ภาคผนวก ข.43

ระเบียบข้อบังคับเกี่ยวกับวิธีการปฏิบัติงานในการใช้หม้อไอน้ำ

ABPR2 Combined Cycle Cogeneration Plant Project

DATE : Feb. 28, 2013

SUPPLEMENTARY COMMUNICATION SHEET for

TITLE OF DOCUMENT	HRSG Operation & Maintenance Manual		
PROJECT CONTROL No	ABPR2-G-S-HA-8504	REV	1
DOCUMENT No	V17460-OMNE-001-006	REV	1

No.	Rev.	CUSTOMER COMMENTS	REPLYS AND EXPLANATION
1	0	Refer the ABP3 corresponding document, its status and changes to that document if any	This document has been prepared based on ABP3's document ABP3-G-S-HA-1001, 1002, 1003, 1004 1005 and 1006. The content and structure is now revised as per the ABP3's document. The details of each sections have been revised as per ABPR2 project requirements and manufacturer's standard.
	1		
	2		
2	0	appropriate considerations should be made for draining any condensate which may accumulate in the cover plate vent piping	Yes.
	1		
	2		

This documentation is CONFIDENTIAL and is INTELLECTUAL PROPERTY of Toshiba Plant Systems & Services Corporation. It must not be copied, loaned or transferred, nor must be disclosed to any third party without their written permission.

OWNER			
Amata B. Grimm Power (Rayong) 2 Limited			
PROJECT			
ABPR2 Combined Cycle Cogeneration Plant Project			
CONTRACTOR			
Sumitomo Corporation			
TITLE			
HRSG Operation & Maintenance Manual			
PROJECT CONTROL NO.	ABPR2-G-S-HA-8504		REV. 1
APPROVED:	Refer to the attached document	JOB NO. KG1000160	SCALE Ref.each sheet	DATE 28th Feb,2013
CHECKED:				
DESIGNED:		DRAWING NO. V17460-OMNE-001-006		REV 1
Toshiba Plant Systems & Services Corporation			

OPERATION
&
MAINTENANCE MANUAL

For

Vogt Power International Inc.
Heat Recovery Steam Generators

For

SPP ABPR Amata City CCCP Project
Amata B. Grimm Power (Rayong) 2 Limited

Vogt Power Project No. 17460

Vogt Document No. V17460-OMNE-001

VOLUME 1

OPERATION & MAINTENANCE MANUAL

For

Vogt Power International, Inc.
Heat Recovery Steam Generators

for

SPP ABPR Amata City CCCP Project
Amata B. Grimm Power (Rayong) 2 Limited

Vogt Power Project No. 17460

Vogt Power Document No. V17460-OMNE-001

Written By: Kathy Hugle

Reviewed By: Matt Kreis

Revision: 1
Date: 19 February 2013

The purpose of this manual is to suggest procedures for the operation and maintenance of the HRSG and its subsidiary parts. This guide does not cover all variations in equipment, nor does it provide for every possible requirement or contingency. The specific site conditions, staffing, accessibility, and interfacing equipment must be considered when implementing the information provided herein.

Refer to the Vogt Power International Erection Manual for specific information concerning unloading, storage, and installation of the equipment. Refer to the Vogt Power International Training Manual for operator training. Should other information be desired, or particular situations arise that are not addressed in this manual, the matter should be referred to Vogt Power International.

This manual describes the HRSG, its components and ancillaries to aid the Owner in its development of appropriate procedures for operating and maintaining the equipment. It also contains specific design and performance information, including drawings, equipment lists, and data sheets, purely for convenience. However, this document is not contractual, and should not be referred to in contractual matters.

This document contains minimum procedures for operating and maintaining the HRSG components and is intended to assist the operators in planning and scheduling operational and maintenance activities. It is not intended to and does not cover all details or variations in equipment, or provide for every possible contingency.

INDEX

VOLUME 1 – Vogt Power HRSG O&M Manual

SECTION I DESIGN DATA

Tab 1 - Drawing and Document List
Tab 2 - System Design Description
Tab 3 - Safety Valve Data
Tab 4 - Performance Data
Tab 5 - Start-up Procedure
Tab 6 - Gas Side Pressure Drop
Tab 7 - Heating Surface Data
Tab 8 - Boiler Feedwater and Boiler Water
Tab 9 - Performance Prediction

SECTION II OPERATIONAL PROCEDURES

Tab 1 - Safety Precautions
Tab 2 - Suggested Operational Procedure
Tab 3 - Removal from Service, Lay-up, and Long Term Storage
Tab 4 - Tube Failure Analysis
Tab 5 - Troubleshooting Procedures
Tab 6 - Maintenance Checklists
Tab 7 - Pressure Part Life
Tab 8 - Warranty, Inspection and Maintenance Reports and Forms

SECTION III COMMISSIONING PROCEDURES

Tab 1 - Preliminary Filling and Flushing
Tab 2 - Hydrostatic Test
Tab 3 - Alkaline Boilout
Tab 4 - Chemical Cleaning
Tab 5 - Steam Blow Cleaning
Tab 6 - Commissioning

SECTION IV SUBVENDOR MANUALS

Volume 2 – Diverter Damper

Volume 3 – Valves and Inline Components

Tab 1 - Control Valves
Tab 2 - Safety Valves
Tab 3 - General Service Valves
Tab 4 - General Service Valve Actuators
Tab 5 - Strainers
Tab 6 - Steam Sample Nozzles
Tab 7 - Instrument Valves
Tab 8 - Attemperators

Volume 4 – Instrumentation

Tab 1 - Transmitters
Tab 2 - Level Gauges and Remote Level Indicators
Tab 3 - Thermocouples & Temperature Indicators
Tab 4 - Pressure Gauges & DP Gauges

Volume 5 – Deaerator & Heat Exchanger

Tab 1 - Deaerator
Tab 2 - Heat Exchanger

Volume 6 – Miscellaneous Equipment

Tab 1 - Outlet Expansion Joints
Tab 2 - Inlet Expansion Joints
Tab 3 - Steam Silencers
Tab 4 - Pipe Supports
Tab 5 - Flow Elements
Tab 6 - Aircraft Warning Lights
Tab 7 - Stack Silencers

1.0 DRAWING AND DOCUMENT LIST

1.1. Drawing List

V17460-EBND-200	Steam Drum Manway Gasket Installation & Bolting Procedure
V17460-FLND-001	HRSG Foundation Diagram
V17460-GAND-001	General Arrangement – Right Side Elevation
V17460-GAND-002	General Arrangement – Left Side Elevation
V17460-GAND-003	General Arrangement – Plan View
V17460-ICND-001	P&ID Legend and General Notes
V17460-ICND-002	Flue Gas P&ID
V17460-ICND-003	High Pressure P&ID
V17460-ICND-004	Low Pressure P&ID
V17460-ICND-005	DA, Storage Tank, and Heat Exchanger P&ID
V17460-ICND-006	Blowdown, Silencers, PSV Vents & Drains P&ID
V17460-SEND-001	Boiler Setting – Right Side Sectional Elevation
V17460-SEND-002	Boiler Setting – Sections “A” & “B”
V17460-SEND-003	Boiler Setting – Plan Section

1.2 Document List

V17460-ICNA-001	Line List
V17460-ICNA-002	Terminal Point List
V17460-ICNA-003	Valve List
V17460-ICNA-004	Instrument List
V17460-SENF-001	General Notes and Data

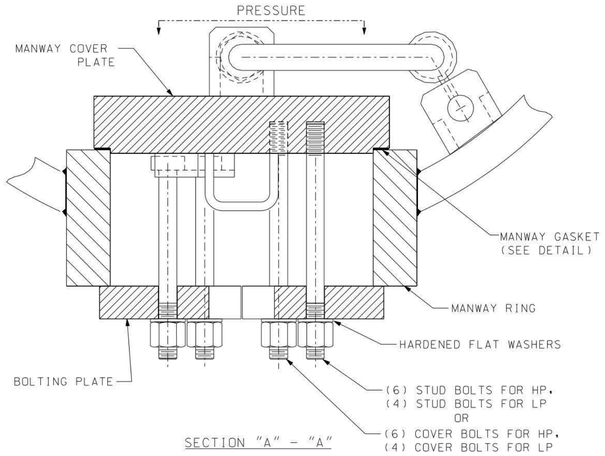

SECTION "A" - "A"

HP STEAM DRUM MANWAY GASKET:

SHIPPING.....BLUE MAX (OR NON-METALLIC)
HYDROSTATIC TEST....SPIRAL WOUND
CHEMICAL CLEAN.....BLUE MAX (OR NON-METALLIC)
BOILER OPERATION....SPIRAL WOUND

MANWAY MATERIAL AND SIZE:

14" x 18"
MANWAY RING.....SA105 or SA516-70
MANWAY COVER.....SA105 or SA516-70
MANWAY GASKET....(SEE MANWAY GASKET)
BOLTING PLATE.....A516-70
STUD BOLT.....A193-B7
HVY. HEX NUT.....A194-2H
WASHER.....ASTM F436

DRUM	VPI GASKET STOCK #	GASKET DESCRIPTION	NOMINAL DIAMETER OF BOLT (inches)	NUMBER OF THREADS (Per inch)	Torque - Ft-Lbs			
					Stage 1*	Stage 2	Stage 3	Stage 4
HP	12-4124	14" x 18" x 1 1/8" INCLUDING 1/4" INNER RING SPW TYPE 304	1-1/2	8	390	780	1300	1300-1400
LP	12-4122	14" x 18" x 1" TYPE 800-T BLUE MAX (300#)	1-3/8	8	54	108	180	180-205

* - no more than 30% of required bolt stress should be achieved on stage 1.

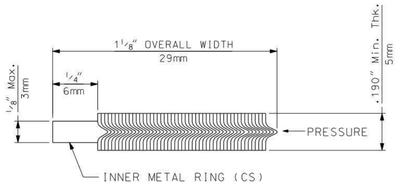

HP METALLIC SPIRAL WOUND GASKET
MATERIAL: TYPE 304 SS W/GRAPHITE FILLER

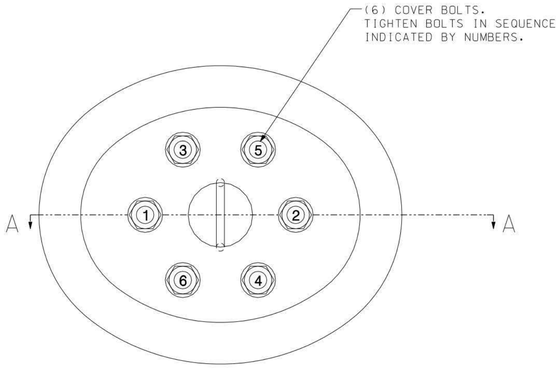

HP MANWAY DOOR - FRONT VIEW

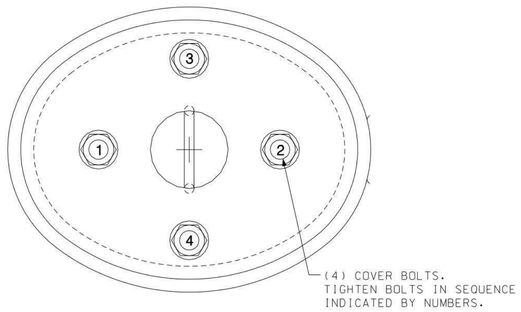

LP MANWAY DOOR - FRONT VIEW

INSPECTION AND ASSEMBLY PROCEDURE:

PERFORMANCE OF ANY GASKET IS NOT SOLELY DEPENDENT ON THE GASKET ITSELF BUT ON A COMBINATION OF VARIABLES, MANY OF WHICH ARE OUTSIDE THE CONTROL OF THE GASKET MANUFACTURER. EXPERIENCE HAS SHOWN THAT LEAKAGE IS NOT NECESSARILY AN INDICATION OF A FAULTY GASKET, BUT IS MORE LIKELY TO BE A RESULT OF IMPROPER INSTALLATION, ASSEMBLY OR BOLTING PROCEDURE, DAMAGED GASKET SEATS , OR A COMBINATION OF VARIABLES THAT COMPRISE A BOLTED-GASKET ASSEMBLY.

WHEN INSTALLING A GASKET, CERTAIN ASSEMBLY PROCEDURES ARE EMPLOYED, THUS INSURING THAT THE OPTIMUM QUALITY OF SEAL IS ACHIEVED. THIS PROCEDURE SHOULD BE EMPLOYED EACH AND EVERY TIME A GASKED IS FITTED, WHATEVER THE TIGHTENING TECHNIQUE. NEVER INSTALL A PREVIOUSLY USED GASKET. A NEW GASKET MUST BE INSTALLED AFTER EACH TIME A MANWAY COVER HAS BEEN OPENED.

1. ENSURE THAT THE GASKET IS KEPT ON ITS BACKING BOARD, STORED HORIZONTALLY, UNTIL IMMEDIATELY PRIOR TO ASSEMBLY. INSPECT THE GASKET. CHECK THAT THE GASKET'S TYPE, STYLE AND MATERIALS ARE CORRECT. CHECK FOR DEFECTS AND POSSIBLE MECHANICAL DAMAGE. IF IN DOUBT - CHECK !!!

2. EXAMINE THE MANWAY ASSEMBLY. ENSURE THAT ALL SEATING FACES ARE CLEAN, FREE OF IMPERFECTION AND ARE TRUE. MAKE SURE THE SEATING SURFACES HAVE SIMILAR CONCENTRIC/ PHONOGRAPHIC FINISHES. SURFACES TO BE USED WITH SPIRAL WOUND GASKETS ARE TO BE FINISHED TO 125 - 250 RMS. AND TO BE FLAT WITHIN 0.005".

   a) ANY SEATING SURFACE DAMAGE IS A POTENTIAL LEAK PATH AND THEREFORE MUST BE AVOIDED IF AT ALL POSSIBLE. IF PITS GREATER THAN 3/16" IN DIAMETER, OR RADIAL TOOL MARKS, DIMPLES, CUTS AND SCRATCHES DEEPER THAN 0.010" EXIST, IT WILL BE NECESSARY TO REPAIR THE SEATING SURFACES BY WELDING AND GRINDING UNDER THE DIRECTION OF YOUR ASME NATIONAL BOARD INSPECTOR. FOR SUBSEQUENT DAMAGE IT MAY BE NECESSARY TO REPLACE THE MANWAY COVER WITH A NEW ONE, OR HAVE MANWAY RING SURFACE RE-MACHINED.

   b) IT MUST ALWAYS BE ENSURED THAT A GASKET IS EVENLY COMPRESSED TO WITHIN LIMITS. IF THE SEATING FACES ARE CONVEX, CONCAVE OR SIMPLY OUT OF PARALLEL, THAN THE GASKET SEALING PERFORMANCE WILL BE SUBSEQUENTLY AFFECTED DUE TO THE RESULTANT UNEVEN COMPRESSION.

3. EXAMINE ALL STUDS OR BOLTS, AND MATING NUTS. ENSURE THAT THEY ARE THE CORRECT MATERIAL. CHECK THREADS IN MANWAY COVER, CHECK FOR ANY DAMAGE, GALLING, PITTING, THREAD DAMAGE ETC. USE A TAP AND DIE TO CLEAN OR REPAIR THREADS. WHERE NECESSARY, REPLACE THE DAMAGED ITEMS.

4. LUBRICATE ALL STUD OR BOLT THREADS AND NUT FACES IN ORDER TO REDUCE AND CONTROL FRICTION BETWEEN LOAD BEARING SURFACES. GASKET MANUFACTURERS RECOMMEND THE USE OF MOLYBDENUM DISULFIDE OR SIMILAR NICKEL BASED COMPOUND OR USE A HEAVY GRAPHITE AND OIL LUBRICATION MIXTURE.

5. LOCATE THE GASKET CENTRALLY WITHIN THE COVER'S SEATING SURFACE. A LIGHT SPRAY OF AN ADHESIVE SUCH AS 3M77 CAN BE USED TO HOLD THE GASKET IN PLACE. DO NOT USE ANY GASKET COMPOUNDS. UNDER NO CIRCUMSTANCES FORCE THE GASKET INTO POSITION.

6. BRING THE COVER AND GASKET TO THE MANWAY RING. INSTALL ALL THE BOLTS. ENSURE THAT THEY ARE CLEAN AND WELL LUBRICATED. RUN UP ALL THE NUTS FINGER TIGHT TO ALLOW COVER AND GASKET TO STAY IN PLACE. IT MAY BE NECESSARY TO USE A PRY BAR TO LIFT THE COVER AND GASKET SO THAT THEY ARE CENTERED. TIGHTEN THE BOLTS BY TURNING THE NUTS ONE (1) FLAT AT A TIME FOLLOWING THE TIGHTENING SEQUENCE SHOWN IN "FRONT VIEW". REPEAT THIS PROCESS UNTIL ALL BOLTS ARE TIGHT OR APPROXIMATELY 40 FT-LBS.

7. PROCEED WITH THE TIGHTENING PROCEDURE.

TIGHTENING PROCEDURE USING THE TORQUE METHOD:

AFTER COMPLETING THE INSPECTION AND ASSEMBLY PROCEDURE, YOU MAY START TIGHTENING USING THE VALUES AS SHOWN IN TORQUE DATA TABLE AND FOLLOWING THE ALTERNATING SEQUENCE AS SHOWN IN "FRONT VIEW". IN ORDER TO GENERATE THE APPROPRIATE BOLT STRESS, ONE OF THE FOLLOWING TOOLS MUST BE USED: TORQUE WRENCH/MULTIPLIER OR HYDRAULIC STUD TENSIONERS.REQUIRED BOLT STRESS MUST BE DEVELOPED IN A MINIMUM OF FOUR STAGES IN ORDER TO ALLOW EVEN GASKET COMPRESSION AND MINIMIZE GASKET DAMAGE AND SUBSEQUENT BOLT RELAXATION.

STAGE 1 - TIGHTEN BOLTS IN STEPS TO KEEP THE GASKET FROM WALKING. TORQUE BOLTS UP TO APPROXIMATELY 30% OF THE FINAL TORQUE VALUE.

STAGE 2 - REPEAT BOLTING SEQUENCE, INCREASING THE TORQUE VALUE TO APPROXIMATELY 60% OF THE FINAL TORQUE VALUE.

STAGE 3 - REPEAT BOLTING SEQUENCE, INCREASING THE TORQUE VALUE TO THE FINAL REQUIRED TORQUE VALUE.

STAGE 4 - AFTER THE UNIT IS UP TO PRESSURE AND TEMPERATURE AND HAS BEEN OPERATING RELIABLY, RE-TORQUE TO ENSURE THAT ALL BOLTS HAVE BEEN EVENLY STRESSED TO THE SPECIFIED TORQUE VALUES.

CAUTION: AS A SAFETY PRECAUTION, TIGHTENING OF THE MANWAY STUDS WHILE THE UNIT IS UNDER PRESSURE SHOULD BE DONE FROM THE SIDE OF THE MANWAY.

VOGT POWER INTERNATIONAL
For Construction / Fabrication
Hugle, Kathy | Apr-07-2012

REFERENCE DRAWINGS:
V17460-SDND-007 - MANWAY ASSEMBLY FOR HP DRUM
V17460-LSND-007 - MANWAY ASSEMBLY FOR LP DRUM

Rev.	Description	Date	Drawn	Chkd. 1	Chkd. 2	Appr.
05						
04						
03						
02						
01	REVISE TITLE BLOCK	31-AUG-11	EJ	GRP		DP
00	FIRST ISSUE	30-JUN-11	RN	GRP		DP

Revisions

This drawing contains Vogt Power International's confidential and proprietary information and cannot be used, duplicated or disclosed in whole or in part, except with the express written permission of Vogt Power International. EXCEPT AS EXPRESSLY STATED IN ANY WRITTEN CONTRACT - ALL WARRANTIES RELATING TO THIS DRAWING, INCLUDING THE WARRANTIES OF MERCHANTABILITY AND FITNESS, ARE DISCLAIMED.
© Vogt Power International, Inc. all rights reserved as an unpublished work.

OWNER
Amata B. Grimm Power (Rayong) 2 Limited

PROJECT
ABPR2 Combined Cycle Cogeneration Plant Project

CONTRACTOR
Sumitomo Corporation

TITLE
STEAM DRUM MANWAY GASKET INSTALLATION & BOLTING PROCEDURE

PROJECT CONTROL NO. ABPR2-M-S-HA-0085 REV. 1

Vogt Power International
4000 DuPont Circle
Louisville, Ky. 40207 USA
www.VogtPower.com

3rd ANGLE PROJECTION
Scale: NONE

Internal Drawing Status	Size	Drawing No.	Rev.
FOR RECORD	A1	V17460-EBND-200	01

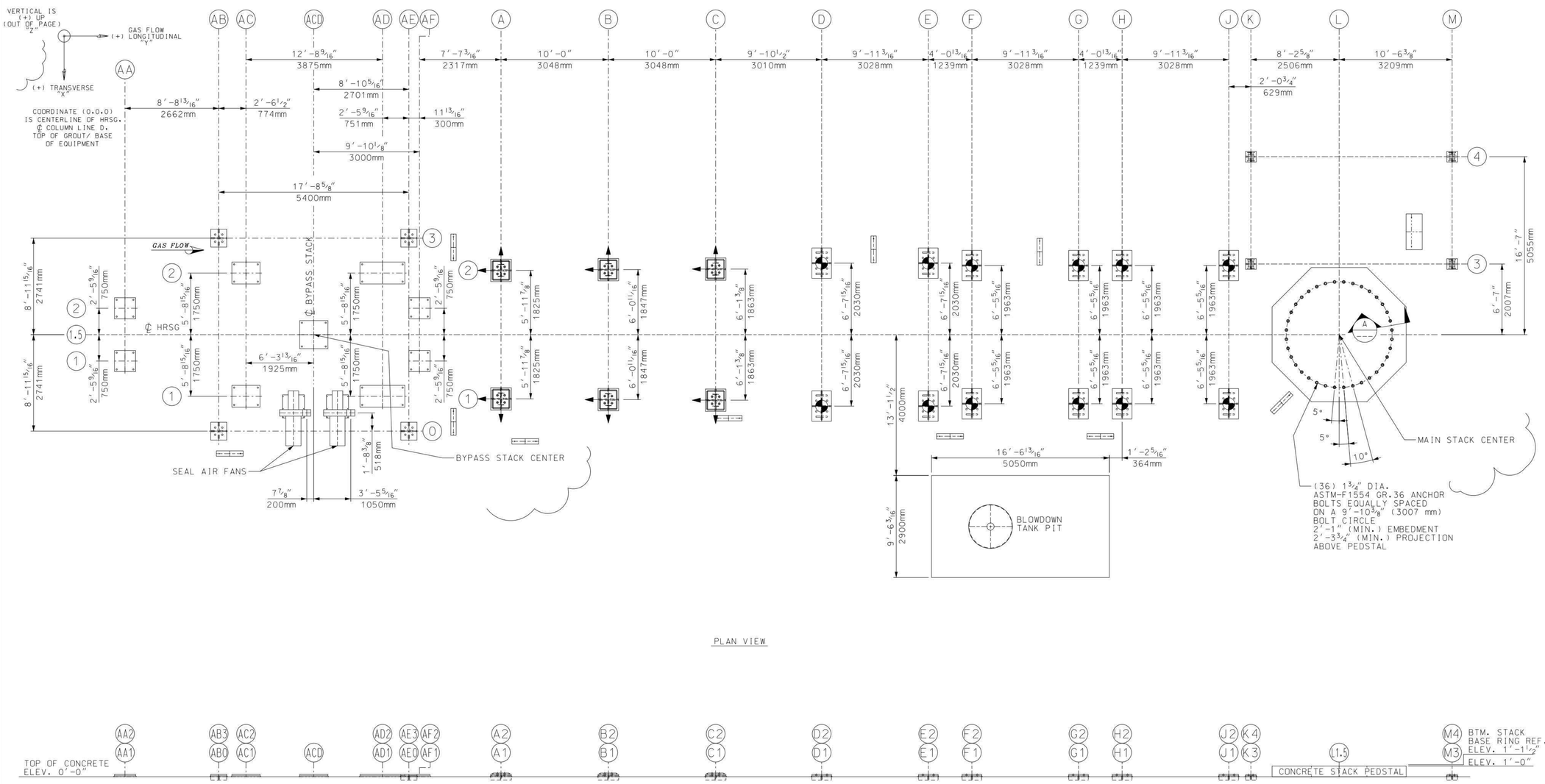

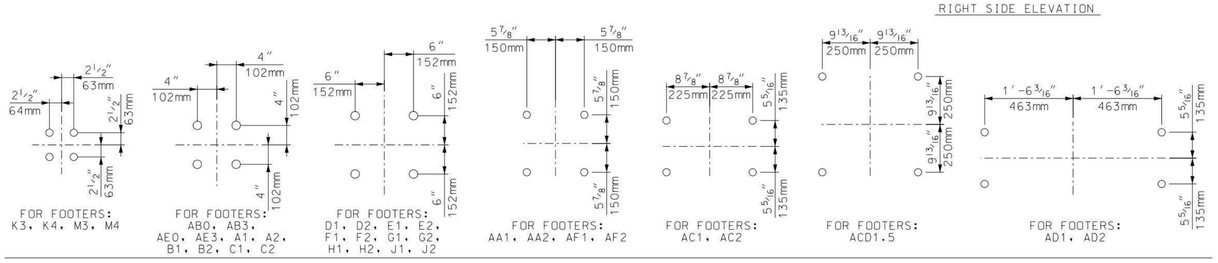

ANCHOR BOLT PATTERNS

SCALE: 3/4"=1'

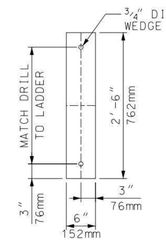

LOCATION FOR LADDERS ANCHOR

SCALE: 3/4"=1'

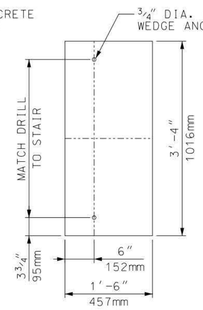

LOCATION FOR STAIRWAY ANCHOR

SCALE: 3/4"=1'

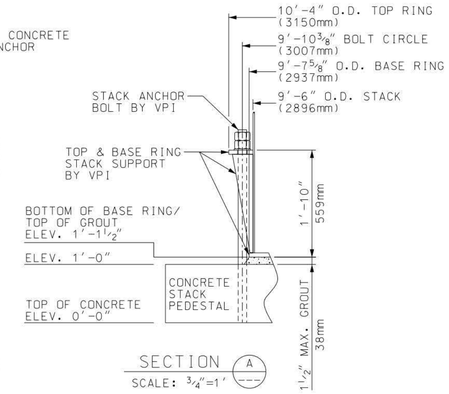

SECTION A

SCALE: 3/4"=1'

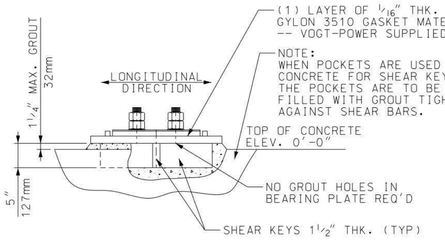

ANCHOR BOLT PATTERNS

FOR INLET DUCT FOOTERS (A1, A2, B1, B2, C1, C2) LOCATED IN THE TRANSVERSE & LONGITUDINAL DIRECTIONS ON ALL FOOTINGS

SCALE: 3/4"=1'

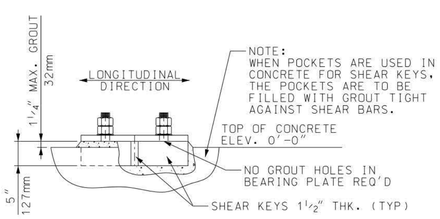

ANCHOR BOLT PATTERNS

FOR BOILER FOOTERS (D1, D2, E1, E2, F1, F2, G1, G2, H1, H2, J1, J2)
FOR BYPASS STACK FOOTERS (AB0, AB3, AE0, AE3)
FOR STAIR TOWER FOOTERS (K3, K4, M3, M4)
LOCATED IN THE TRANSVERSE & LONGITUDINAL DIRECTIONS ON ALL FOOTINGS

SCALE: 3/4"=1'

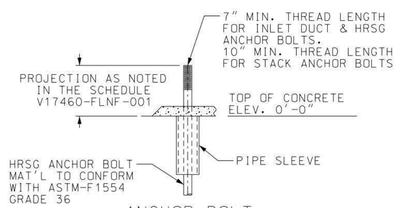

ANCHOR BOLT

SCALE: NONE

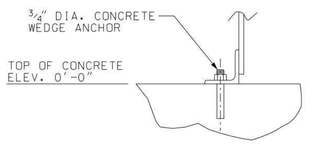

ANCHOR BOLT DETAIL LADDERS & STAIWAYS

SCALE: NONE

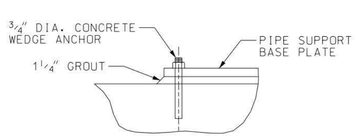

ANCHOR BOLT DETAIL PIPE SUPPORTS

SCALE: NONE

GENERAL NOTES:

1. THIS IS NOT A WORKING DRAWING. FOOTINGS, REINFORCING STEEL, ETC., ARE BY OTHERS. FOOTING SIZES ARE TO BE DETERMINED TO SUIT SOIL CONDITIONS & LOADS.
2. DO NOT SCALE THIS DRAWING. USE FIGURE DIMENSIONS ONLY.
3. VOGT POWER IS NOT RESPONSIBLE FOR DEFECTS IN NOR FAILURE OF FOUNDATIONS UNLESS SAME IS PART OF CONTRACT.
4. ALL ANCHOR BOLTS TO BE SET IN PIPE SLEEVES (OR EQUAL).
5. FOR STANDARD BASE PLATE ASSEMBLIES & DETAILS SEE DWG V17460-BPND-001.
6. SUGGESTED GROUT MATERIAL IS "EMBECO 636" OR EQUAL. TO BE INSTALLED ACCORDING TO MANUFACTURER'S INSTRUCTIONS. (GROUT NOT FURNISHED BY VOGT-POWER). FOUNDATION SURFACE MUST BE PREPARED PRIOR TO SETTING BEARING / BASE PLATES.
7. ⊕ DENOTES FIXED POINT.
8. ⟶ DENOTES DIRECTION OF MOVEMENT DUE TO THERMAL EXPANSION AT INLET BASE PLATES.
9. ALL BASE & BEARING PLATES TO BE SANDBLASTED PER SSPC-SP-6. SURFACES TO HAVE A COATING OF CARBOWELD II WELDABLE ZINC RICH PRIMER APPLIED.
10. ====== DENOTES SHEAR BAR LOCATIONS.
11. INSTALLER SHOULD TAKE SPECIAL CARE WHEN GROUTING BASE & BEARING PLATES. GROUT IS TO COME TO THE BOTTOM OF BEARING PLATES. DO NOT GROUT AROUND BASE & BEARING PLATES. MAKE SURE THAT NO GROUT IS APPLIED IN THE ANCHOR BOLT HOLES IN THE BASE PLATES.
12. ALL WASHERS THICKNESSES FOR ANCHOR BOLTS ARE TO BE PER TABLE 14-2 OF AISC 13TH EDITION. ALL ANCHOR BOLTS TO BE TIGHTENED TO 5 FT/LB (FINGER TIGHT) EXCEPT BEARING PLATE ASSEMBLY DENOTED AT FIXED POINT. ⊕ THESE ANCHOR BOLTS ARE TO BE TIGHTENED PER AISC "TURN OF THE NUT STANDARD". TURN NUT SNUG. DO NOT CUP WASHERS WHEN TIGHTENING.
13. SEE DOC. V17460-FLNF-001 FOR FOUNDATION LOADING SCHEDULE.
14. ANCHOR BOLT TOLERANCES:
    a) 1/8"(3mm) CENTER TO CENTER OF ANY TWO BOLTS WITHIN AN ANCHOR BOLT GROUP.
    b) 1/4"(6mm) CENTER TO CENTER OF ADJACENT ANCHOR BOLT GROUPS.
    c) MAX. ACCUMULATION OF 1/4"(6mm) BETWEEN COLUMN LINES.
    d) MAX. ACCUMULATION OF 1/4"(6mm) FROM ℄ OF STEAM GENERATOR ALONG ANY COLUMN.
    e) ± 1/4"(6mm) OF THEORETICAL ELEVATION.
15. STACK ANCHOR BOLTS ARE TO BE UNIFORMLY SPACED AROUND BOLT CIRCLE AND ARE TO STRADDLE LONGITUDUNAL & TRANSVERSE ℄'S OF STACK (SEE FOUNDATION LOADING SCHEDULE FOR NUMBER REQUIRED).
16. THE FOUNDATION DESIGNER SHOULD TAKE SPECIAL CARE WHEN DESIGNING THE STACK FOUNDATION DUE TO THE LARGE TENSILE LOADS ON THE ANCHOR BOLTS CAUSED BY THE HIGH WIND AND SEISMIC MOMENT.

VOGT POWER INTERNATIONAL

For Construction / Fabrication

Hugle, Kathy	Apr-11-2012

REFERENCE DRAWINGS:

V17460-GAND-001 THRU 003: GENERAL ARRANGEMENTS ABPR2-M-S-HA-0125 THRU 0127

V17460-SEND-001 THRU 003: BOILER SETTINGS ABPR2-M-S-HA-0685 THRU 0687

V17460-ICND-001 THRU 006: P&ID's ABPR2-M-S-PD-0135 THRU 0140

V17460-BPND-001: BASE AND BEARING PLATE ASSEMBLIES ABPR2-G-S-HA-0025

V17460-FLNF-001: HRSG FOUNDATION LOAD TABLE ABPR2-C-S-HA-0121

Rev.	Description	Date	Drawn	Chkd. 1	Chkd. 2	Appr.
05						
04						
03						
02	REVISE PER CUST. COMMENTS	24-FEB-12	GRP	KH		DP
01	REVISE TITLE BLOCK	31-AUG-11	SK	GRP		DP
00	FIRST ISSUE	27-JUN-11	RN	GRP		DP

Revisions

This drawing contains Vogt Power International's confidential and proprietary information and cannot be used, duplicated or disclosed in whole or in part, except with the express written permission of Vogt Power International. EXCEPT AS EXPRESSLY STATED IN ANY WRITTEN CONTRACT - ALL WARRANTIES RELATING TO THIS DRAWING, INCLUDING THE WARRANTIES OF MERCHANTABILITY AND FITNESS, ARE DISCLAIMED. ©Vogt Power International, Inc. all rights reserved as an unpublished work.

OWNER: Amata B. Grimm Power (Rayong) 2 Limited

PROJECT: ABPR2 Combined Cycle Cogeneration Plant Project

CONTRACTOR: Sumitomo Corporation

TITLE: H.R.S.G. FOUNDATION DIAGRAM

PROJECT CONTROL NO. ABPR2-M-S-HA-0120 REV. 2

Vogt Power International, 4000 DuPont Circle, Louisville, Ky. 40207 USA, www.VogtPower.com

3rd ANGLE PROJECTION

Scale: 3/4" = 1'-0"

Internal Drawing Status	Size	Drawing No.	Rev.
FOR RECORD	A1	V17460-FLND-001	02

V17460-FLND-001-02.dgn 4/7/2012 2:14:56 PM

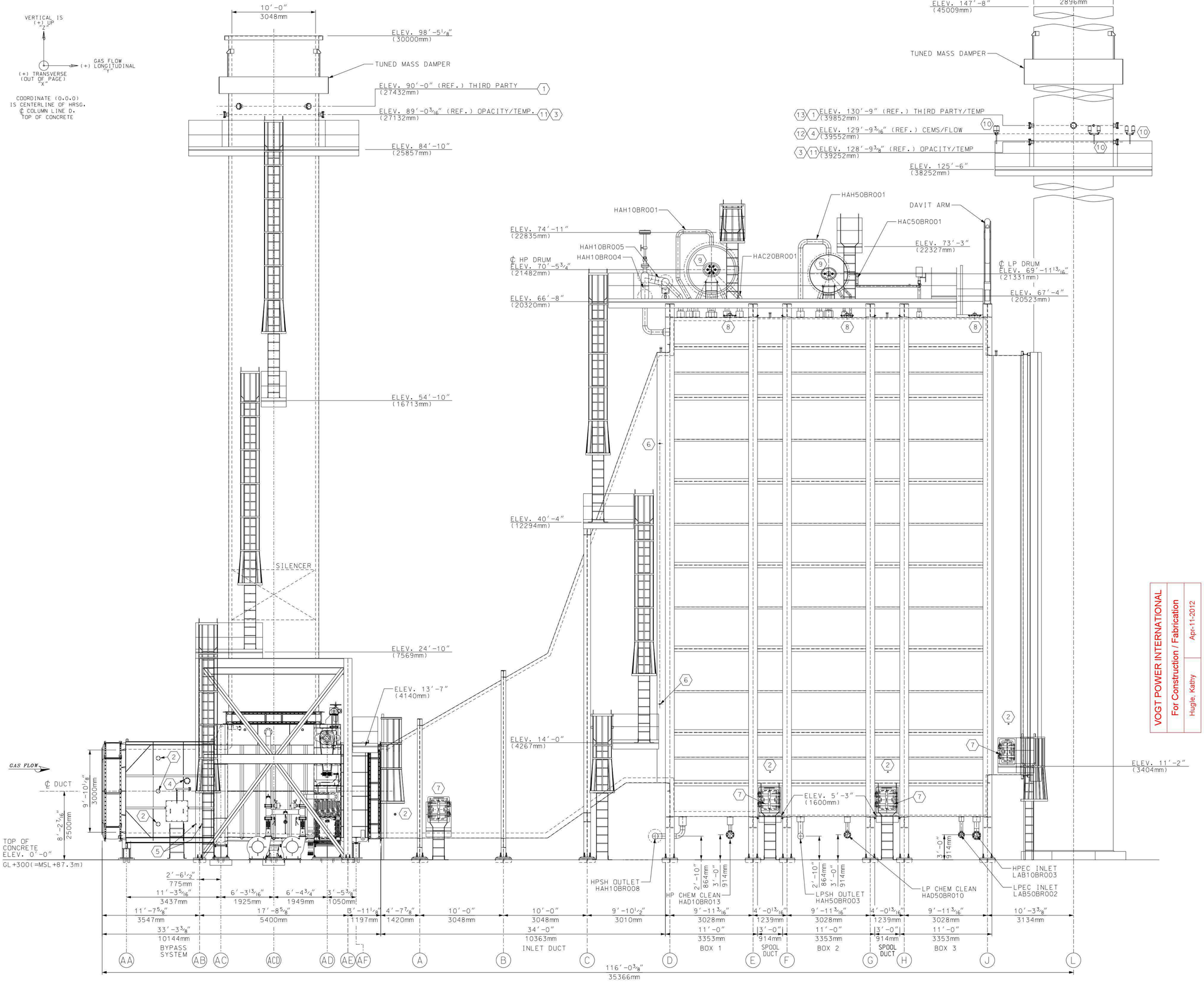

MARK NO.	QTY.	CONN. SIZE	DESCRIPTION
1	4 PER STACK	4″-150#	THIRD PARTY PORT
2	10	2″-150#	TEST PORT
3	1 PER STACK	1 1/2″-150#	OUTLET STACK THERMOWELL
4	2	4″-150#	CEMS PORT
5	4	1″-3000#	GAS PATH PRESS PORT
6	4	2″-3000#	GAS PATH THERMOWELL
7	4	18″ x 24″	ACCESS DOOR
8	3	14″ x 18″	INSPECTION DOOR (BOLTED)
9	2 PER DRUM	14″ x 18″	DRUM MANWAY
10	3	N/A	FAA LIGHTS
11	2 PER STACK	4″-150#	OPACITY PORT
12	1	DN65 PN6	FLOW PORT
13	2	2″-3000#	OUTLET STACK THERMOWELL

REFERENCE DRAWINGS:

V17460-GAND-001 THRU 003: GENERAL ARRANGEMENTS
ABPR2-M-S-HA-0125 THRU 0127

V17460-SEND-001 THRU 003: BOILER SETTINGS
ABPR2-M-S-HA-0685 THRU 0687

V17460-ICND-001 THRU 006: P&ID's
ABPR2-M-S-PD-0135 THRU 0140

V17460-FLND-001: FOUNDATION DIAGRAM
ABPR2-M-S-HA-0120

VOGT POWER INTERNATIONAL
For Construction / Fabrication
Hugle, Kathy
Apr-11-2012

Rev.	Description	Date	Drawn	Chkd. 1	Chkd. 2	Appr.
05						
04						
03						
02	CUSTOMER COMMENTS	24-FEB-12	GRP	KH		DP
01	REVISE TITLE BLOCK	31-AUG-11	SK	GRP		DP
00	FIRST ISSUE	27-JUN-11	RN	GRP		DP

Revisions

This drawing contains Vogt Power International's confidential and proprietary information and cannot be used, duplicated or disclosed in whole or in part, except with the express written permission of Vogt Power International. EXCEPT AS EXPRESSLY STATED IN ANY WRITTEN CONTRACT - ALL WARRANTIES RELATING TO THIS DRAWING, INCLUDING THE WARRANTIES OF MERCHANTABILITY AND FITNESS, ARE DISCLAIMED.
© Vogt Power International, Inc. all rights reserved as an unpublished work.

OWNER
Amata B. Grimm Power (Rayong) 2 Limited

PROJECT
ABPR2 Combined Cycle Cogeneration Plant Project

CONTRACTOR
Sumitomo Corporation

TITLE
HRSG GENERAL ARRANGEMENT
RIGHT SIDE ELEVATION

PROJECT CONTROL NO. ABPR2-M-S-HA-0125 REV. 2

Vogt Power International
4000 DuPont Circle
Louisville, Ky. 40207 USA
www.VogtPower.com

3rd ANGLE PROJECTION
Scale: 3/16″ = 1′-0″

Internal Drawing Status	Size	Drawing No.	Rev.
FOR RECORD	A1	V17460-GAND-001	02

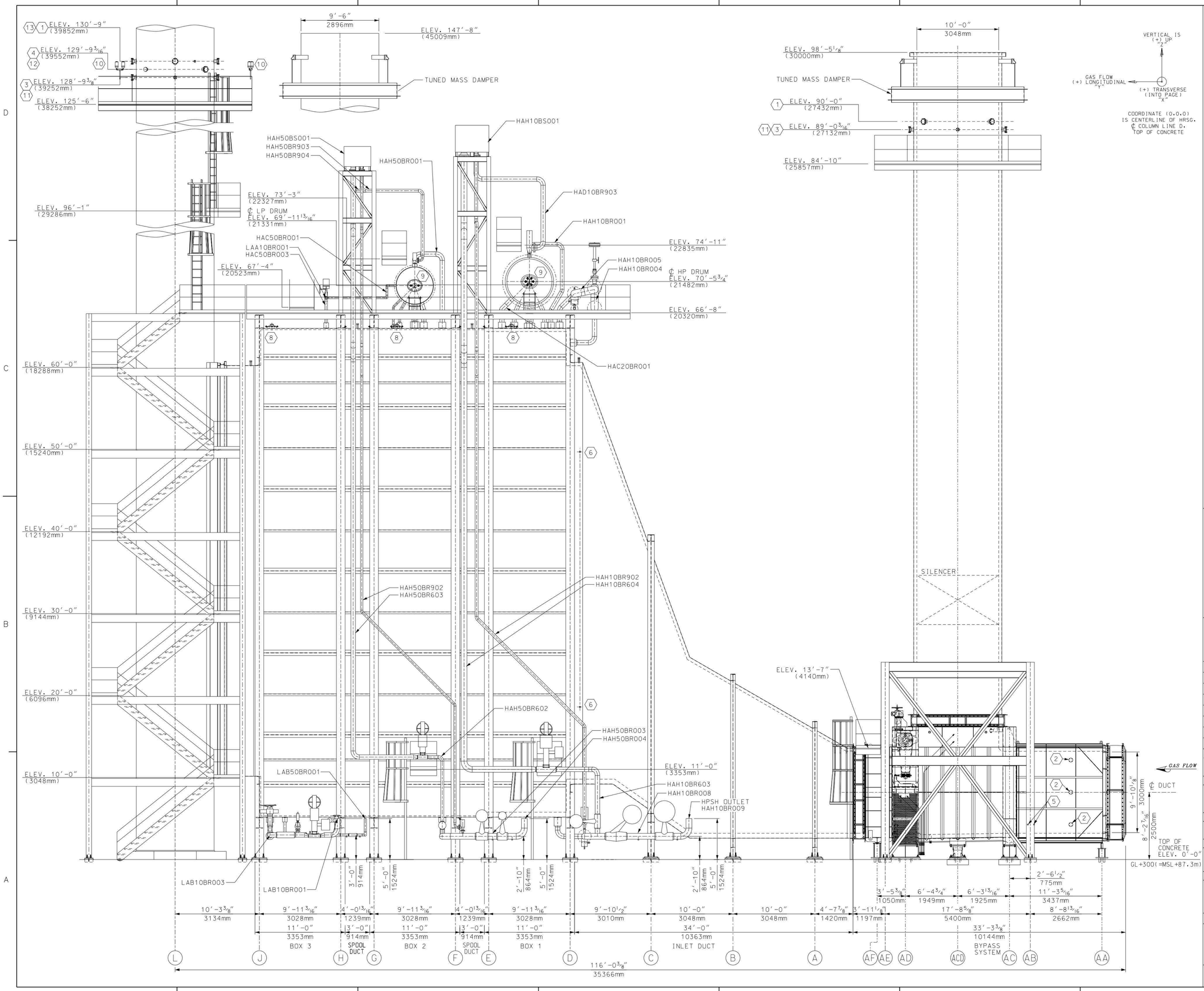

MARK NO.	QTY.	CONN. SIZE	DESCRIPTION
1	4 PER STACK	4"-150#	THIRD PARTY PORT
2	10	2"-150#	TEST PORT
3	1 PER STACK	1 1/2"-150#	OUTLET STACK THERMOWELL
4	2	4"-150#	CEMS PORT
5	4	1"-3000#	GAS PATH PRESS PORT
6	4	2"-3000#	GAS PATH THERMOWELL
7	4	18" x 24"	ACCESS DOOR
8	3	14" x 18"	INSPECTION DOOR (BOLTED)
9	2 PER DRUM	14" x 18"	DRUM MANWAY
10	3	N/A	FAA LIGHTS
11	2 PER STACK	4"-150#	OPACITY PORT
12	1	DN65 PN6	FLOW PORT
13	2	2"-3000#	OUTLET STACK THERMOWELL

VOGT POWER INTERNATIONAL

For Construction / Fabrication

Hugle, Kathy | Apr-11-2012

REFERENCE DRAWINGS:

V17460-GAND-001 THRU 003: GENERAL ARRANGEMENTS ABPR2-M-S-HA-0125 THRU 0127

V17460-SEND-001 THRU 003: BOILER SETTINGS ABPR2-M-S-HA-0685 THRU 0687

V17460-ICND-001 THRU 006: P&ID's ABPR2-M-S-PD-0135 THRU 0140

V17460-FLND-001: FOUNDATION DIAGRAM ABPR2-M-S-HA-0120

Rev.	Description	Date	Drawn	Chkd. 1	Chkd. 2	Appr.
05						
04						
03						
02	CUSTOMER COMMENTS	24-FEB-12	GRP	KH		DP
01	REVISE TITLE BLOCK	31-AUG-11	SK	GRP		DP
00	FIRST ISSUE	27-JUN-11	RN	GRP		DP

Revisions

This drawing contains Vogt Power International's confidential and proprietary information and cannot be used, duplicated or disclosed in whole or in part, except with the express written permission of Vogt Power International. EXCEPT AS EXPRESSLY STATED IN ANY WRITTEN CONTRACT - ALL WARRANTIES RELATING TO THIS DRAWING, INCLUDING THE WARRANTIES OF MERCHANTABILITY AND FITNESS, ARE DISCLAMED. ©Vogt Power International, Inc. all rights reserved as an unpublished work.

OWNER: Amata B. Grimm Power (Rayong) 2 Limited

PROJECT: ABPR2 Combined Cycle Cogeneration Plant Project

CONTRACTOR: Sumitomo Corporation

TITLE: HRSG GENERAL ARRANGEMENT LEFT SIDE ELEVATION

PROJECT CONTROL NO. ABPR2-M-S-HA-0126 | REV. 2

Vogt Power International — 4000 DuPont Circle, Louisville, Ky. 40207 USA, www.VogtPower.com

3rd ANGLE PROJECTION

Scale: 3/16" = 1'-0"

Internal Drawing Status	Size	Drawing No.	Rev.
FOR RECORD	A1	V17460-GAND-002	02

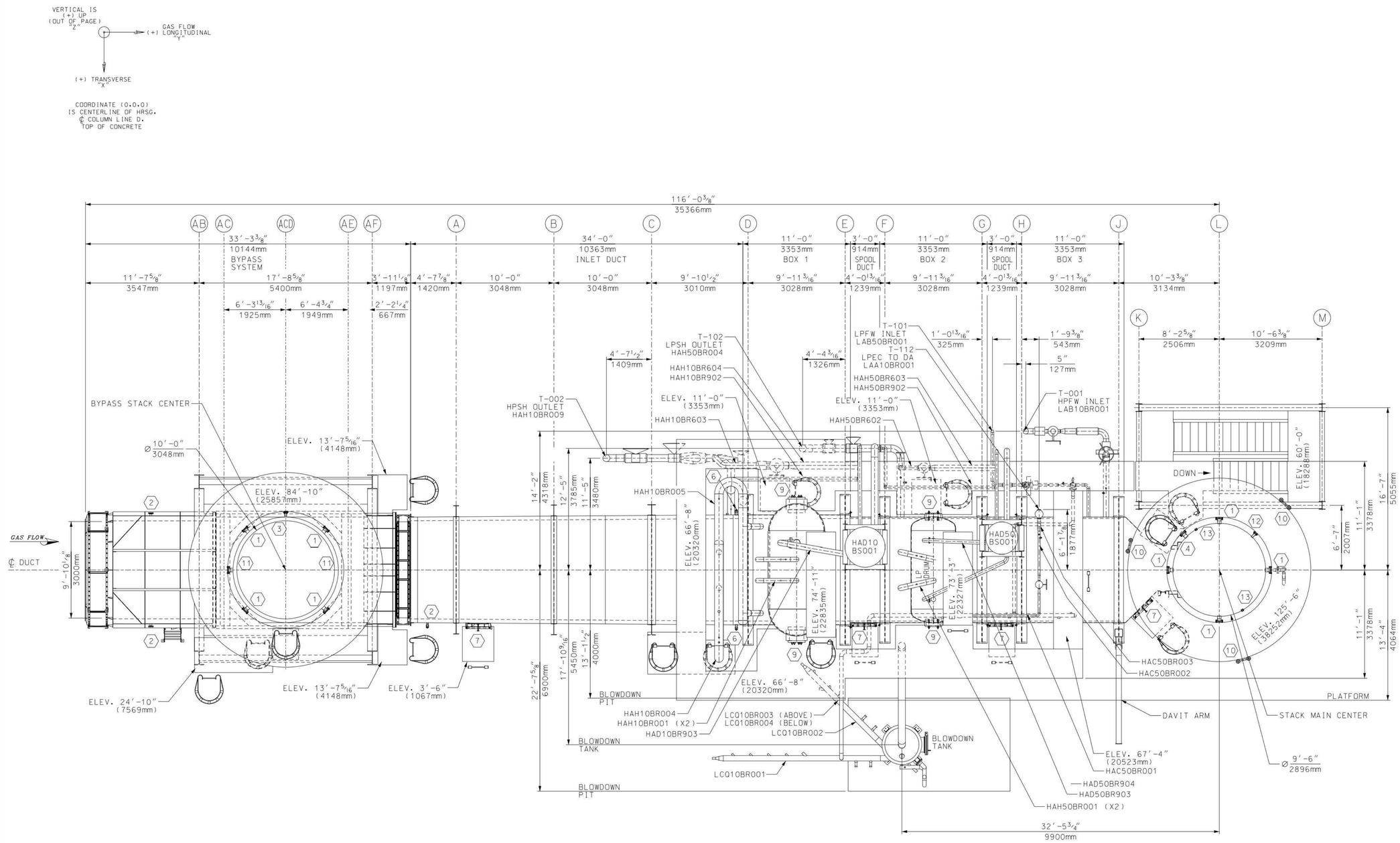

MARK NO.	QTY.	CONN. SIZE	DESCRIPTION
1	4 PER STACK	4″-150#	THIRD PARTY PORT
2	10	2″-150#	TEST PORT
3	1 PER STACK	1 1/2″-150#	OUTLET STACK THERMOWELL
4	2	4″-150#	CEMS PORT
5	4	1″-3000#	GAS PATH PRESS PORT
6	4	2″-3000#	GAS PATH THERMOWELL
7	4	18″ x 24″	ACCESS DOOR
8	3	14″ x 18″	INSPECTION DOOR (BOLTED)
9	2 PER DRUM	14″ x 18″	DRUM MANWAY
10	3	N/A	FAA LIGHTS
11	2 PER STACK	4″-150#	OPACITY PORT
12	1	DN65 PN6	FLOW PORT
13	2	2″-3000#	OUTLET STACK THERMOWELL

REFERENCE DRAWINGS:

V17460-GAND-001 THRU 003: GENERAL ARRANGEMENTS
ABPR2-M-S-HA-0125 THRU 0127

V17460-SEND-001 THRU 003: BOILER SETTINGS
ABPR2-M-S-HA-0685 THRU 0687

V17460-ICND-001 THRU 006: P&ID's
ABPR2-M-S-PD-0135 THRU 0140

V17460-FLND-001: FOUNDATION DIAGRAM
ABPR2-M-S-HA-0120

Rev.	Description	Date	Drawn	Chkd. 1	Chkd. 2	Appr.
05						
04						
03						
02	CUSTOMER COMMENTS	24-FEB-12	GRP	KH		DP
01	REVISE TITLE BLOCK	31-AUG-11	SK	GRP		DP
00	FIRST ISSUE	27-JUN-11	RN	GRP		DP

Revisions

This drawing contains Vogt Power International's confidential and proprietary information and cannot be used, duplicated or disclosed in whole or in part, except with the express written permission of Vogt Power International.
EXCEPT AS EXPRESSLY STATED IN ANY WRITTEN CONTRACT - ALL WARRANTIES RELATING TO THIS DRAWING, INCLUDING THE WARRANTIES OF MERCHANTABILITY AND FITNESS, ARE DISCLAIMED.
© Vogt Power International, Inc. all rights reserved as an unpublished work.

OWNER
Amata B. Grimm Power (Rayong) 2 Limited

PROJECT
ABPR2 Combined Cycle Cogeneration Plant Project

CONTRACTOR
Sumitomo Corporation

TITLE
HRSG GENERAL ARRANGEMENT
PLAN VIEW

PROJECT CONTROL NO. ABPR2-M-S-HA-0127 REV. 2

Vogt Power International
4000 DuPont Circle
Louisville, Ky. 40207 USA
www.VogtPower.com

3rd ANGLE PROJECTION
Scale: 3/4″ = 1′-0″

Internal Drawing Status	Size	Drawing No.	Rev.
FOR RECORD	A1	V17460-GAND-003	02

VOGT POWER INTERNATIONAL	
For Construction / Fabrication	
Hugle, Kathy	Apr-11-2012

PROCESS PIPING SYMBOLS VALVES

- GATE VALVE, NORMALLY OPEN
- GATE VALVE, NORMALLY CLOSED
- BUTTERFLY VALVE
- CHECK VALVE
- BALL VALVE, NORMALLY OPEN
- BALL VALVE, NORMALLY CLOSED
- GLOBE VALVE, NORMALLY CLOSED
- GLOBE VALVE, NORMALLY OPEN
- GLOBE VALVE, LOCKED THREAD
- DIAPHRAM VALVE - NORMALLY OPEN
- DIAPHRAM VALVE - NORMALLY CLOSED
- PLUG VALVE, NORMALLY OPEN
- PLUG VALVE, NORMALLY CLOSED
- NEEDLE VALVE - NORMALLY OPEN
- NEEDLE VALVE - NORMALLY CLOSED
- PINCH VALVE
- STOPCHECK VALVE - NORMALLY OPEN (NRV)
- STOPCHECK VALVE - NORMALLY CLOSED (NRV)
- 3-WAY VALVE NORMALLY OPEN
- 3-WAY VALVE MID CLOSED
- 3-WAY VALVE SIDE CLOSED
- 4-WAY VALVE, NORMALLY OPEN
- 3-WAY PLUG VALVE
- 4-WAY PLUG VALVE
- ANGLE VALVE, NORMALLY OPEN
- ANGLE VALVE, NORMALLY CLOSED
- ANGLE CHECK VALVE, NORMALLY OPEN
- ANGLE CHECK VALVE, NORMALLY CLOSED
- CONTROL VALVE, NORMALLY OPEN
- CONTROL VALVE, NORMALLY CLOSED

PROCESS PIPING SYMBOLS FITTINGS

- CONCENTRIC REDUCER
- ECCENTRIC REDUCER
- WELDED CAP
- SCREWED CAP
- BREATHER CAP
- FLANGE
- UNION
- LOOP SEAL
- VENT
- REMOVABLE SPOOL
- FLEXIBLE CONNECTOR
- SPECTACLE BLIND
- BASKET STRAINER
- TWIN STRAINER
- Y STRAINER
- STARTUP STRAINER
- SCREEN STRAINER
- TRAP
- FILTER
- EXPANSION JOINT
- EXHAUST
- EJECTOR
- MIXING TEE
- SAMPLE COOLER

INSTRUMENT SYMBOLS

- MEASUREMENT CODE / KKS CODE — MOUNTED IN MAIN CONTROL BOARD
- MEASUREMENT CODE / KKS CODE — MOUNTED IN FIELD DCS CONNECTED
- MEASUREMENT CODE / KKS CODE — LOCALLY MOUNTED IN FIELD
- MEASUREMENT CODE / KKS CODE — INSTRUMENT WITH PIGTAIL SIPHON
- ORIFICE PLATE
- VORTEX FLOW ELEMENT
- M — MAGNETIC FLOW ELEMENT
- FLOW NOZZLE
- VENTURI FLOW ELEMENT
- FLOW STRAIGHTING VANES
- CONDENSATE POT
- PULSATION DAMPENER

EQUIPMENT SYMBOLS

- MODULE
- DISTRIBUTION GRID
- BURNER
- AMMONIA INJECTION GRID
- EXPANSION JOINT
- SILENCER
- CENTRIFUGAL PUMP
- PRESSURE VESSEL (STEAM DRUM)
- VENT STACK
- NOZZLE DOUBLE
- NOZZLE SINGLE
- HEAT EXCHANGER

INSTRUMENT LINES

- PROCESS
- NOT IN VPI SCOPE OF SUPPLY

PIPING LINES

- PRIMARY - STEAM
- SECONDARY - WATER
- VENTS & DRAINS
- PIPING & COMPONENTS NOT IN VPI SCOPE OF SUPPLY
- FLOW ARROW
- LINE NUMBER BREAK
- SYSTEM BREAK
- TERMINAL POINT (INTERFACE POINT)
- SHEET CONNECTOR ONE DIRECTION
- SHEET CONNECTOR BOTH DIRECTIONS

VALVE OPERATOR SYMBOLS

- DIAPHRAM OPERATOR (WITH HANDWHEEL)
- HAND OPERATOR
- PRESSURE RELIEF
- CYLINDER OPERATOR
- S — SOLENOID OPERATOR
- M — MOTOR OPERATOR
- SELF REGULATING OPERATOR
- P — PILOT OPERATOR

TAGGING INFO.:

AAABB / CCDDD / 8 / XYZ

- PIPING DESIGNATION FLAG, POINTING IN FLOW DIRECTION
- SYSTEM CODE
- LINE CODE
- LINE SIZE
- VPI INTERNAL SPEC

VALVE---------- CC DDD
INSTRUMENT ------ AAA BB CC DDD
EQUIPMENT ------- AAA BB CC DDD
TERMINAL POINT -- T-AAA##

AAA - SYSTEM ID

GCO = INJECTION SYSTEM FOR MAIN FLUID
HAC = ECONOMIZER SYSTEM
HAD = DRUM / EVAPORATOR SYSTEM
HAH = SUPERHEATER SYSTEM
HAN = PRESSURE SYSTEM DRAINAGE AND VENTING
HNA = DUCTWORK (EXHAUST GAS SIDE OF HRSG)

HNB = BYPASS DAMPER
HNE = HRSG EXHAUST STACK
LAA = DEARATOR
LAB = FEEDWATER
LAC = FW PUMPS & HEAT EXCHANGER
LAE = ATTEMPERATOR (DESUPERHEATER)
LBA = MAIN STEAM PIPING
LBG = AUXILIARY STEAM PIPING
LBH = BLOWDOWN TANK
LCA = MAIN CONDENSATE PIPING
LCQ = BLOWDOWN SYSTEM

PGA = COOLING WATER SYSTEM

BB - SUB-SYSTEM ID

10 = HP SYSTEM
20 = HP SYSTEM
30 = NOT USED
40 = NOT USED
50 = LP SYSTEM

CC - ITEM TYPE CODE

AA = VALVES.DAMPERS.TRAP.EXPANSION.BELLOWS.ACTUATORS
AC = HEAT EXCHANGER
AT = STRAINER / SEPARATOR
AP = PUMPS
BB = DRUM / CONDENSATE POTS
BR = LINES.EXPANSION JOINT.DUCTWORK
BS = SILENCERS
CF = FLOW DEVICES
CL = LEVEL DEVICES
CG = POSITION MEASUREMENT
CP = PRESSURE DEVICES
CQ = QUALITY VARIABLES
CT = TEMPERATURE DEVICES
CY = VIBRATION DEVICES

DDD - ITEM NUMBERING

FOR 'AA':
001-100 = VALVES, GENERAL
101-199 = MOTOR VALVES
201-299 = VALVES W/PNEUMATIC & MAGNETIC ACTUATORS
301-399 = HYDRAULIC VALVES
401-499 = SPRING OPERATED VALVES (SAFETY VALVES)
501-599 = DRAIN VALVES
601-699 = VENT VALVES
701-799 = IMPULSE LINE VALVES
801-899 = SAMPLING & DOSING VALVES
901-999 = EXPANSION JOINT, BELLOWS & TRAP

FOR 'BR':
001-499 = PIPING (GENERALLY)
501-599 = DRAINS
601-699 = VENTS
701-799 = INTERNAL INSTRUMENT LINES
801-899 = SAMPLING & DOSING PIPING
901-999 = LINES TO & FROM SAFETY VALVES

FOR 'C*':
001-199 = ANALOG SIGNAL
201-299 = BINARY SWITCHES
301-399 = NOT USED
401-499 = ACCEPTANCE TEST
501-599 = LOCAL MEASURING
601-699 = TESTING EQUIPMENT
701-799 = LIMITATION DEVICES
801-899 = SAFETY SYSTEM
901-999 = GROUPED MEASURING CIRCUITS

FUNCTION CODE

COP = CONDENSATE POT
FE = FLOW ELEMENT
FT = FLOW TRANSMITTER
FY = POSITION CONTROLLER (FLOW)
HS = HAND SWITCH
LI = LEVEL INDICATOR

LSL = LEVEL SWITCH LOW
LT = LEVEL TRANSMITTER
LY = POSITION CONTROLLER (LEVEL)
LYT = DENSITY COMP. LEVEL TRANSMITTER
PI = PRESSURE GAUGE
PDT = PRESSURE DIFFERENTIAL TRANSMITTER
PT = PRESSURE TRANSMITTER
PY = POSITION CONTROLLER (PRESSURE)
TE = TEMPERATURE ELEMENT
TI = TEMPERATURE INDICATOR
TT = TEMPERATURE TRANSMITTER
TY = POSITION CONTROLLER (TEMPERATURE)
TW = THERMOWELL
GS = POSITION TRANSMITTER
GSC = POSITION SWITCH, CLOSED
GSO = POSITION SWITCH, OPEN
WSC = TORQUE SWITCH, CLOSED
WSO = TORQUE SWITCH, OPEN
GY = POSITION COMMAND, STOP
GYC = POSITION COMMAND, CLOSED
GYO = POSITION COMMAND, OPEN
YT = VIBRATION TRANSMITTER
JB = JUNCTION BOX

X = PRESS. CLASS IDENTIFIER (FLANGE RATING)

A = 4500#
B = 2500#
C = 1500#
D = 900#
E = 600#
G = 300#
H = 150#
X = NO CLASS REQUIRE (NON PRESSURE PART)

Y = MATERIAL TYPE IDENTIFIER

A = SA-335 P91
B = SA-335 P22
C = SA-335 P11
D = SA-106 GR.B
E = SA-106 GR.C
G = A-312 TYPE 316 SS
H = A-312 TYPE 316H SS
J = A-312 TYPE 304 SS
K = A-312 TYPE 304H SS

Z = CODE CLASS IDENTIFIER

K = ASME SECTION I (SECTION I ADMINISTRATIVE & TECHNICAL JURISDICTION - BOILER PROPER)
H = ASME SECTION I (SECTION I ADMINISTRATIVE JURISDICTION, ASME B31.1 TECHNICAL JURISDICTION - BOILER EXTERNAL)
D = ASME B31.1
M = SECTION 8
T = ASME B31.3
X = NON-CODE

SAFETY VALVE WITH OUTLET PIPING TO SILENCER: VENTS AND DRAINS SUPPLIED WITH EACH VALVE AND SILENCER ARE ROUTED TO DRAIN FUNNEL OR "SAFE" AREA

SAFETY VALVE WITH VENT STACK: VENTS AND DRAINS SUPPLIED WITH EACH VALVE

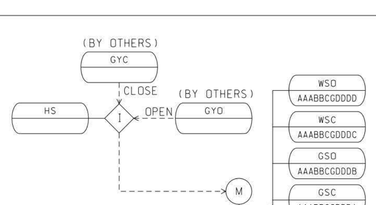

DETAIL A

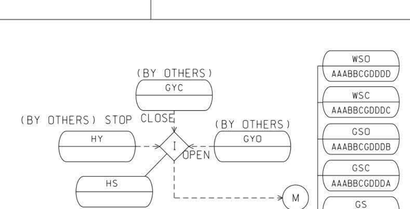

DETAIL B

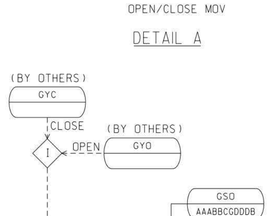

DETAIL C

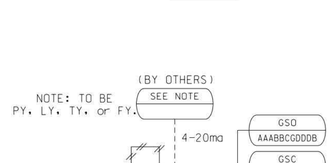

DETAIL D

GENERAL NOTES:

1. P&ID'S REFLECT ONE (1) UNIT, TWO (2) UNITS REQUIRED TOTAL (UNLESS NOTED OTHERWISE).
2. ALL TAGS ARE TO BE PRECEDED WITH UNIT NUBMER "21" OR "22" TO REPRESENT THE TWO UNITS RESPECTIVELY.
3. ALL VALVES & FITTINGS NORMALLY WELDED (SOCKET OR BUTTWELD) UNLESS OTHERWISE (EG., FLANGED)
4. ALL VALVE SHOWN OPEN IN NORMAL OPERATING CONDITIONS UNLESS NOTED OTHERWISE.
5. ALL MOTOR ACTUATED VALVES ARE FAIL AS IS IN PLACE.

VOGT POWER INTERNATIONAL	
For Construction / Fabrication	
Hugle, Kathy	Apr-11-2012

REFERENCE DRAWINGS:

V17460-ICND-001 (ABPR2-M-S-PD-0135)- P&ID LEGEND & GENERAL NOTES
V17460-ICND-002 (ABPR2-M-S-PD-0136)- FLUE GAS
V17460-ICND-003 (ABPR2-M-S-PD-0137)- HIGH PRESSURE P&ID
V17460-ICND-004 (ABPR2-M-S-PD-0138)- LOW PRESSURE P&ID
V17460-ICND-005 (ABPR2-M-S-PD-0139)- DA, STORAGE TANK & HEAT EXCHANGER P&ID
V17460-ICND-006 (ABPR2-M-S-PD-0140)- BLOWDOWN, SILENCERS, PSV VENTS & DRAINS P&ID
V17460-ICND-010 (ABPR2-M-S-PD-0141)- PROCESS FLOW DIAGRAM FOR HRSG

Rev.	Description	Date	Drawn	Chkd. 1	Chkd. 2	Appr.
05						
04						
03						
02	CUSTOMERS COMMENTS	04-APR-12	GRP	KH		DP
01	REVISE TITLE BLOCK	31-AUG-11	SK	GRP		DP
00	FIRST ISSUE	27-JUN-11	RN	GRP		DP

Revisions

This drawing contains Vogt Power International's confidential and proprietary information and cannot be used, duplicated or disclosed in whole or in part, except with the express written permission of Vogt Power International EXCEPT AS EXPRESSLY STATED IN ANY WRITTEN CONTRACT - ALL WARRANTIES RELATING TO THIS DRAWING, INCLUDING THE WARRANTIES OF MERCHANTABILITY AND FITNESS, ARE DISCLAIMED.
© Vogt Power International, Inc. all rights reserved as an unpublished work.

OWNER: Amata B. Grimm Power (Rayong) 2 Limited

PROJECT: ABPR2 Combined Cycle Cogeneration Plant Project

CONTRACTOR: Sumitomo Corporation

TITLE: HRSG P&ID LEGEND & GENERAL NOTES

PROJECT CONTROL NO. ABPR2-M-S-PD-0135 REV. 2

Vogt Power International — 4000 DuPont Circle, Louisville, Ky. 40207 USA, www.VogtPower.com

3rd ANGLE PROJECTION — Scale: NONE

Internal Drawing Status	Size	Drawing No.	Rev.
FOR RECORD	A1	V17460-ICND-001	02

Equivalent Pipe Table	
Nominal Pipe Size English NPS	Metric Nominal Dia. SI DN
1/4	8
3/8	10
1/2	15
3/4	20
1	25
1 1/2	40
2	50
2 1/2	65
3	80
3 1/2	90
4	100
5	125
6	150
8	200
10	250
12	300
14	350
16	400
18	450
20	500

GENERAL NOTES:

1. P&ID'S REFLECT ONE (1) UNIT. TWO (2) UNITS REQUIRED TOTAL (UNLESS NOTED OTHERWISE).
2. ALL TAGS ARE TO BE PRECEDED WITH UNIT NUBMER "21" OR "22" TO REPRESENT THE TWO UNITS RESPECTIVELY.
3. FOR ADDITIONAL GENERAL NOTES SEE V17460-ICND-001 (ABPR2-M-S-PD-0135).

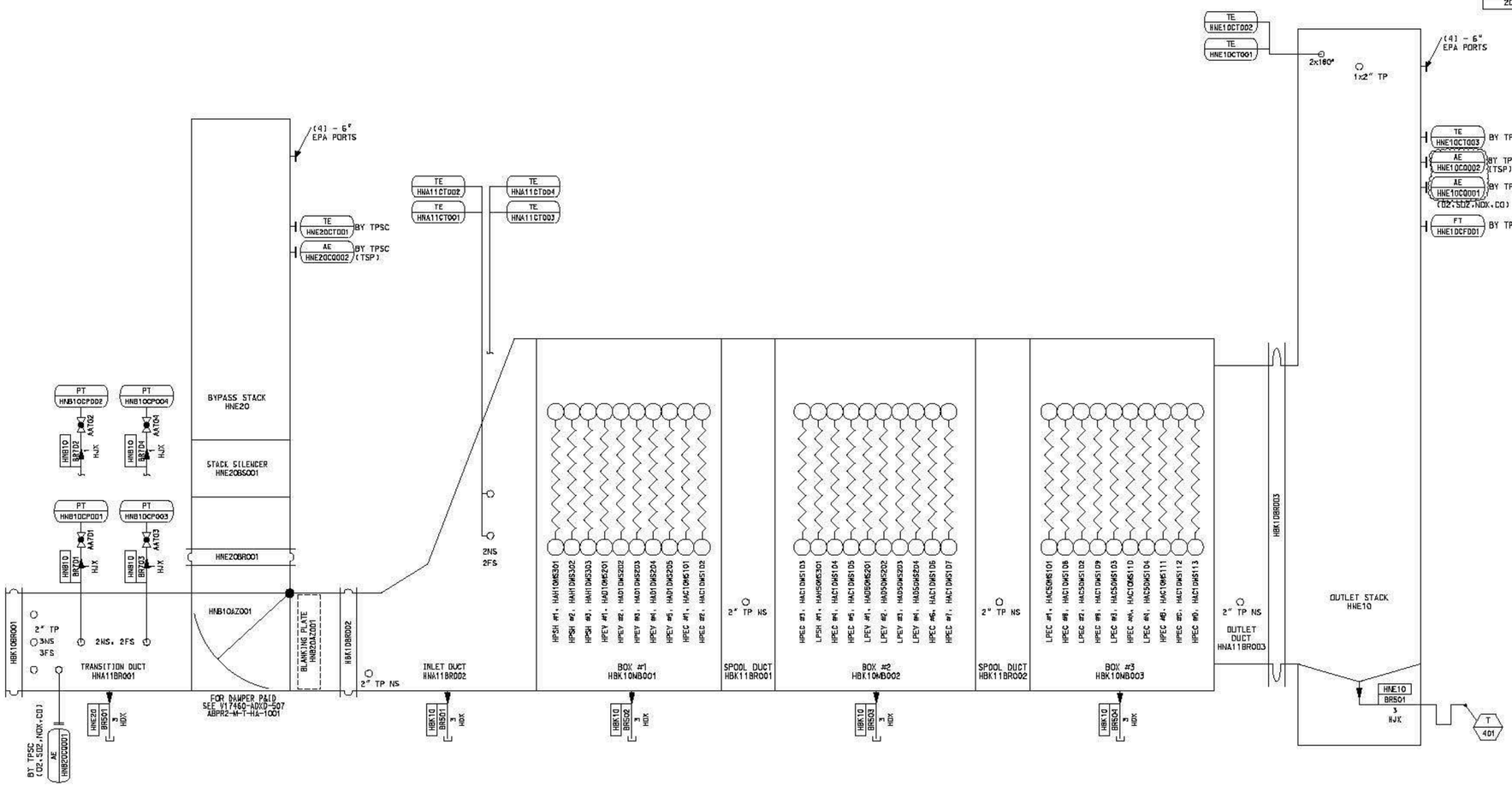

REFERENCE DRAWINGS:

V17460-ICND-001 (ABPR2-M-S-PD-0135)- P&ID LEGEND & GENERAL NOTES
V17460-ICND-002 (ABPR2-M-S-PD-0136)- FLUE GAS
V17460-ICND-003 (ABPR2-M-S-PD-0137)- HIGH PRESSURE P&ID
V17460-ICND-004 (ABPR2-M-S-PD-0138)- LOW PRESSURE P&ID
V17460-ICND-005 (ABPR2-M-S-PD-0139)- DA, STORAGE TANK & HEAT EXCHANGER P&ID
V17460-ICND-006 (ABPR2-M-S-PD-0140)- BLOWDOWN, SILENCERS, PSV VENTS & DRAINS P&ID
V17460-ICND-010 (ABPR2-M-S-PD-0141)- PROCESS FLOW DIAGRAM FOR HRSG

Rev.	Description	Date	Drawn	Chkd. 1	Chkd. 2	Appr.
05						
04						
03						
02	CUSTOMERS COMMENTS	04-APR-12	GRP	KH		DP
01	REVISE TITLE BLOCK	31-AUG-11	SK	GRP		DP
00	FIRST ISSUE	27-JUN-11	RH	GRP		DP

Revisions

This drawing contains Vogt Power International's confidential and proprietary information, and cannot be used, duplicated or disclosed in whole or in part, except with the express written permission of Vogt Power International. EXCEPT AS EXPRESSLY STATED IN ANY WRITTEN CONTRACT, ALL WARRANTIES RELATED TO THIS DRAWING, INCLUDING THE WARRANTIES OF MERCHANTABILITY AND FITNESS, ARE DISCLAIMED. ©Vogt Power International Inc. all rights reserved as an unpublished work.

OWNER

Amata B. Grimm Power (Rayong) 2 Limited

PROJECT

ABPR2 Combined Cycle Cogeneration Plant Project

CONTRACTOR

Sumitomo Corporation

TITLE

HRSG FLUE GAS P&ID

PROJECT CONTROL NO. ABPR2-M-S-PD-0136 REV. 3

Vogt Power International
1000 DuPont Circle
Louisville, Ky. 40207 USA
www.VogtPower.com

Scale: NONE

Internal Drawing Status	Size	Drawing No.	Rev.
FOR RECORD	A1	V17460-ICND-002	03

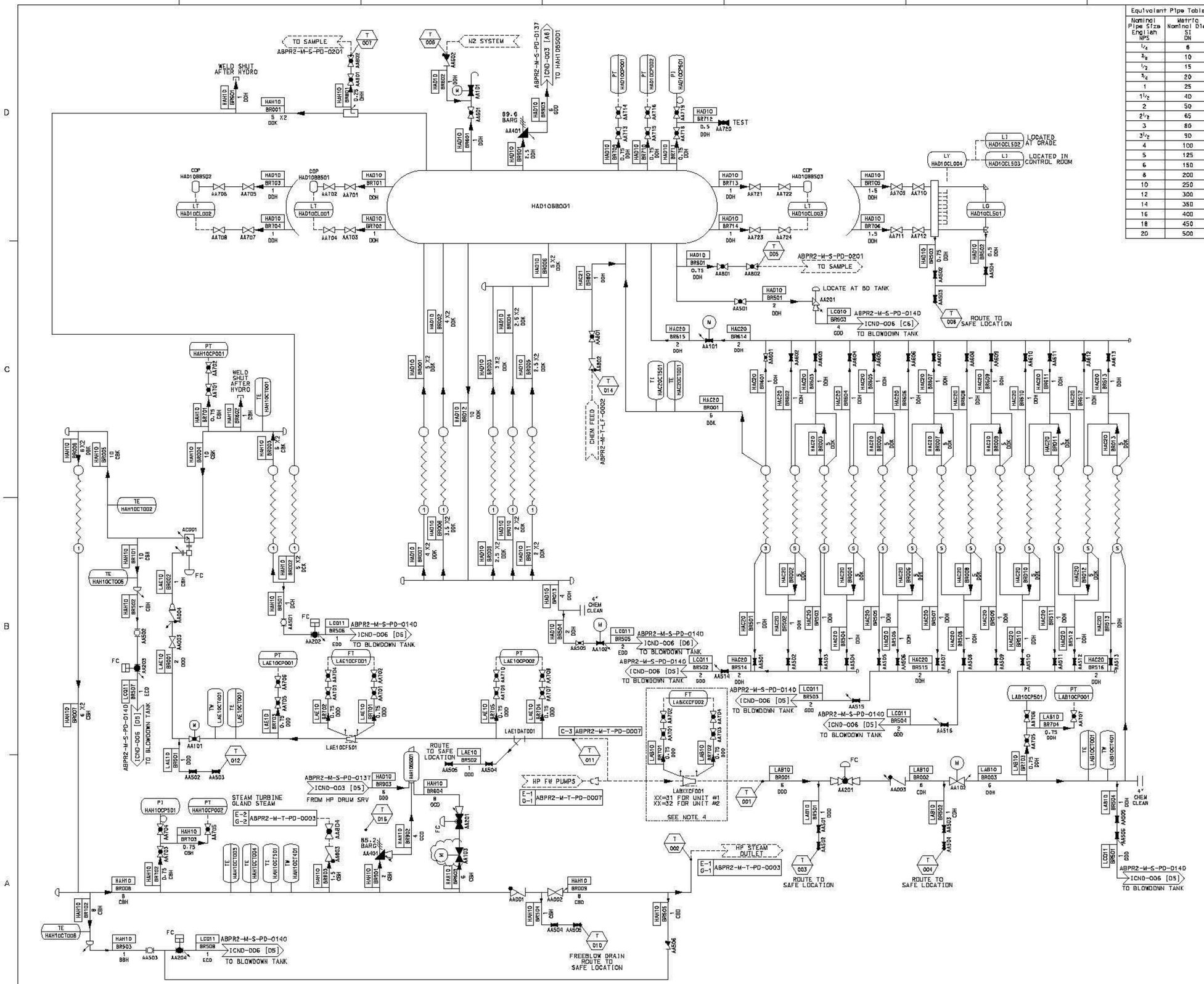

Equivalent Pipe Table	
Nominal Pipe Size English NPS	Metric Nominal Dia. SI DN
1/4	8
3/8	10
1/2	15
3/4	20
1	25
1 1/2	40
2	50
2 1/2	65
3	80
3 1/2	90
4	100
5	125
6	150
8	200
10	250
12	300
14	350
16	400
18	450
20	500

GENERAL NOTES:

1. P&ID'S REFLECT ONE (1) UNIT. TWO (2) UNITS REQUIRED TOTAL (UNLESS NOTED OTHERWISE).
2. ALL TAGS ARE TO BE PRECEDED WITH UNIT NUBMER "21" OR "22" TO REPRESENT THE TWO UNITS RESPECTIVELY.
3. FOR ADDITIONAL GENERAL NOTES SEE V17460-ICND-001 (ABPR2-M-S-PD-0135).
4. FOR INSTALLATION DETAILS OF BOTH UNITS, SEE ABPR2-M-T-PD-0007

OPEN/CLOSE MOTOR OPERATED VALVE (DETAIL A)
LAE10AA101 (FIP)
HAD10AA101 (FIP)
HAD10AA102 (FIP)
HAD10AA103 (FIP)
HAC20AA101 (FIP)
LAB10AA102 (FIP)

OPEN/CLOSE CYLINDER OPERATED VALVE (DETAIL C)
HAH10AA202 (FC)
HAH10AA203 (FC)
HAH10AA204 (FC)

4-20ma PNEUMATIC VALVE (DETAIL D)
HAH10AA201 (FC)
LAE10AA201 (FC)
LAB10AA201 (FC)
HAD10AA201 (FC)

REFERENCE DRAWINGS:

V17460-ICND-001 (ABPR2-M-S-PD-0135)- P&ID LEGEND & GENERAL NOTES
V17460-ICND-002 (ABPR2-M-S-PD-0136)- FLUE GAS
V17460-ICND-003 (ABPR2-M-S-PD-0137)- HIGH PRESSURE P&ID
V17460-ICND-004 (ABPR2-M-S-PD-0138)- LOW PRESSURE P&ID
V17460-ICND-005 (ABPR2-M-S-PD-0139)- DA, STORAGE TANK & HEAT EXCHANGER P&ID
V17460-ICND-006 (ABPR2-M-S-PD-0140)- BLOWDOWN, SILENCERS, PSV VENTS & DRAINS P&ID
V17460-ICND-010 (ABPR2-M-S-PD-0141)- PROCESS FLOW DIAGRAM FOR HRSG

Rev.	Description	Date	Drawn	Chkd. 1	Chkd. 2	Appr.
05						
04						
03						
02	CUSTOMERS COMMENTS	04-APR-12	BRP	KH		DP
01	REVISE TITLE BLOCK	31-AUG-11	SK	GRP		DP
00	FIRST ISSUE	27-JUN-11	RH	GRP		DP

Revisions

This drawing contains Vogt Power International's confidential and proprietary information and cannot be used, duplicated or disclosed in whole or in part, except with the express written permission of Vogt Power International. EXCEPT AS EXPRESSLY STATED IN ANY WRITTEN CONTRACT - ALL WARRANTIES RELATING TO THIS DRAWING, INCLUDING THE WARRANTIES OF MERCHANTABILITY AND FITNESS, ARE DISCLAIMED. ©Vogt Power International Inc. all rights reserved as an unpublished work.

OWNER: Amata B. Grimm Power (Rayong) 2 Limited

PROJECT: ABPR2 Combined Cycle Cogeneration Plant Project

CONTRACTOR: Sumitomo Corporation

TITLE: HRSG HIGH PRESSURE P&ID

PROJECT CONTROL NO. ABPR2-M-S-PD-0137 REV. 3

Vogt Power International — 1000 DuPont Circle, Louisville, Ky. 40207 USA, www.VogtPower.com

Scale: NONE

Internal Drawing Status	Size	Drawing No.	Rev.
FOR RECORD	A1	V17460-ICND-003	03

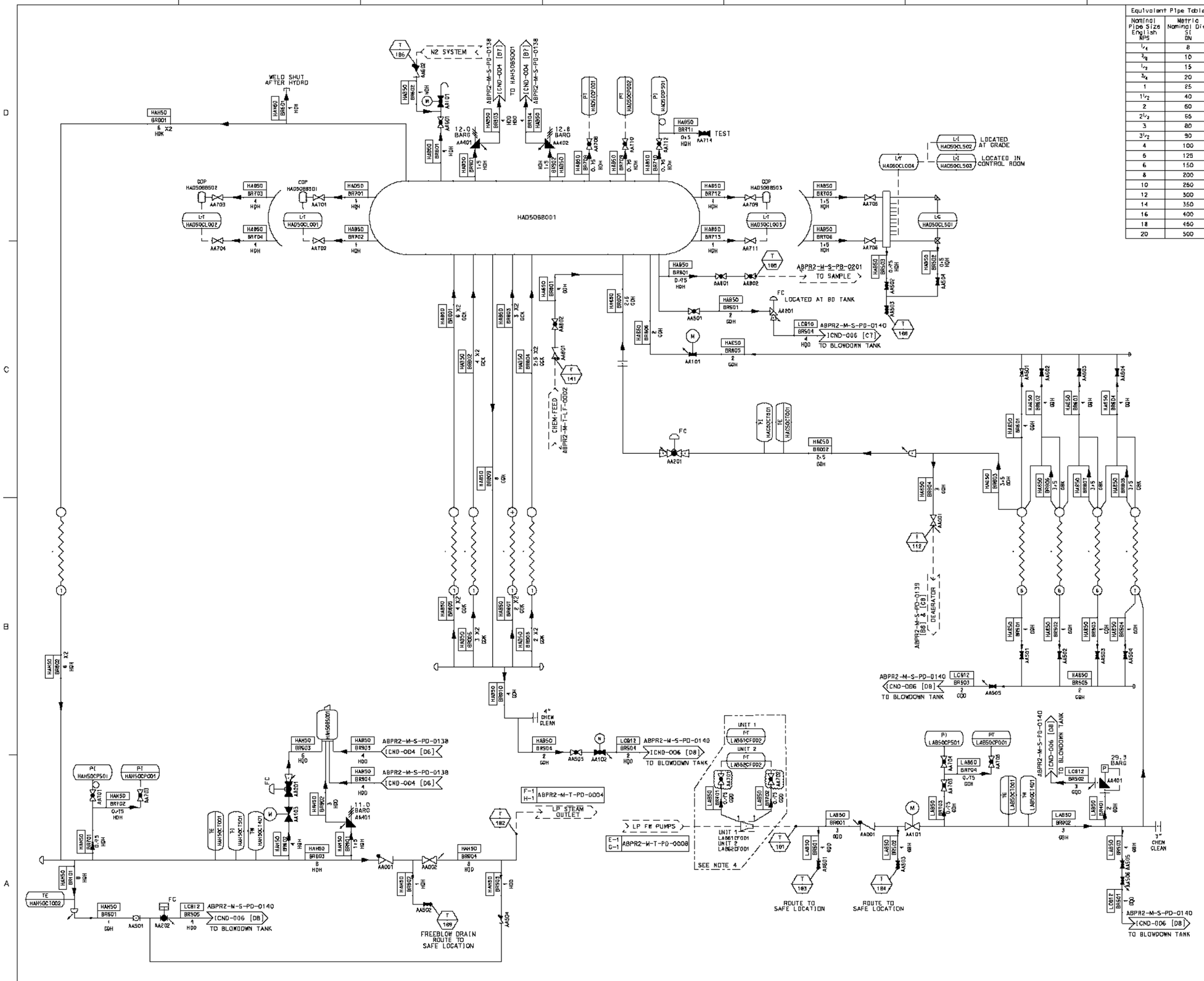

Equivalent Pipe Table	
Nominal Pipe Size English NPS	Metric Nominal Dia. DN
1/4	8
3/8	10
1/2	15
3/4	20
1	25
1 1/2	40
2	50
2 1/2	65
3	80
3 1/2	90
4	100
5	125
6	150
8	200
10	250
12	300
14	350
16	400
18	450
20	500

GENERAL NOTES:

1. P&ID'S REFLECT ONE (1) UNIT. TWO (2) UNITS REQUIRED TOTAL (UNLESS NOTED OTHERWISE).
2. ALL TAGS ARE TO BE PRECEDED WITH UNIT NUBMER "21" OR "22" TO REPRESENT THE TWO UNITS RESPECTIVELY.
3. FOR ADDITIONAL GENERAL NOTES SEE Y17460-ICND-001 (ABPR2-M-S-PD-0135).
4. FOR INSTALLATION DETAILS OF BOTH UNITS, SEE ABPR2-M-T-PD-0008.

OPEN/CLOSE MOTOR OPERATED VALVE (DETAIL A)
HAD50AA101 (FIP)
HAD50AA102 (FIP)
HAC50AA101 (FIP)
LAB50AA101 (FIP)

OPEN/CLOSE CYLINDER OPERATED VALVE (DETAIL C)
HAH50AA202 (FC)

4-20mA PNEUMATIC VALVE (DETAIL D)
HAH50AA201 (FC)
HAC50AA201 (FC)
HAD50AA201 (FC)

REFERENCE DRAWINGS:

Y17460-ICND-001 (ABPR2-M-S-PD-0135)- P&ID LEGEND & GENERAL NOTES
Y17460-ICND-002 (ABPR2-M-S-PD-0136)- FLUE GAS
Y17460-ICND-003 (ABPR2-M-S-PD-0137)- HIGH PRESSURE P&ID
Y17460-ICND-004 (ABPR2-M-S-PD-0138)- LOW PRESSURE P&ID
Y17460-ICND-005 (ABPR2-M-S-PD-0139)- Da. STORAGE TANK & HEAT EXCHANGER P&ID
Y17460-ICND-006 (ABPR2-M-S-PD-0140)- BLOWDOWN, SILENCERS, PSV VENTS & DRAINS P&ID
Y17460-ICND-010 (ABPR2-M-S-PD-0141)- PROCESS FLOW DIACRAM FOR HRSG

Rev.	Description	Date	Drawn	Chkd-1	Chkd-2	Appr.
05						
04	UPDATED TAGS FOR VALVES AA701 AND AA702	15-FEB-13	JCH	KH		MK
03	GENERAL UPDATE	06-DEC-12	KC	KH		MK
02	CUSTOMERS COMMENTS	04-APR-12	GRP	KH		DP
01	REVISE TITLE BLOCK	31-AUG-11	SK	GRP		DP
00	FIRST ISSUE	27-JUN-11	RN	GRP		DP

Revisions

This drawing contains Vogt Power International's confidential and proprietary information and cannot be reed, duplicated or disclosed in whole or in part, except with the express written permission of Vogt Power International EXCEPT AS EXPRESSLY STATED IN ANY WRITTEN CONTRACT, ALL WARRANTIES RELATING TO THIS DRAWING, INCLUDING THE WARRANTIES OF MERCHANTABILITY AND FITNESS, ARE DISCLAIMED.
© Vogt Power International, Inc. All rights reserved on an unpublished work.

OWNER: Amata B. Grimm Power (Rayong) 2 Limited

PROJECT: ABPR2 Combined Cycle Cogeneration Plant Project

CONTRACTOR: Sumitomo Corporation

TITLE: HRSG LOW PRESSURE P&ID

PROJECT CONTROL NO. ABPR2-M-S-PD-0138 REV. 4

Vogt Power International
4509 Dupont Circle
Louisville, Ky. 40207 USA
www.VogtPower.com

3rd ANGLE PROJECTION

Scales NONE

Internal Drawing Status	Size	Drawing No.	Rev.
FOR RECORD	A1	Y17460-ICND-004	04

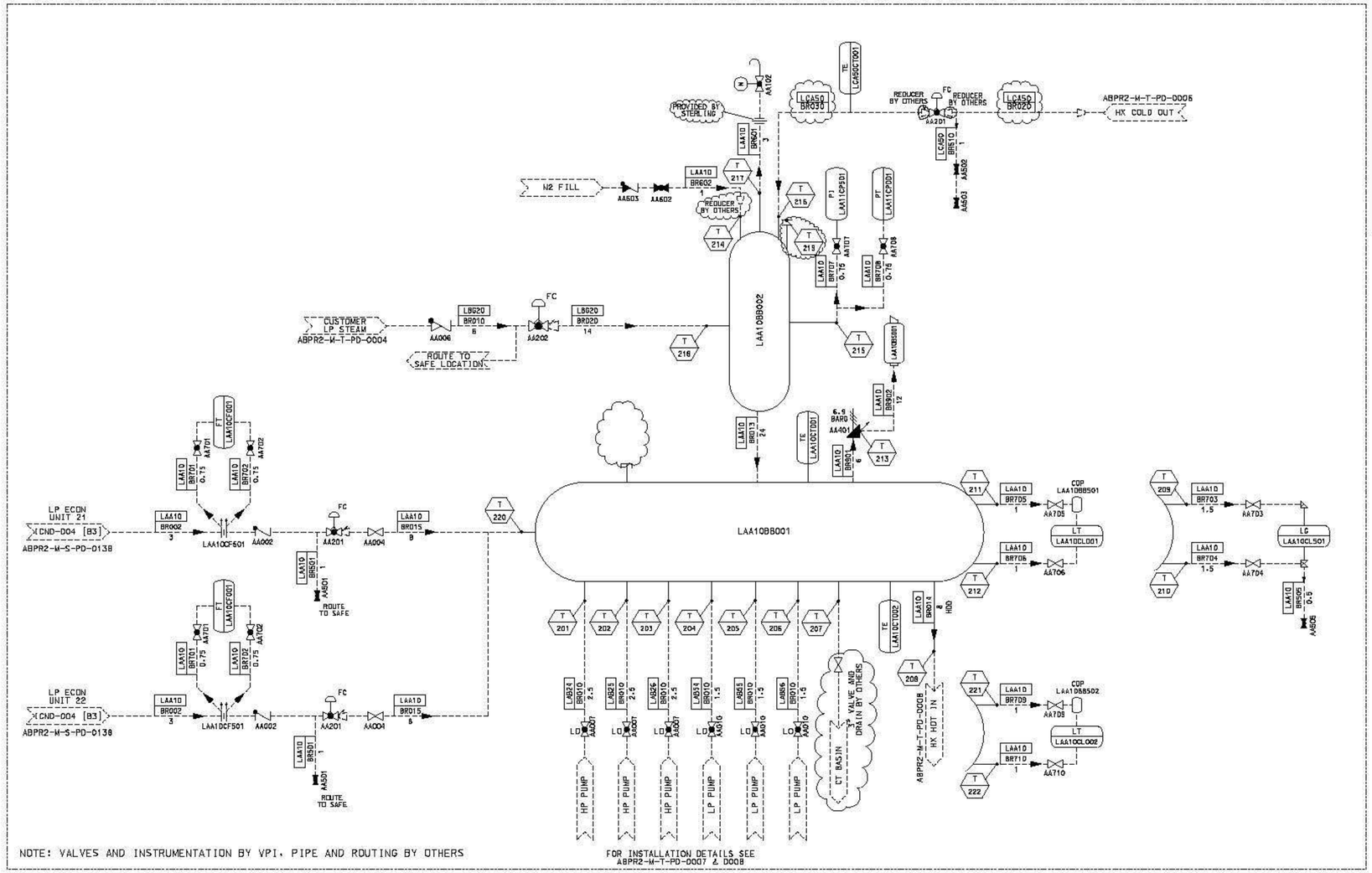

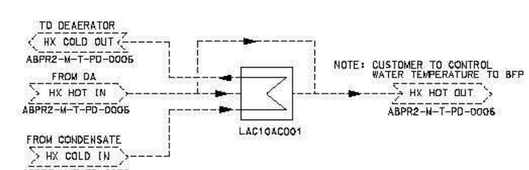

Equivalent Pipe Table	
Nominal Pipe Size English NPS	Metric Nominal Dia. SI DN
1/4	8
3/8	10
1/2	15
3/4	20
1	25
1 1/2	40
2	50
2 1/2	65
3	80
3 1/2	90
4	100
5	125
6	150
8	200
10	250
12	300
14	350
16	400
18	450
20	500

GENERAL NOTES:

1. P&ID'S REFLECT ONE (1) UNIT, ONE (1) UNIT REQUIRED TOTAL (UNLESS NOTED OTHERWISE).
2. ALL TAGS ARE TO BE PRECEDED WITH UNIT NUBMER "20" TO REPRESENT THE CONDENSATE SYSTEM FROM THE HEAT EXCHANGER, "02" FOR THE DEAERATOR AND HEAT EXCHANGER, TWO UNITS RESPECTIVELY.
3. FOR ADDITIONAL GENERAL NOTES SEE V17460-ICND-001.

OPEN/CLOSE MOTOR OPERATED VALVE (DETAIL A)
LAA10AA102 (FIP)

4-20mA PNEUMATIC VALVE (DETAIL D)
LAA11AA201 (FC)
LAA10AA201 (FC)
LAA10AA202 (FC)

REFERENCE DRAWINGS:

V17460-ICND-001 (ABPR2-M-S-PD-0135)- P&ID LEGEND & GENERAL NOTES
V17460-ICND-002 (ABPR2-M-S-PD-0136)- FLUE GAS
V17460-ICND-003 (ABPR2-M-S-PD-0137)- HIGH PRESSURE P&ID
V17460-ICND-004 (ABPR2-M-S-PD-0138)- LOW PRESSURE P&ID
V17460-ICND-005 (ABPR2-M-S-PD-0139)- DA, STORAGE TANK & HEAT EXCHANGER P&ID
V17460-ICND-006 (ABPR2-M-S-PD-0140)- BLOWDOWN, SILENCERS, PSV VENTS & DRAINS P&ID
V17460-ICND-010 (ABPR2-M-S-PD-0141)- PROCESS FLOW DIAGRAM FOR HRSG

Rev.	Description	Date	Drawn	Chkd. 1	Chkd. 2	Appr.
05						
04						
03						
02	CUSTOMERS COMMENTS	04-APR-12	GRP	KH		DP
01	REVISE TITLE BLOCK	31-AUG-11	SK	GRP		DP
00	FIRST ISSUE	27-JUN-11	RM	GRP		DP

Revisions

This drawing contains Vogt Power International's confidential and proprietary information and cannot be used, duplicated or disclosed in whole or in part, except with the express written permission of Vogt Power International. EXCEPT AS EXPRESSLY STATED IN ANY WRITTEN CONTRACT - ALL WARRANTIES RELATING TO THIS DRAWING, INCLUDING THE WARRANTIES OF MERCHANTABILITY AND FITNESS, ARE DISCLAIMED. ©Vogt Power International Inc. all rights reserved as an unpublished work.

OWNER: Amata B. Grimm Power (Rayong) 2 Limited

PROJECT: ABPR2 Combined Cycle Cogeneration Plant Project

CONTRACTOR: Sumitomo Corporation

TITLE: HRSG DA, STORAGE TANK & HEAT EXCHANGER P&ID

PROJECT CONTROL NO. ABPR2- M-S-PD-0139 REV. 3

Vogt Power International, 4600 DuPont Circle, Louisville, Ky. 40207 USA, www.vogtpower.com

3rd ANGLE PROJECTION

Scale: NONE

Internal Drawing Status: FOR RECORD | Size: A1 | Drawing No: V17460-ICND-005 | Rev. 03

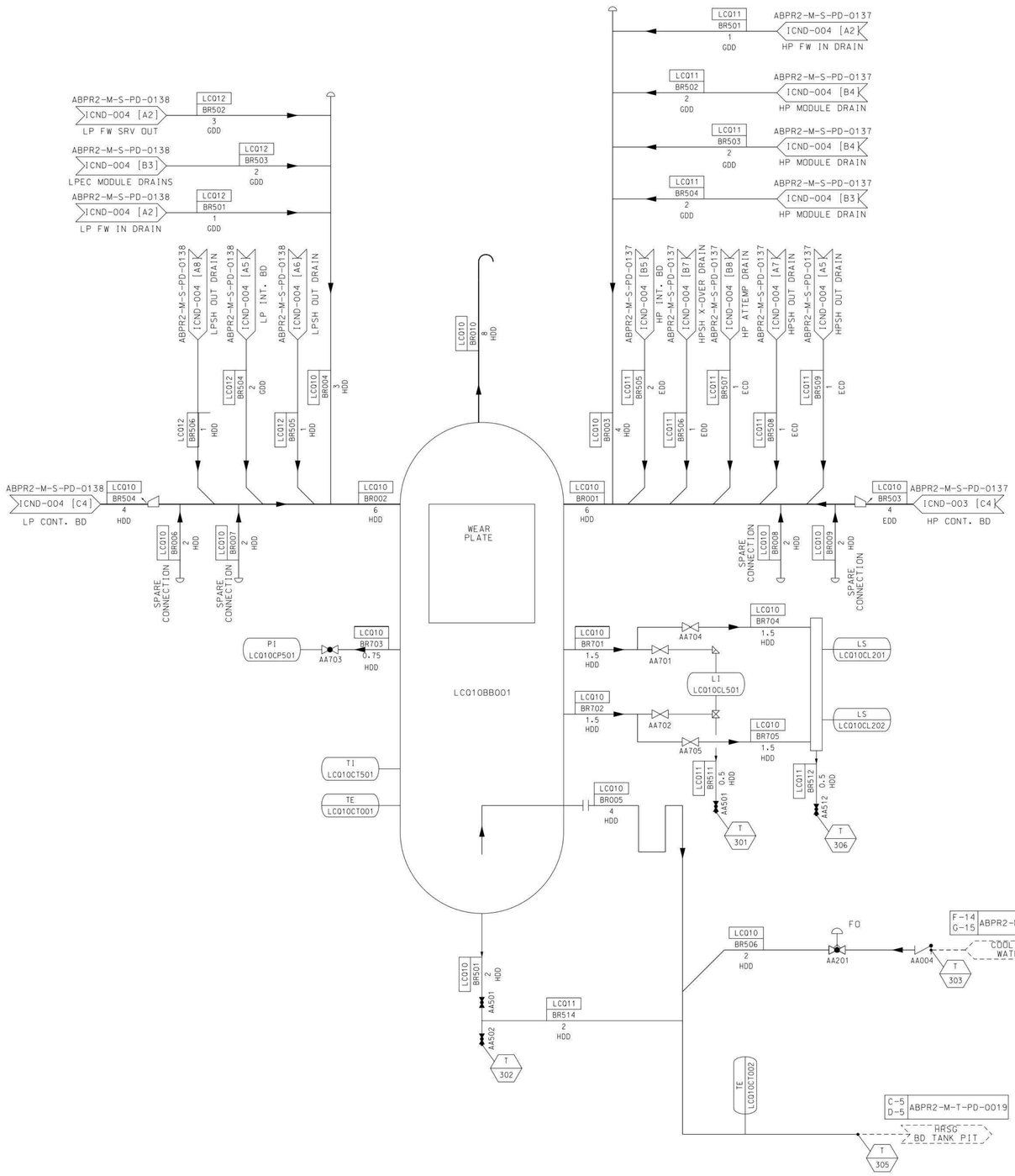

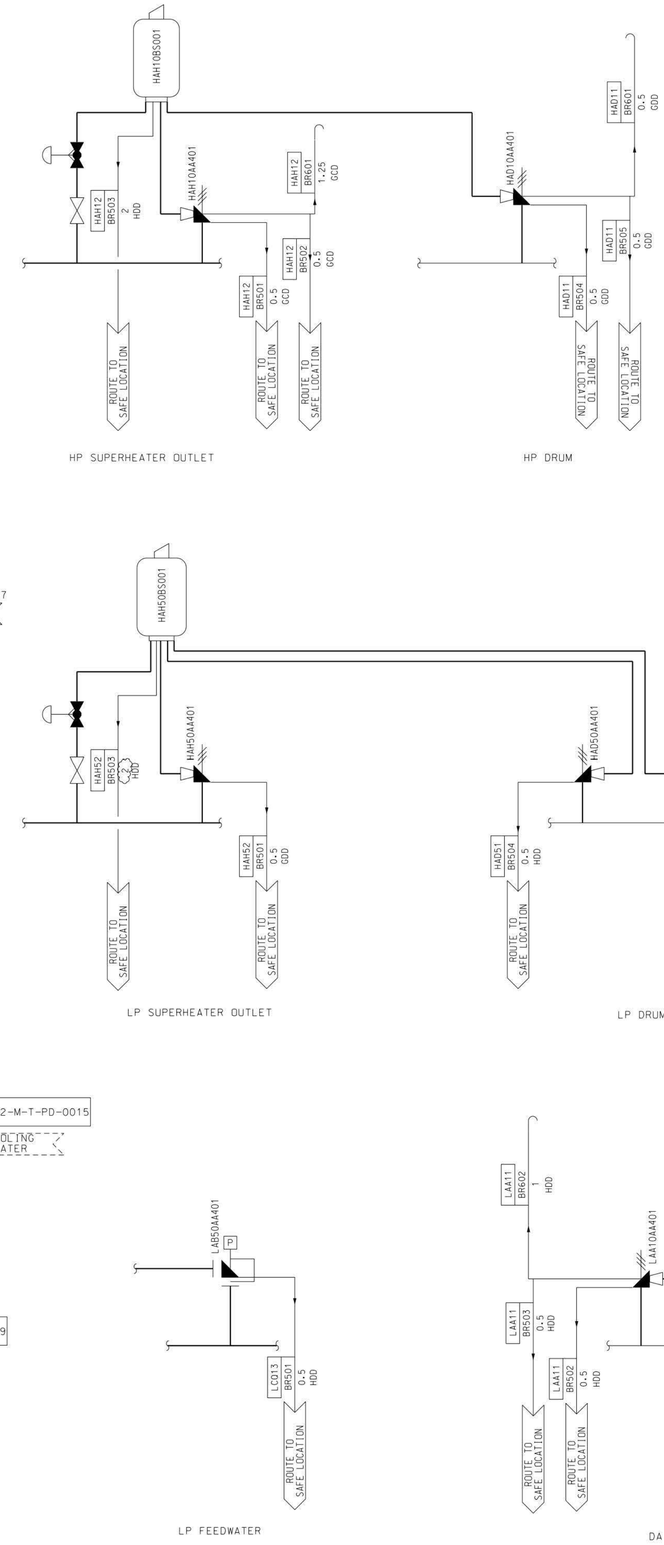

Equivalent Pipe Table	
Nominal Pipe Size English NPS	Metric Nominal Dia. SI DN
1/4	8
3/8	10
1/2	15
3/4	20
1	25
1 1/2	40
2	50
2 1/2	65
3	80
3 1/2	90
4	100
5	125
6	150
8	200
10	250
12	300
14	350
16	400
18	450
20	500

GENERAL NOTES:

1. P&ID'S REFLECT ONE (1) UNIT, TWO (2) UNITS REQUIRED TOTAL (UNLESS NOTED OTHERWISE).
2. ALL TAGS ARE TO BE PRECEDED WITH UNIT NUBMER "21" OR "22" TO REPRESENT THE TWO UNITS RESPECTIVELY.
3. FOR ADDITIONAL GENERAL NOTES SEE V17460-ICND-001 (ABPR2-M-S-PD-0135).

4-20mA PNEUMATIC VALVE (DETAIL D)
LCQ10AA201 (FC)

REFERENCE DRAWINGS:

V17460-ICND-001 (ABPR2-M-S-PD-0135)- P&ID LEGEND & GENERAL NOTES
V17460-ICND-002 (ABPR2-M-S-PD-0136)- FLUE GAS
V17460-ICND-003 (ABPR2-M-S-PD-0137)- HIGH PRESSURE P&ID
V17460-ICND-004 (ABPR2-M-S-PD-0138)- LOW PRESSURE P&ID
V17460-ICND-005 (ABPR2-M-S-PD-0139)- DA, STORAGE TANK & HEAT EXCHANGER P&ID
V17460-ICND-006 (ABPR2-M-S-PD-0140)- BLOWDOWN, SILENCERS, PSV VENTS & DRAINS P&ID
V17460-ICND-010 (ABPR2-M-S-PD-0141)- PROCESS FLOW DIAGRAM FOR HRSG

Rev.	Description	Date	Drawn	Chkd. 1	Chkd. 2	Appr.
05						
04						
03						
02	CUSTOMERS COMMENTS	04-APR-12	GRP	KH		DP
01	REVISE TITLE BLOCK	31-AUG-11	SK	GRP		DP
00	FIRST ISSUE	27-JUN-11	RN	GRP		DP

Revisions

This drawing contains Vogt Power International's confidential and proprietary information and cannot be used, duplicated or disclosed in whole or in part, except with the express written permission of Vogt Power International. EXCEPT AS EXPRESSLY STATED IN ANY WRITTEN CONTRACT - ALL WARRANTIES RELATING TO THIS DRAWING, INCLUDING THE WARRANTIES OF MERCHANTABILITY AND FITNESS, ARE DISCLAIMED.
© Vogt Power International, Inc. all rights reserved as an unpublished work.

OWNER: Amata B. Grimm Power (Rayong) 2 Limited

PROJECT: ABPR2 Combined Cycle Cogeneration Plant Project

CONTRACTOR: Sumitomo Corporation

TITLE: HRSG BLOWDOWN, SILENCERS, PSV VENTS & DRAINS

PROJECT CONTROL NO. ABPR2-M-S-PD-0140 REV. 2

VOGT POWER INTERNATIONAL
4000 DuPont Circle
Louisville, Ky. 40207 USA
www.VogtPower.com

3rd ANGLE PROJECTION

Scale: NONE

Internal Drawing Status	Size	Drawing No.	Rev.
FOR RECORD	A1	V17460-ICND-006	02

VOGT POWER INTERNATIONAL
For Construction / Fabrication
Hugle, Kathy | Apr-11-2012

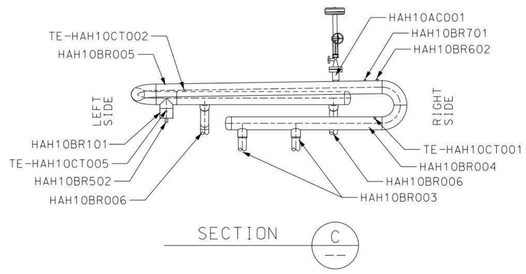

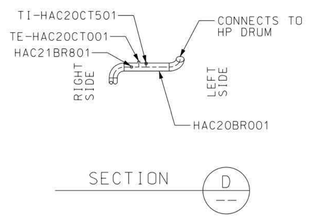

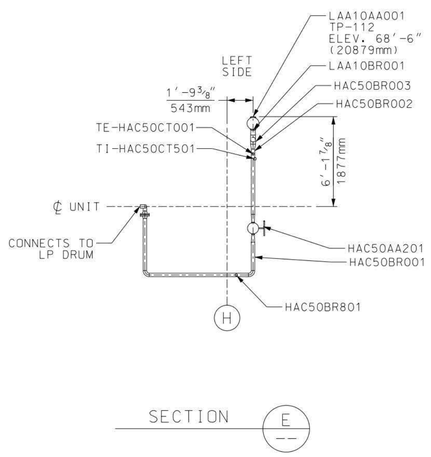

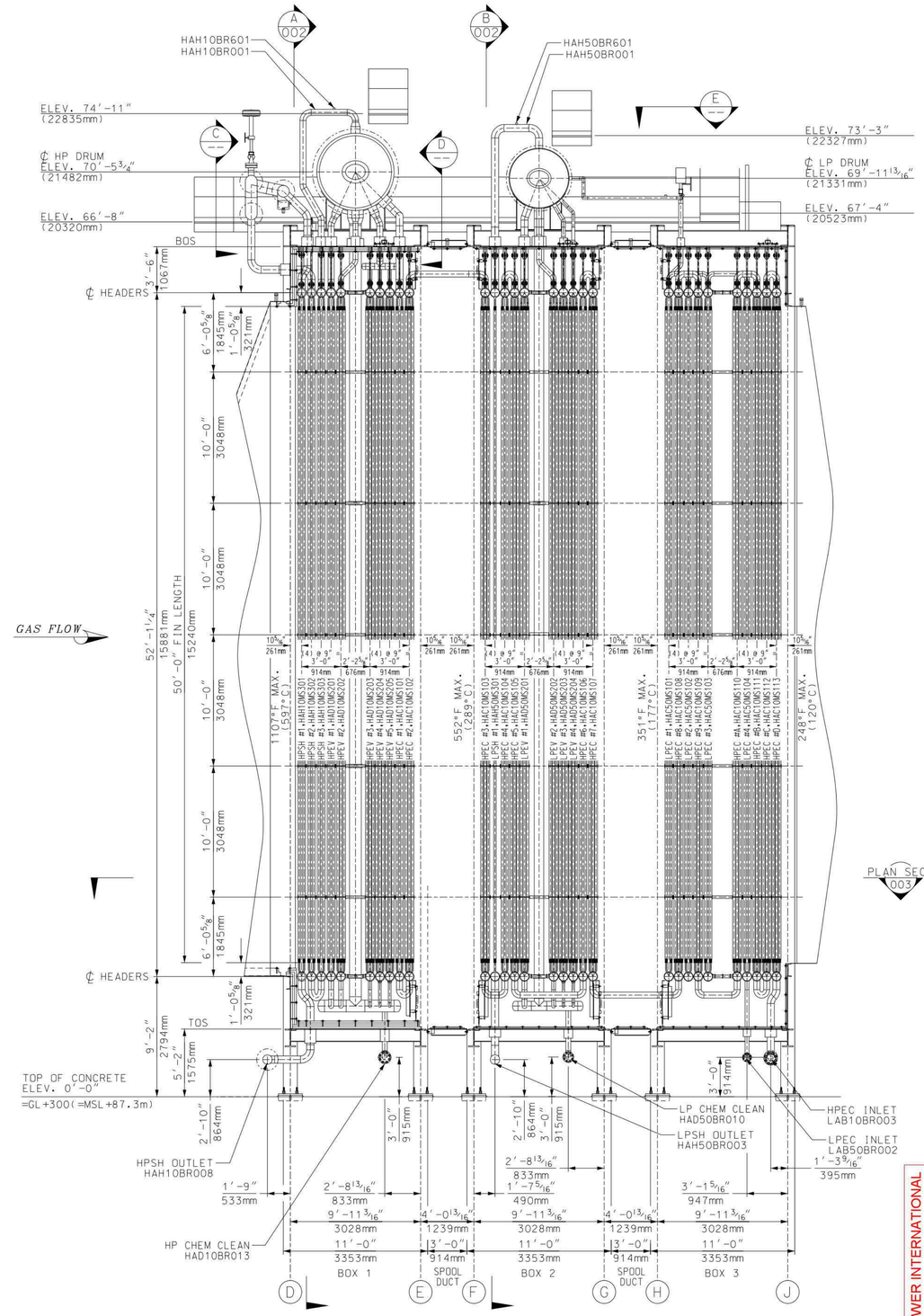

NOTES:
1) ALL PLATFORM ELEVATIONS ARE TO THE TOP OF GRATING.
2) (1) ONE UNIT SHOWN (2) UNITS TOTAL.

REFERENCE DRAWINGS:

V17460-GAND-001 THRU 003: GENERAL ARRANGEMENTS
ABPR2-M-S-HA-0125 THRU 0127

V17460-SEND-001 THRU 003: BOILER SETTINGS
ABPR2-M-S-HA-0685 THRU 0687

V17460-ICND-001 THRU 006: P&ID's
ABPR2-M-S-PD-0135 THRU 0140

V17460-FLND-001: FOUNDATION DIAGRAM
ABPR2-M-S-HA-0120

V17460-SENF-001: GENERAL NOTES AND DATA
ABPR2-K-S-HA-0152

Rev.	Description	Date	Drawn	Chkd. 1	Chkd. 2	Appr.
05						
04						
03						
02	REVISE PER CUST COMMENTS	24-FEB-12	GRP	KH		DP
01	REVISE TITLE BLOCK	31-AUG-11	SK	GRP		DP
00	FIRST ISSUE	27-JUN-11	AS	GRP		DP

Revisions

This drawing contains Vogt Power International's confidential and proprietary information and cannot be used, duplicated or disclosed in whole or in part, except with the express written permission of Vogt Power International. EXCEPT AS EXPRESSLY STATED IN ANY WRITTEN CONTRACT - ALL WARRANTIES RELATING TO THIS DRAWING, INCLUDING THE WARRANTIES OF MERCHANTABILITY AND FITNESS, ARE DISCLAIMED.
© Vogt Power International, Inc. all rights reserved as an unpublished work.

OWNER
Amata B. Grimm Power (Rayong) 2 Limited

PROJECT
ABPR2 Combined Cycle Cogeneration Plant Project

CONTRACTOR
Sumitomo Corporation

TITLE
HRSG BOILER SETTING
RIGHT SIDE SECTIONAL ELEVATION

PROJECT CONTROL NO. ABPR2-M-S-HA-0685 REV. 2

Vogt Power International
4000 DuPont Circle
Louisville, Ky. 40207 USA
www.VogtPower.com

3rd ANGLE PROJECTION
Scale: 3/16" = 1'-0"

Internal Drawing Status: FOR RECORD
Size: A1
Drawing No.: V17460-SEND-001
Rev.: 02

VOGT POWER INTERNATIONAL
For Construction / Fabrication
Hugle, Kathy
Apr-11-2012

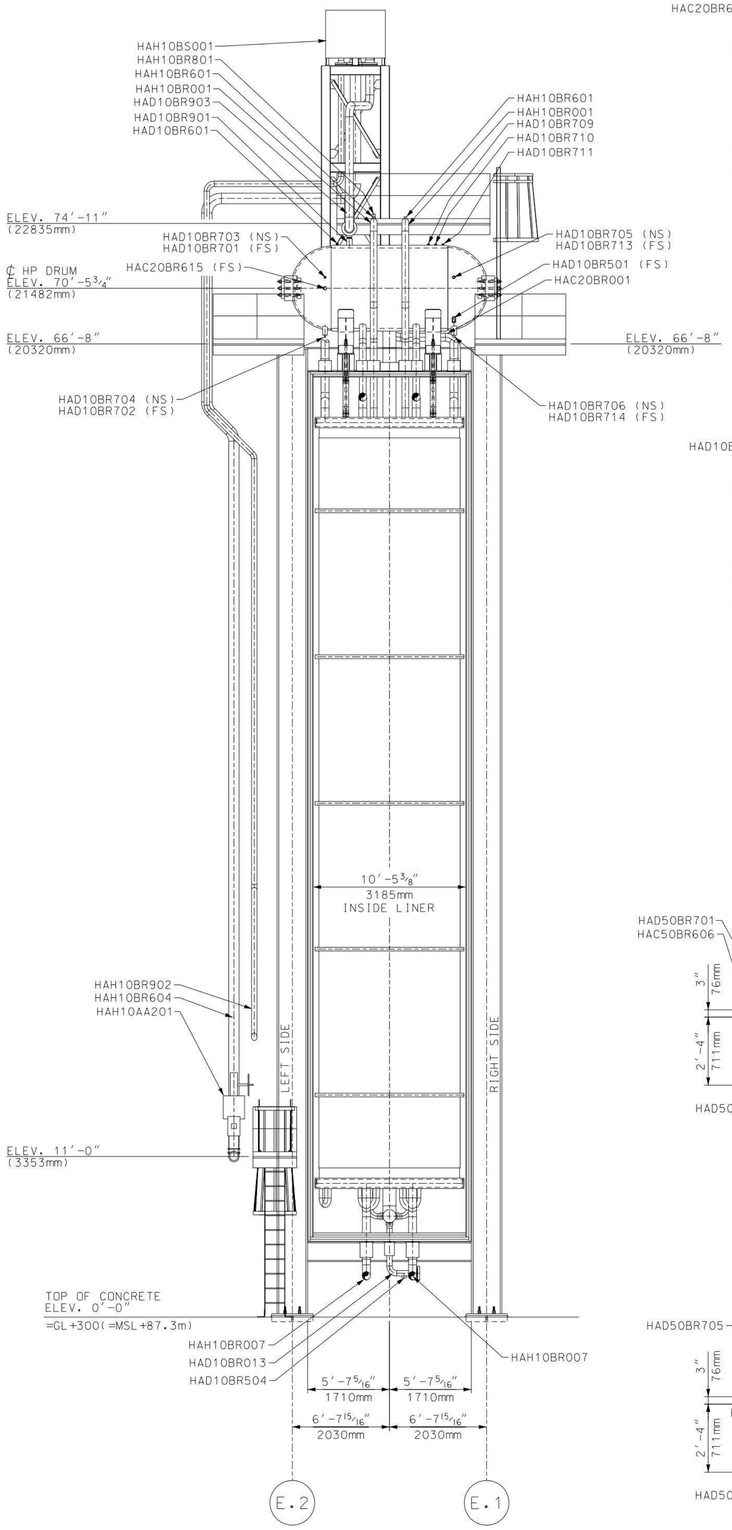

SECTION A 001

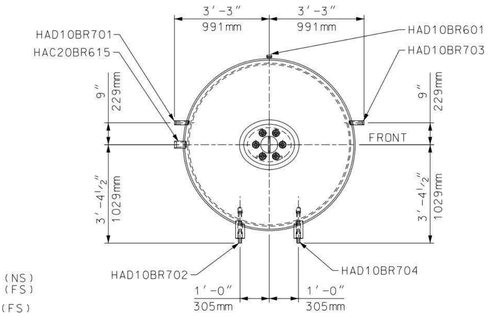

66″ ID HP DRUM
LEFT HEAD
SCALE: 3/8″=1′-0″

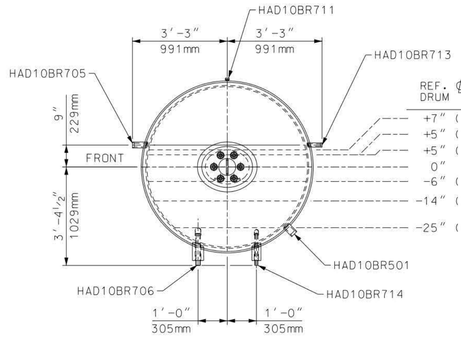

REF. ℄ DRUM	REF. N.W.L.	
+7″ (178mm)	+7″ (178mm)	HIGH LEVEL CUTOFF
+5″ (127mm)	+5″ (127mm)	HIGH LEVEL ALARM
+5″ (127mm)	+5″ (127mm)	DRUM SWELL LEVEL
0″	0″	NORMAL WATER LEVEL
-6″ (152mm)	-6″ (152mm)	LOW LEVEL ALARM
-14″ (356mm)	-14″ (356mm)	START UP LEVEL
-25″ (635mm)	-25″ (635mm)	LOW LEVEL CUTOFF

66″ ID HP DRUM
RIGHT HEAD
SCALE: 3/8″=1′-0″

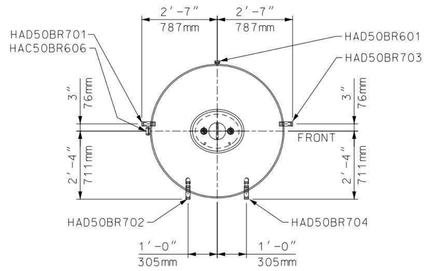

54″ ID LP DRUM
LEFT HEAD
SCALE: 3/8″=1′-0″

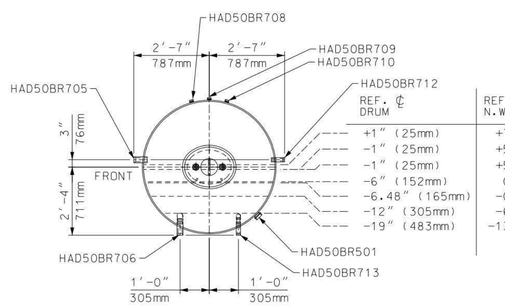

REF. ℄ DRUM	REF. N.W.L.	
+1″ (25mm)	+7″ (178mm)	HIGH LEVEL CUTOFF
-1″ (25mm)	+5″ (127mm)	HIGH LEVEL ALARM
-1″ (25mm)	+5″ (127mm)	DRUM SWELL LEVEL
-6″ (152mm)	0″	NORMAL WATER LEVEL
-6.48″ (165mm)	-0.48″ (12mm)	START UP LEVEL
-12″ (305mm)	-6″ (152mm)	LOW LEVEL ALARM
-19″ (483mm)	-13″ (330mm)	LOW LEVEL CUTOFF

54″ ID LP DRUM
RIGHT HEAD
SCALE: 3/8″=1′-0″

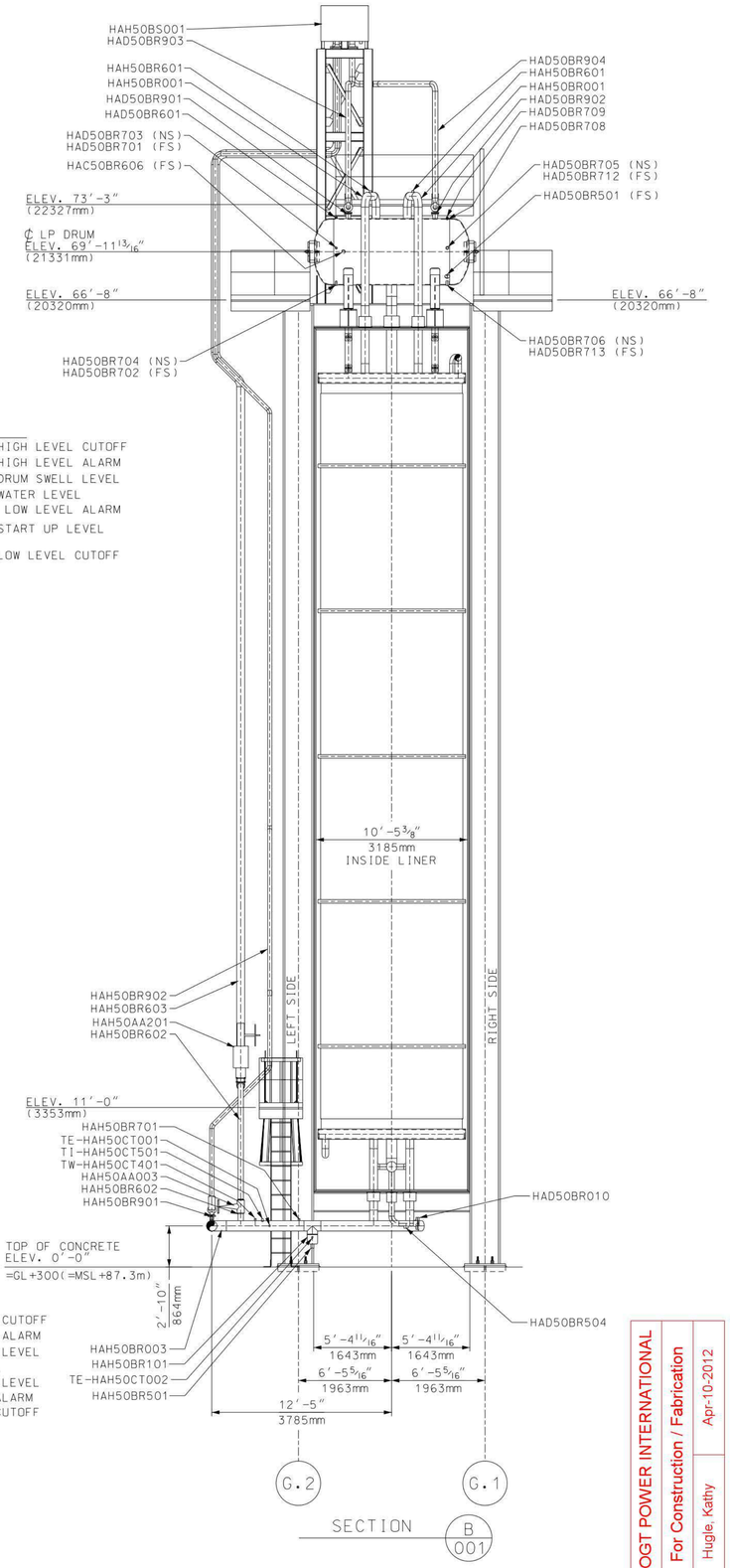

SECTION B 001

NOTES:
1) ALL PLATFORM ELEVATIONS ARE TO THE TOP OF GRATING.
2) (1) ONE UNIT SHOWN (2) UNITS TOTAL.

REFERENCE DRAWINGS:

V17460-GAND-001 THRU 003: GENERAL ARRANGEMENTS
ABPR2-M-S-HA-0125 THRU 0127

V17460-SEND-001 THRU 003: BOILER SETTINGS
ABPR2-M-S-HA-0685 THRU 0687

V17460-ICND-001 THRU 006: P&ID's
ABPR2-M-S-PD-0135 THRU 0140

V17460-FLND-001: FOUNDATION DIAGRAM
ABPR2-M-S-HA-0120

V17460-SENF-001: GENERAL NOTES AND DATA
ABPR2-K-S-HA-0152

Rev.	Description	Date	Drawn	Chkd. 1	Chkd. 2	Appr.
05						
04						
03						
02	REVISE PER CUST COMMENTS	24-FEB-12	GRP	KH		DP
01	REVISE TITLE BLOCK	31-AUG-11	SK	GRP		DP
00	FIRST ISSUE	27-JUN-11	AS	GRP		DP

Revisions

This drawing contains Vogt Power International's confidential and proprietary information and cannot be used, duplicated or disclosed in whole or in part, except with the express written permission of Vogt Power International EXCEPT AS EXPRESSLY STATED IN ANY WRITTEN CONTRACT - ALL WARRANTIES RELATING TO THIS DRAWING, INCLUDING THE WARRANTIES OF MERCHANTABILITY AND FITNESS, ARE DISCLAIMED.
© Vogt Power International, Inc. all rights reserved as an unpublished work.

OWNER
Amata B. Grimm Power (Rayong) 2 Limited

PROJECT
ABPR2 Combined Cycle Cogeneration Plant Project

CONTRACTOR
Sumitomo Corporation

TITLE
HRSG BOILER SETTING
SECTIONS "A" & "B"

PROJECT CONTROL NO. ABPR2-M-S-HA-0686 REV. 2

VOGT POWER INTERNATIONAL
For Construction / Fabrication
Hugle, Kathy
Apr-10-2012

Vogt Power International
4000 DuPont Circle
Louisville, Ky. 40207 USA
www.VogtPower.com

3rd ANGLE PROJECTION
Scale: 3/8″ = 1′-0″

Internal Drawing Status	Size	Drawing No.	Rev.
FOR RECORD	A1	V17460-SEND-002	02

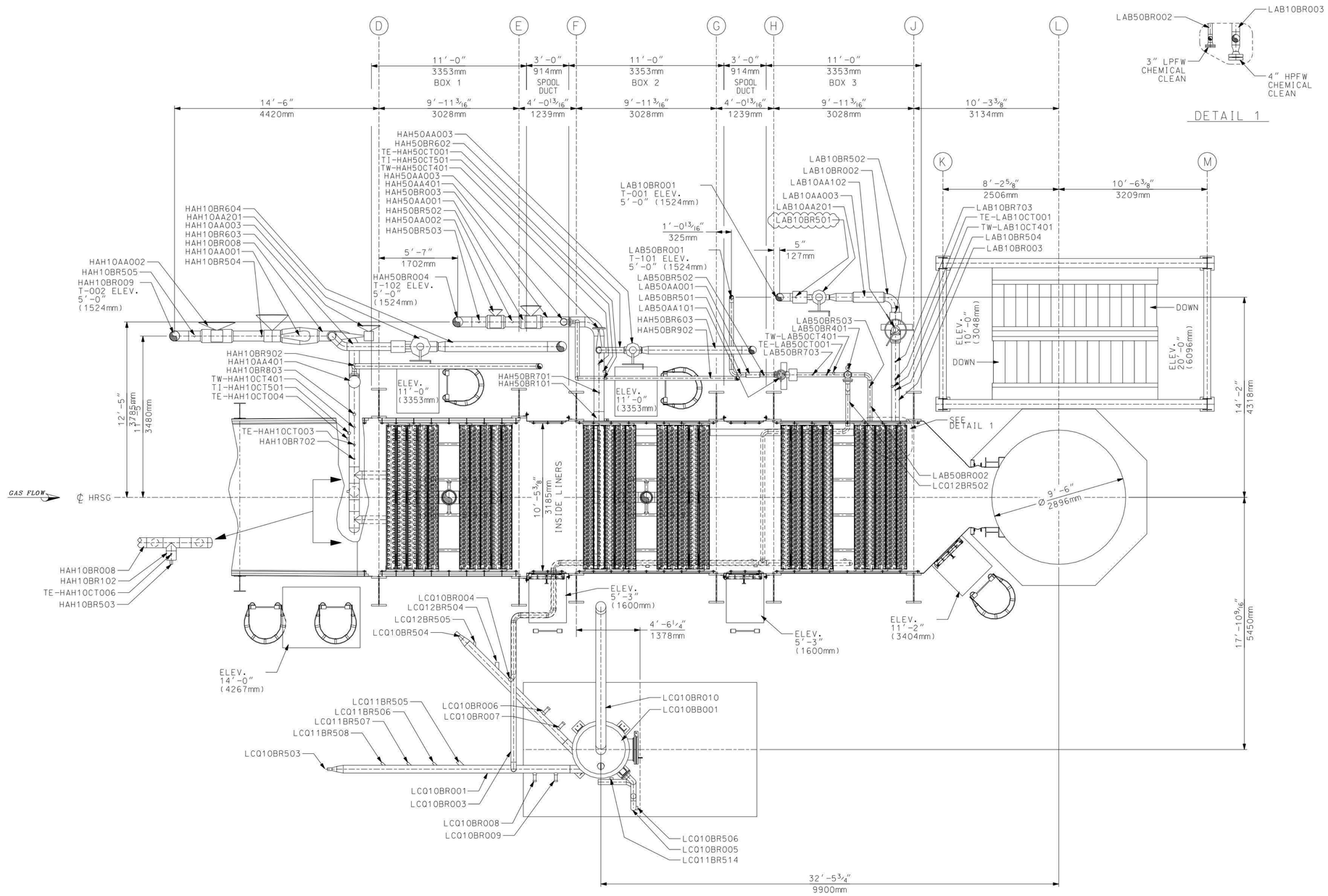

NOTES:

1) ALL PLATFORM ELEVATIONS ARE TO THE TOP OF GRATING.
2) (1) ONE UNIT SHOWN (2) UNITS TOTAL.

REFERENCE DRAWINGS:

V17460-GAND-001 THRU 003: GENERAL ARRANGEMENTS
ABPR2-M-S-HA-0125 THRU 0127

V17460-SEND-001 THRU 003: BOILER SETTINGS
ABPR2-M-S-HA-0685 THRU 0687

V17460-ICND-001 THRU 006: P&ID's
ABPR2-M-S-PD-0135 THRU 0140

V17460-FLND-001: FOUNDATION DIAGRAM
ABPR2-M-S-HA-0120

V17460-SENF-001: GENERAL NOTES AND DATA
ABPR2-K-S-HA-0152

Rev.	Description	Date	Drawn	Chkd. 1	Chkd. 2	Appr.
05						
04						
03						
02						
01	REVISE TITLE BLOCK	31-AUG-11	SK	GRP		DP
00	FIRST ISSUE	27-JUN-11	AS	GRP		DP

Revisions

This drawing contains Vogt Power International's confidential and proprietary information and cannot be used, duplicated or disclosed in whole or in part, except with the express written permission of Vogt Power International. EXCEPT AS EXPRESSLY STATED IN ANY WRITTEN CONTRACT - ALL WARRANTIES RELATING TO THIS DRAWING, INCLUDING THE WARRANTIES OF MERCHANTABILITY AND FITNESS, ARE DISCLAIMED.
© Vogt Power International, Inc. all rights reserved as an unpublished work.

OWNER

Amata B. Grimm Power (Rayong) 2 Limited

PROJECT

ABPR2 Combined Cycle Cogeneration Plant Project

CONTRACTOR

Sumitomo Corporation

TITLE

HRSG BOILER SETTING
PLAN SECTION

PROJECT CONTROL NO. ABPR2-M-S-HA-0687 REV. 1

Vogt Power International
4000 DuPont Circle
Louisville, Ky. 40207 USA
www.VogtPower.com

3rd ANGLE PROJECTION

Scale: 3/16″ = 1′-0″

Internal Drawing Status	Size	Drawing No.	Rev.
FOR RECORD	A1	V17460-SEND-003	01

VOGT POWER INTERNATIONAL	
For Construction / Fabrication	
Hugle, Kathy	Apr-11-2012

Vogt Power International, Inc. • 4000 Dupont Circle, Suite 400 • Louisville, Kentucky 40207

LINE LIST

For

SPP ABPR2 Amata City CCCP Project

For

Vogt Power International Job 17460

Amata B.Grimm Power (Rayong) 2 Limited

Vogt Power Document No. V17460-ICNA-001

Prepared by: **Bob Van Bogaert**
Senior Product Engineer

Reviewed by: **K. Hugle**
Project Engineer

Approved by: **M. Fisher**
Manager of Project Engineering

OWNER	**Amata B. Grimm Power (Rayong) 2 Limited**
PROJECT	**ABPR2 Combined Cycle Cogeneration Plant Project**
CONTRACTOR	**Sumitomo Corporation**
TITLE	**HRSG LINE LIST**

PROJECT CONTROL NO.	**ABPR2-K-S-HA-1001**	**REV. 3**

Rev.	Date	Engineer	Comments
0	29-Jun-2011	R. Van Bogaert	Original Issue
1	22-Sep-2011	R. Van Bogaert	Revise Client Title Block per Client comments.
2	21-Feb-2012	R. Van Bogaert	Revised per Client comments.
3	11-May-2012	Bill Lemos	Revised per Client comments.

1.0. DESCRIPTION OF LINE DESIGNATIONS

Note: Line Number correlates to P&ID V17460-ICND-002 through 006

1.1 Line Number

All tags are to be preceded with unit number “21” or “22” to represent the two units respectively, and “02” for the deaerator system.

AAA = SYSTEM ID

GMO = Injection System For Main Fluid
HAC = Economizer System
HAD = Drum / Evaporator System
HAH = Superheater System
HAN = Pressure System Drainage and Venting
HNA = Ductwork System (Exhaust Gas Side of HRSG)
~~HJG = Gas Pressure Reduction, Distribution~~
HNB = Bypass Damper
HNE = HRSG Exhaust Stack
LAA = Deaerator
LAB = Feedwater
LAC = Feedwater Pumps & Heat Exchanger
LAE = Attemperator (Desuperheater)
LBA = Main Steam Piping
LBG = Auxiliary Steam Piping
LBH = Blowdown Tank
LCA = Main Condensate Piping
LCQ = Blowdown System
~~LFN = Chemical Dosing System~~
PGA = Cooling Water System
~~QUA = Feedwater Sampling System~~
~~QUB = Steam Sampling System~~
~~QUC = Condensate Sampling System~~
~~QUH = Steam Generating Sampling System~~

BB = SUB SYSTEM ID

10 = HP System
20 = HP System
30 = Not Used
40 = Not Used
50 = LP System

CC = ITEM TYPE CODE

AA = Valves
AC = Attemperator
AT = Strainer / Separator
AP = Pumps
BB = Drum / Condensate Pots
BR = Lines
BS = Silencers
BU = Burner
CF = Flow Devices
CL = Level Devices
CG = Position Measurement
CP = Pressure Devices
CQ = Quality Variables
CT = Temperature Devices
CY = Vibration Devices
~~DG = Position Control Signal~~
~~DH = Local / Remote~~
~~DM = Damper~~
~~EJ = Expansion Joint~~
~~GH = Junction Boxes~~
~~GR = Distribution Grid~~
~~KC = Heat Exchanger~~
~~MB = Module Box / Ductwork~~
~~MS = Module Harps~~
~~SK = Outlet Stack~~
~~SR = SCR / Ammonia Injection~~

DDD = ITEM NUMBERING

"BR" Piping
001-499 = Piping (Generally)
501-599 = Drains
601-699 = Vents
701-799 = Internal Instruments Lines
801-899 = Sampling & Dosing Piping
901-999 = Lines To & From Safety Valves

X = Pressure Class Identifier

A = 4500#
B = 2500#
C = 1500#
D = 900#
E = 600#
G = 300#
H = 150#
X = No Class Required (Non Pressure Part)

Y = Material Type Identifier

A = SA-335 P-91
B = SA-335 P-22
C = SA-335 P-11
D = SA-106 Grade B
E = SA-106 Grade C
G = A-312 Type 316 SS
H = A-312 Type 316H SS
J = A-312 Type 304 SS
K = A-312 Type 304H SS

Z = Code Class Identifier

K = ASME Section I (Section I Jurisdiction/Tech - Boiler Proper)
H = ASME Section I (includes Section I Jurisdiction/ASME B31.1 Tech. - Boiler External Piping)
D = ASME B31.1
M = ASME Section VIII
T = ASME B31.3
X = Non-Code/Non Pressure Retaining

1.2 Small Bore Piping Schedules

Small bore piping schedules are based on design pressure and temperature, manufacturing tolerance of 12.5%, fabrication using socket weld fittings (no bending).

1.3 Insulation

Insulation thickness and material (Calcium Silicate) are based on VPI standard insulation charts.

Vogt Power International
HRSG LINE LIST

Line_Tag	Service	Size (DN)	Size (NPS)	Schedule	Spec	ANSI_Class	Pipe_Matl	Sys	D_Press (Bar)	D_Temp (C)	D_Press (PSIG)	D_Temp (F)	Insul Thk (mm)	Insul Thk (in)	Customer's PID No.	VPI PID's No.	Notes
HAC20BR001	HPEC OUTLET	150	6	80	DDK	900#	SA-106 GR.B	HP	99	312	1435	592	77	3	ABPR2-M-S-PD-0137	V17460-ICND-003-00.dgn	
HAC20BR002	HPEC 2-1 XOVER	125	5	80	DDK	900#	SA-106 GR.B	HP	99	312	1435	592	0	0	ABPR2-M-S-PD-0137	V17460-ICND-003-00.dgn	
HAC20BR003	HPEC 3-2 XOVER	125	5	80	DDK	900#	SA-106 GR.B	HP	99	312	1435	592	0	0	ABPR2-M-S-PD-0137	V17460-ICND-003-00.dgn	
HAC20BR004	HPEC 4-3 XOVER	125	5	80	DDK	900#	SA-106 GR.B	HP	99	312	1435	592	0	0	ABPR2-M-S-PD-0137	V17460-ICND-003-00.dgn	
HAC20BR005	HPEC 5-4 XOVER	125	5	80	DDK	900#	SA-106 GR.B	HP	99	312	1435	592	0	0	ABPR2-M-S-PD-0137	V17460-ICND-003-00.dgn	
HAC20BR006	HPEC 6-5 XOVER	125	5	80	DDK	900#	SA-106 GR.B	HP	99	312	1435	592	0	0	ABPR2-M-S-PD-0137	V17460-ICND-003-00.dgn	
HAC20BR007	HPEC 7-6 XOVER	125	5	80	DDK	900#	SA-106 GR.B	HP	99	312	1435	592	0	0	ABPR2-M-S-PD-0137	V17460-ICND-003-00.dgn	
HAC20BR008	HPEC 8-7 XOVER	125	5	80	DDK	900#	SA-106 GR.B	HP	99	312	1435	592	0	0	ABPR2-M-S-PD-0137	V17460-ICND-003-00.dgn	
HAC20BR009	HPEC 9-8 XOVER	125	5	80	DDK	900#	SA-106 GR.B	HP	99	312	1435	592	0	0	ABPR2-M-S-PD-0137	V17460-ICND-003-00.dgn	
HAC20BR010	HPEC A-9 XOVER	125	5	80	DDK	900#	SA-106 GR.B	HP	99	312	1435	592	0	0	ABPR2-M-S-PD-0137	V17460-ICND-003-00.dgn	
HAC20BR011	HPEC B-A XOVER	125	5	80	DDK	900#	SA-106 GR.B	HP	99	312	1435	592	0	0	ABPR2-M-S-PD-0137	V17460-ICND-003-00.dgn	
HAC20BR012	HPEC C-B XOVER	125	5	80	DDK	900#	SA-106 GR.B	HP	99	312	1435	592	0	0	ABPR2-M-S-PD-0137	V17460-ICND-003-00.dgn	
HAC20BR013	HPEC D-C XOVER	125	5	80	DDK	900#	SA-106 GR.B	HP	99	312	1435	592	0	0	ABPR2-M-S-PD-0137	V17460-ICND-003-00.dgn	
HAC20BR501	HPEC DRAIN	25	1	80	DDH	900#	SA-106 GR.B	HP	99	312	1435	592	64	2.5	ABPR2-M-S-PD-0137	V17460-ICND-003-00.dgn	
HAC20BR502	HPEC DRAIN	25	1	80	DDH	900#	SA-106 GR.B	HP	99	312	1435	592	64	2.5	ABPR2-M-S-PD-0137	V17460-ICND-003-00.dgn	
HAC20BR503	HPEC DRAIN	25	1	80	DDH	900#	SA-106 GR.B	HP	99	312	1435	592	64	2.5	ABPR2-M-S-PD-0137	V17460-ICND-003-00.dgn	
HAC20BR504	HPEC DRAIN	25	1	80	DDH	900#	SA-106 GR.B	HP	99	312	1435	592	64	2.5	ABPR2-M-S-PD-0137	V17460-ICND-003-00.dgn	
HAC20BR505	HPEC DRAIN	25	1	80	DDH	900#	SA-106 GR.B	HP	99	312	1435	592	64	2.5	ABPR2-M-S-PD-0137	V17460-ICND-003-00.dgn	
HAC20BR506	HPEC DRAIN	25	1	80	DDH	900#	SA-106 GR.B	HP	99	312	1435	592	64	2.5	ABPR2-M-S-PD-0137	V17460-ICND-003-00.dgn	
HAC20BR507	HPEC DRAIN	25	1	80	DDH	900#	SA-106 GR.B	HP	99	312	1435	592	64	2.5	ABPR2-M-S-PD-0137	V17460-ICND-003-00.dgn	
HAC20BR508	HPEC DRAIN	25	1	80	DDH	900#	SA-106 GR.B	HP	99	312	1435	592	64	2.5	ABPR2-M-S-PD-0137	V17460-ICND-003-00.dgn	
HAC20BR509	HPEC DRAIN	25	1	80	DDH	900#	SA-106 GR.B	HP	99	312	1435	592	64	2.5	ABPR2-M-S-PD-0137	V17460-ICND-003-00.dgn	
HAC20BR510	HPEC DRAIN	25	1	80	DDH	900#	SA-106 GR.B	HP	99	312	1435	592	64	2.5	ABPR2-M-S-PD-0137	V17460-ICND-003-00.dgn	
HAC20BR511	HPEC DRAIN	25	1	80	DDH	900#	SA-106 GR.B	HP	99	312	1435	592	64	2.5	ABPR2-M-S-PD-0137	V17460-ICND-003-00.dgn	
HAC20BR512	HPEC DRAIN	25	1	80	DDH	900#	SA-106 GR.B	HP	99	312	1435	592	64	2.5	ABPR2-M-S-PD-0137	V17460-ICND-003-00.dgn	
HAC20BR513	HPEC DRAIN	25	1	80	DDH	900#	SA-106 GR.B	HP	99	312	1435	592	64	2.5	ABPR2-M-S-PD-0137	V17460-ICND-003-00.dgn	
HAC20BR514	HPEC DRAIN COLLECTION	50	2	80	DDH	900#	SA-106 GR.B	HP	99	312	1435	592	64	2.5	ABPR2-M-S-PD-0137	V17460-ICND-003-00.dgn	
HAC20BR515	HPEC DRAIN COLLECTION	50	2	80	DDH	900#	SA-106 GR.B	HP	99	312	1435	592	64	2.5	ABPR2-M-S-PD-0137	V17460-ICND-003-00.dgn	
HAC20BR516	HPEC DRAIN COLLECTION	50	2	80	DDH	900#	SA-106 GR.B	HP	99	312	1435	592	64	2.5	ABPR2-M-S-PD-0137	V17460-ICND-003-00.dgn	
HAC20BR601	HPEC 1 VENT	25	1	80	DDH	900#	SA-106 GR.B	HP	99	312	1435	592	64	2.5	ABPR2-M-S-PD-0137	V17460-ICND-003-00.dgn	
HAC20BR602	HPEC 2 VENT	25	1	80	DDH	900#	SA-106 GR.B	HP	99	312	1435	592	64	2.5	ABPR2-M-S-PD-0137	V17460-ICND-003-00.dgn	
HAC20BR603	HPEC 3 VENT	25	1	80	DDH	900#	SA-106 GR.B	HP	99	312	1435	592	64	2.5	ABPR2-M-S-PD-0137	V17460-ICND-003-00.dgn	
HAC20BR604	HPEC 4 VENT	25	1	80	DDH	900#	SA-106 GR.B	HP	99	312	1435	592	64	2.5	ABPR2-M-S-PD-0137	V17460-ICND-003-00.dgn	
HAC20BR605	HPEC 4 VENT	25	1	80	DDH	900#	SA-106 GR.B	HP	99	312	1435	592	64	2.5	ABPR2-M-S-PD-0137	V17460-ICND-003-00.dgn	
HAC20BR606	HPEC 6 VENT	25	1	80	DDH	900#	SA-106 GR.B	HP	99	312	1435	592	64	2.5	ABPR2-M-S-PD-0137	V17460-ICND-003-00.dgn	
HAC20BR607	HPEC 7 VENT	25	1	80	DDH	900#	SA-106 GR.B	HP	99	312	1435	592	64	2.5	ABPR2-M-S-PD-0137	V17460-ICND-003-00.dgn	
HAC20BR608	HPEC 8 VENT	25	1	80	DDH	900#	SA-106 GR.B	HP	99	312	1435	592	64	2.5	ABPR2-M-S-PD-0137	V17460-ICND-003-00.dgn	
HAC20BR609	HPEC 9 VENT	25	1	80	DDH	900#	SA-106 GR.B	HP	99	312	1435	592	64	2.5	ABPR2-M-S-PD-0137	V17460-ICND-003-00.dgn	
HAC20BR610	HPEC A VENT	25	1	80	DDH	900#	SA-106 GR.B	HP	99	312	1435	592	64	2.5	ABPR2-M-S-PD-0137	V17460-ICND-003-00.dgn	
HAC20BR611	HPEC B VENT	25	1	80	DDH	900#	SA-106 GR.B	HP	99	312	1435	592	64	2.5	ABPR2-M-S-PD-0137	V17460-ICND-003-00.dgn	
HAC20BR612	HPEC C VENT	25	1	80	DDH	900#	SA-106 GR.B	HP	99	312	1435	592	64	2.5	ABPR2-M-S-PD-0137	V17460-ICND-003-00.dgn	
HAC20BR613	HPEC D VENT	25	1	80	DDH	900#	SA-106 GR.B	HP	99	312	1435	592	64	2.5	ABPR2-M-S-PD-0137	V17460-ICND-003-00.dgn	
HAC20BR614	HPEC MODULE VENT HEADER	50	2	80	DDH	900#	SA-106 GR.B	HP	99	312	1435	592	64	2.5	ABPR2-M-S-PD-0137	V17460-ICND-003-00.dgn	
HAC20BR615	HPEC MODULE VENT HEADER	50	2	80	DDH	900#	SA-106 GR.B	HP	99	312	1435	592	64	2.5	ABPR2-M-S-PD-0137	V17460-ICND-003-00.dgn	
HAC21BR801	CHEMICAL FEED	25	1	80	DDH	900#	SA-106 GR.B	HP	99	312	1435	592	64	2.5	ABPR2-M-S-PD-0137	V17460-ICND-003-00.dgn	
HAC21BR802	CHEMICAL FEED	25	1	80	DDH	900#	SA-106 GR.B	HP	99	312	1435	592	64	2.5	ABPR2-M-S-PD-0137	V17460-ICND-003-00.dgn	
HAC50BR001	LP ECON OUTLET	65	2.5	40	GDH	300#	SA-106 GR.B	LP	19	213	275	415	51	2	ABPR2-M-S-PD-0138	V17460-ICND-004-00.dgn	
HAC50BR002	LP ECON OUTLET	65	2.5	40	GDH	300#	SA-106 GR.B	LP	29.4	235	425	454	51	2	ABPR2-M-S-PD-0138	V17460-ICND-004-00.dgn	
HAC50BR003	LP ECON OUTLET	90	3.5	40	GDH	300#	SA-106 GR.B	LP	29.4	235	425	454	51	2	ABPR2-M-S-PD-0138	V17460-ICND-004-00.dgn	
HAC50BR004	LP ECON TO DA	80	3	40	GDH	300#	SA-106 GR.B	DA	29.4	235	425	454	51	2	ABPR2-M-S-PD-0138	V17460-ICND-004-00.dgn	
HAC50BR006	LP ECON 2-1 XOVER	90	3.5	40	GDK	300#	SA-106 GR.B	LP	29.4	235	425	454	0	0	ABPR2-M-S-PD-0138	V17460-ICND-004-00.dgn	
HAC50BR007	LP ECON 3-2 XOVER	90	3.5	40	GDK	300#	SA-106 GR.B	LP	29.4	235	425	454	0	0	ABPR2-M-S-PD-0138	V17460-ICND-004-00.dgn	
HAC50BR008	LP ECON 4-3 XOVER	90	3.5	40	GDK	300#	SA-106 GR.B	LP	29.4	235	425	454	0	0	ABPR2-M-S-PD-0138	V17460-ICND-004-00.dgn	
HAC50BR501	LP ECON MODULE DRAIN	25	1	80	GDH	300#	SA-106 GR.B	LP	29.4	235	425	454	39	1.5	ABPR2-M-S-PD-0138	V17460-ICND-004-00.dgn	
HAC50BR502	LP ECON MODULE DRAIN	25	1	80	GDH	300#	SA-106 GR.B	LP	29.4	235	425	454	39	1.5	ABPR2-M-S-PD-0138	V17460-ICND-004-00.dgn	
HAC50BR503	LP ECON MODULE DRAIN	25	1	80	GDH	300#	SA-106 GR.B	LP	29.4	235	425	454	39	1.5	ABPR2-M-S-PD-0138	V17460-ICND-004-00.dgn	
HAC50BR504	LP ECON MODULE DRAIN	25	1	80	GDH	300#	SA-106 GR.B	LP	29.4	235	425	454	39	1.5	ABPR2-M-S-PD-0138	V17460-ICND-004-00.dgn	
HAC50BR505	LP ECON MODULE DRAIN COLLECTION	50	2	80	GDH	300#	SA-106 GR.B	LP	29.4	235	425	454	39	1.5	ABPR2-M-S-PD-0138	V17460-ICND-004-00.dgn	
HAC50BR601	LP ECON MODULE VENT	25	1	80	GDH	300#	SA-106 GR.B	LP	29.4	235	425	454	39	1.5	ABPR2-M-S-PD-0138	V17460-ICND-004-00.dgn	
HAC50BR602	LP ECON MODULE VENT	25	1	80	GDH	300#	SA-106 GR.B	LP	29.4	235	425	454	39	1.5	ABPR2-M-S-PD-0138	V17460-ICND-004-00.dgn	
HAC50BR603	LP ECON MODULE VENT	25	1	80	GDH	300#	SA-106 GR.B	LP	29.4	235	425	454	39	1.5	ABPR2-M-S-PD-0138	V17460-ICND-004-00.dgn	
HAC50BR604	LP ECON MODULE VENT	25	1	80	GDH	300#	SA-106 GR.B	LP	29.4	235	425	454	39	1.5	ABPR2-M-S-PD-0138	V17460-ICND-004-00.dgn	
HAC50BR605	LP ECON MODULE VENT COLLECTION	50	2	80	GDH	300#	SA-106 GR.B	LP	29.4	235	425	454	39	1.5	ABPR2-M-S-PD-0138	V17460-ICND-004-00.dgn	
HAC50BR606	LP ECON MODULE VENT COLLECTION	50	2	80	GDH	300#	SA-106 GR.B	LP	29.4	235	425	454	39	1.5	ABPR2-M-S-PD-0138	V17460-ICND-004-00.dgn	
HAC50BR801	LP DRUM CHEMICAL FEED	25	1	80	GDH	300#	SA-106 GR.B	LP	19	213	275	415	39	1.5	ABPR2-M-S-PD-0138	V17460-ICND-004-00.dgn	
HAC50BR802	LP DRUM CHEMICAL FEED	25	1	80	GDH	300#	SA-106 GR.B	LP	19	213	275	415	39	1.5	ABPR2-M-S-PD-0138	V17460-ICND-004-00.dgn	
HAD10BR001	HPEV #1 RISER	125	5	80	DDK	900#	SA-106 GR.B	HP	92.4	307	1340	583	77	3	ABPR2-M-S-PD-0137	V17460-ICND-003-00.dgn	
HAD10BR002	HPEV #2 RISER	100	4	80	DDK	900#	SA-106 GR.B	HP	92.4	307	1340	583	77	3	ABPR2-M-S-PD-0137	V17460-ICND-003-00.dgn	
HAD10BR003	HPEV #3 RISER	80	3	80	DDK	900#	SA-106 GR.B	HP	92.4	307	1340	583	77	3	ABPR2-M-S-PD-0137	V17460-ICND-003-00.dgn	
HAD10BR004	HPEV #4 RISER	65	2.5	80	DDK	900#	SA-106 GR.B	HP	92.4	307	1340	583	64	2.5	ABPR2-M-S-PD-0137	V17460-ICND-003-00.dgn	
HAD10BR005	HPEV #5 RISER	65	2.5	80	DDK	900#	SA-106 GR.B	HP	92.4	307	1340	583	64	2.5	ABPR2-M-S-PD-0137	V17460-ICND-003-00.dgn	
HAD10BR006	HPEV COLLECTION HEADER	125	5	80	DDK	900#	SA-106 GR.B	HP	92.4	307	1340	583	77	3	ABPR2-M-S-PD-0137	V17460-ICND-003-00.dgn	
HAD10BR007	HPEV #1 FEEDER	100	4	80	DDK	900#	SA-106 GR.B	HP	92.4	307	1340	583	77	3	ABPR2-M-S-PD-0137	V17460-ICND-003-00.dgn	
HAD10BR008	HPEV #2 FEEDER	90	3.5	80	DDK	900#	SA-106 GR.B	HP	92.4	307	1340	583	77	3	ABPR2-M-S-PD-0137	V17460-ICND-003-00.dgn	
HAD10BR009	HPEV #3 FEEDER	65	2.5	80	DDK	900#	SA-106 GR.B	HP	92.4	307	1340	583	64	2.5	ABPR2-M-S-PD-0137	V17460-ICND-003-00.dgn	
HAD10BR010	HPEV #4 FEEDER	50	2	80	DDK	900#	SA-106 GR.B	HP	92.4	307	1340	583	64	2.5	ABPR2-M-S-PD-0137	V17460-ICND-003-00.dgn	
HAD10BR011	HPEV #5 FEEDER	50	2	80	DDK	900#	SA-106 GR.B	HP	92.4	307	1340	583	64	2.5	ABPR2-M-S-PD-0137	V17460-ICND-003-00.dgn	
HAD10BR012	HP DOWNCOMER	250	10	60	DDK	900#	SA-106 GR.B	HP	92.4	307	1340	583	89	3.5	ABPR2-M-S-PD-0137	V17460-ICND-003-00.dgn	
HAD10BR013	HPEV CHEMICAL CLEAN	100	4	80	DDH	900#	SA-106 GR.B	HP	92.4	307	1340	583	77	3	ABPR2-M-S-PD-0137	V17460-ICND-003-00.dgn	
HAD10BR501	HP CONTINUOUS BLOWDOWN	50	2	80	DDH	900#	SA-106 GR.B	HP	108	307	1565	583	64	2.5	ABPR2-M-S-PD-0137	V17460-ICND-003-00.dgn	
HAD10BR502	HP DRUM LEVEL GAUGE DRAIN	15	0.5	80	DDH	900#	SA-106 GR.B	HP	92.4	307	1340	583	64	2.5	ABPR2-M-S-PD-0137	V17460-ICND-003-00.dgn	
HAD10BR503	HP DRUM WATER COLUMN DRAIN	20	0.75	80	DDH	900#	SA-106 GR.B	HP	92.4	307	1340	583	64	2.5	ABPR2-M-S-PD-0137	V17460-ICND-003-00.dgn	

Line_Tag	Service	Size (DN)	Size (NPS)	Schedule	Spec	ANSI_Class	Pipe_Matl	Sys	D_Press (Bar)	D_Temp (C)	D_Press (PSIG)	D_Temp (F)	Insul Thk (mm)	Insul Thk (in)	Customer's PID No.	VPI PID's No.	Notes
HAD10BR504	HP INTERMITTENT BD	50	2	80	DDH	900#	SA-106 GR.B	HP	108	307	1565	583	64	2.5	ABPR2-M-S-PD-0137	V17460-ICND-003-00.dgn	
HAD10BR601	HP DRUM VENT	25	1	80	DDH	900#	SA-106 GR.B	HP	89.7	304	1300	579	64	2.5	ABPR2-M-S-PD-0137	V17460-ICND-003-00.dgn	
HAD10BR602	HP DRUM N2	25	1	80	DDH	900#	SA-106 GR.B	HP	89.7	304	1300	579	64	2.5	ABPR2-M-S-PD-0137	V17460-ICND-003-00.dgn	
HAD10BR701	HP DRUM LEVEL TRANSMITTER	25	1	80	DDH	900#	SA-106 GR.B	HP	92.4	307	1340	583	64	2.5	ABPR2-M-S-PD-0137	V17460-ICND-003-00.dgn	
HAD10BR702	HP DRUM LEVEL TRANSMITTER	25	1	80	DDH	900#	SA-106 GR.B	HP	92.4	307	1340	583	64	2.5	ABPR2-M-S-PD-0137	V17460-ICND-003-00.dgn	
HAD10BR703	HP DRUM LEVEL TRANSMITTER	25	1	80	DDH	900#	SA-106 GR.B	HP	92.4	307	1340	583	64	2.5	ABPR2-M-S-PD-0137	V17460-ICND-003-00.dgn	
HAD10BR704	HP DRUM LEVEL TRANSMITTER	25	1	80	DDH	900#	SA-106 GR.B	HP	92.4	307	1340	583	64	2.5	ABPR2-M-S-PD-0137	V17460-ICND-003-00.dgn	
HAD10BR705	HP DRUM LEVEL GAUGE	40	1.5	80	DDH	900#	SA-106 GR.B	HP	92.4	307	1340	583	64	2.5	ABPR2-M-S-PD-0137	V17460-ICND-003-00.dgn	
HAD10BR706	HP DRUM LEVEL GAUGE	40	1.5	80	DDH	900#	SA-106 GR.B	HP	92.4	307	1340	583	64	2.5	ABPR2-M-S-PD-0137	V17460-ICND-003-00.dgn	
HAD10BR709	HP DRUM PRESSURE TRANSMITTER	20	0.75	80	DDH	900#	SA-106 GR.B	HP	89.7	304	1300	579	64	2.5	ABPR2-M-S-PD-0137	V17460-ICND-003-00.dgn	
HAD10BR710	HP DRUM PRESSURE TRANSMITTER	20	0.75	80	DDH	900#	SA-106 GR.B	HP	89.7	304	1300	579	64	2.5	ABPR2-M-S-PD-0137	V17460-ICND-003-00.dgn	
HAD10BR711	HP DRUM PRESSURE INDICATOR	20	0.75	80	DDH	900#	SA-106 GR.B	HP	89.7	304	1300	579	64	2.5	ABPR2-M-S-PD-0137	V17460-ICND-003-00.dgn	
HAD10BR712	HP DRUM PRESSURE INDICATOR TEST	15	0.5	80	DDH	900#	SA-106 GR.B	HP	89.7	304	1300	579	64	2.5	ABPR2-M-S-PD-0137	V17460-ICND-003-00.dgn	
HAD10BR713	HP DRUM LEVEL TRANSMITTER	25	1	80	DDH	900#	SA-106 GR.B	HP	92.4	307	1340	583	64	2.5	ABPR2-M-S-PD-0137	V17460-ICND-003-00.dgn	
HAD10BR714	HP DRUM LEVEL TRANSMITTER	25	1	80	DDH	900#	SA-106 GR.B	HP	92.4	307	1340	583	64	2.5	ABPR2-M-S-PD-0137	V17460-ICND-003-00.dgn	
HAD10BR801	HP DRUM SAMPLE	20	0.75	80	DDH	900#	SA-106 GR.B	HP	92.4	307	1340	583	64	2.5	ABPR2-M-S-PD-0137	V17460-ICND-003-00.dgn	
HAD10BR901	HP DRUM SAFETY VALVE INLET #1	65	2.5	80	DDH	900#	SA-106 GR.B	HP	89.7	304	1300	579	64	2.5	ABPR2-M-S-PD-0137	V17460-ICND-003-00.dgn	
HAD10BR903	HP DRUM SAFETY VALVE OUTLET #1	150	6	40	GDD	300#	SA-106 GR.B	HP	14	205	202	400	51	2	ABPR2-M-S-PD-0137	V17460-ICND-003-00.dgn	
HAD11BR504	HP DRUM SRV DRAIN	15	0.5	80	HDD	150#	SA-106 GR.B	HP	13.8	177	200	350	0	0	ABPR2-M-S-PD-0140	V17460-ICND-006-00.dgn	
HAD11BR505	HP DRUM VENT DRAIN	15	0.5	80	HDD	150#	SA-106 GR.B	HP	13.8	177	200	350	0	0	ABPR2-M-S-PD-0140	V17460-ICND-006-00.dgn	
HAD11BR601	HP DRUM SRV VENT	15	0.5	80	HDD	150#	SA-106 GR.B	HP	13.8	177	200	350	0	0	ABPR2-M-S-PD-0140	V17460-ICND-006-00.dgn	
HAD50BR001	LP RISER #1	150	6	40	GCK	300#	SA-335 P11	LP	15.2	203	220	396	51	2	ABPR2-M-S-PD-0138	V17460-ICND-004-00.dgn	
HAD50BR002	LP RISER #2	100	4	40	GCK	300#	SA-335 P11	LP	15.2	203	220	396	51	2	ABPR2-M-S-PD-0138	V17460-ICND-004-00.dgn	
HAD50BR003	LP RISER #3	80	3	40	GCK	300#	SA-335 P11	LP	15.2	203	220	396	51	2	ABPR2-M-S-PD-0138	V17460-ICND-004-00.dgn	
HAD50BR004	LP RISER #4	65	2.5	80	GCK	300#	SA-335 P11	LP	15.2	203	220	396	51	2	ABPR2-M-S-PD-0138	V17460-ICND-004-00.dgn	
HAD50BR005	LP FEEDER #1	100	4	40	GDK	300#	SA-106 GR.B	LP	15.2	203	220	396	51	2	ABPR2-M-S-PD-0138	V17460-ICND-004-00.dgn	
HAD50BR006	LP FEEDER #2	80	3	40	GDK	300#	SA-106 GR.B	LP	15.2	203	220	396	51	2	ABPR2-M-S-PD-0138	V17460-ICND-004-00.dgn	
HAD50BR007	LP FEEDER #3	50	2	80	GDK	300#	SA-106 GR.B	LP	15.2	203	220	396	39	1.5	ABPR2-M-S-PD-0138	V17460-ICND-004-00.dgn	
HAD50BR008	LP FEEDER #4	50	2	80	GDK	300#	SA-106 GR.B	LP	15.2	203	220	396	39	1.5	ABPR2-M-S-PD-0138	V17460-ICND-004-00.dgn	
HAD50BR009	LP DOWNCOMER	200	8	40	GDK	300#	SA-106 GR.B	LP	15.2	203	220	396	51	2	ABPR2-M-S-PD-0138	V17460-ICND-004-00.dgn	
HAD50BR010	LP CHEMICAL CLEAN	100	4	40	GDH	300#	SA-106 GR.B	LP	15.2	203	220	396	51	2	ABPR2-M-S-PD-0138	V17460-ICND-004-00.dgn	
HAD50BR501	LP CONTINUOUS BD	50	2	80	GDH	300#	SA-106 GR.B	LP	15.2	203	220	396	39	1.5	ABPR2-M-S-PD-0138	V17460-ICND-004-00.dgn	
HAD50BR502	LP LEVEL GAUGE DRAIN	15	0.5	80	HDH	150#	SA-106 GR.B	LP	15.2	203	220	396	39	1.5	ABPR2-M-S-PD-0138	V17460-ICND-004-00.dgn	
HAD50BR503	LP WATER COLUMN DRAIN	20	0.75	80	HDH	150#	SA-106 GR.B	LP	15.2	203	220	396	39	1.5	ABPR2-M-S-PD-0138	V17460-ICND-004-00.dgn	
HAD50BR504	LP INTERMITTENT BD	50	2	80	GDH	300#	SA-106 GR.B	LP	19	203	275	396	39	1.5	ABPR2-M-S-PD-0138	V17460-ICND-004-00.dgn	
HAD50BR601	LP DRUM VENT	25	1	80	HDH	150#	SA-106 GR.B	LP	12.5	194	180	380	39	1.5	ABPR2-M-S-PD-0138	V17460-ICND-004-00.dgn	
HAD50BR602	LP DRUM N2	25	1	80	HDH	150#	SA-106 GR.B	LP	12.5	194	180	380	39	1.5	ABPR2-M-S-PD-0138	V17460-ICND-004-00.dgn	
HAD50BR701	LP DRUM LEVEL TRANSMITTER	25	1	80	HDH	150#	SA-106 GR.B	LP	15.2	203	220	396	39	1.5	ABPR2-M-S-PD-0138	V17460-ICND-004-00.dgn	
HAD50BR702	LP DRUM LEVEL TRANSMITTER	25	1	80	HDH	150#	SA-106 GR.B	LP	15.2	203	220	396	39	1.5	ABPR2-M-S-PD-0138	V17460-ICND-004-00.dgn	
HAD50BR703	LP DRUM LEVEL TRANSMITTER	25	1	80	HDH	150#	SA-106 GR.B	LP	15.2	203	220	396	39	1.5	ABPR2-M-S-PD-0138	V17460-ICND-004-00.dgn	
HAD50BR704	LP DRUM LEVEL TRANSMITTER	25	1	80	HDH	150#	SA-106 GR.B	LP	15.2	203	220	396	39	1.5	ABPR2-M-S-PD-0138	V17460-ICND-004-00.dgn	
HAD50BR705	LP DRUM LEVEL GAUGE	40	1.5	80	HDH	150#	SA-106 GR.B	LP	15.2	203	220	396	39	1.5	ABPR2-M-S-PD-0138	V17460-ICND-004-00.dgn	
HAD50BR706	LP DRUM LEVEL GAUGE	40	1.5	80	HDH	150#	SA-106 GR.B	LP	15.2	203	220	396	39	1.5	ABPR2-M-S-PD-0138	V17460-ICND-004-00.dgn	
HAD50BR708	LP DRUM PRESSURE TRANSMITTER	20	0.75	80	HDH	150#	SA-106 GR.B	LP	12.5	194	180	380	39	1.5	ABPR2-M-S-PD-0138	V17460-ICND-004-00.dgn	
HAD50BR709	LP DRUM PRESSURE TRANSMITTER	20	0.75	80	HDH	150#	SA-106 GR.B	LP	12.5	194	180	380	39	1.5	ABPR2-M-S-PD-0138	V17460-ICND-004-00.dgn	
HAD50BR710	LP DRUM PRESSURE GAUGE	20	0.75	80	HDH	150#	SA-106 GR.B	LP	12.5	194	180	380	39	1.5	ABPR2-M-S-PD-0138	V17460-ICND-004-00.dgn	
HAD50BR711	LP DRUM PRESSURE TEST	15	0.5	80	HDH	150#	SA-106 GR.B	LP	12.5	194	180	380	39	1.5	ABPR2-M-S-PD-0138	V17460-ICND-004-00.dgn	
HAD50BR712	LP DRUM LEVEL TRANSMITTER	25	1	80	HDH	150#	SA-106 GR.B	LP	15.2	203	220	396	39	1.5	ABPR2-M-S-PD-0138	V17460-ICND-004-00.dgn	
HAD50BR713	LP DRUM LEVEL TRANSMITTER	25	1	80	HDH	150#	SA-106 GR.B	LP	15.2	203	220	396	39	1.5	ABPR2-M-S-PD-0138	V17460-ICND-004-00.dgn	
HAD50BR801	LP DRUM SAMPLE	20	0.75	80	HDH	150#	SA-106 GR.B	LP	15.2	203	220	396	39	1.5	ABPR2-M-S-PD-0138	V17460-ICND-004-00.dgn	
HAD50BR901	LP DRUM SAFETY VALVE INLET #1	40	1.5	80	HDH	150#	SA-106 GR.B	LP	12.5	194	180	380	39	1.5	ABPR2-M-S-PD-0138	V17460-ICND-004-00.dgn	
HAD50BR902	LP DRUM SAFETY VALVE INLET #2	40	1.5	80	HDH	150#	SA-106 GR.B	LP	12.5	194	180	380	39	1.5	ABPR2-M-S-PD-0138	V17460-ICND-004-00.dgn	
HAD50BR903	LP DRUM SAFETY VALVE OUTLET #1	100	4	40	HDD	150#	SA-106 GR.B	LP	3.5	177	50	350	51	2	ABPR2-M-S-PD-0138	V17460-ICND-004-00.dgn	
HAD50BR904	LP DRUM SAFETY VALVE OUTLET #2	100	4	40	HDD	150#	SA-106 GR.B	LP	3.5	177	50	350	51	2	ABPR2-M-S-PD-0138	V17460-ICND-004-00.dgn	
HAD51BR504	LP DRUM SRV DRAIN	15	0.5	80	HDD	150#	SA-106 GR.B	LP	3.5	94	50	200	0	0	ABPR2-M-S-PD-0140	V17460-ICND-006-00.dgn	
HAD51BR505	LP DRUM VENT DRAIN	15	0.5	80	HDD	150#	SA-106 GR.B	LP	3.5	94	50	200	0	0	ABPR2-M-S-PD-0140	V17460-ICND-006-00.dgn	
HAD51BR506	LP DRUM SRV DRAIN	15	0.5	80	HDD	150#	SA-106 GR.B	LP	3.5	94	50	200	0	0	ABPR2-M-S-PD-0140	V17460-ICND-006-00.dgn	
HAD51BR507	LP DRUM VENT DRAIN	15	0.5	80	HDD	150#	SA-106 GR.B	LP	3.5	94	50	200	0	0	ABPR2-M-S-PD-0140	V17460-ICND-006-00.dgn	
HAH10BR001	HPSH INLET	125	5	40	DDK	900#	SA-106 GR.B	HP	89.7	304	1300	579	77	3	ABPR2-M-S-PD-0137	V17460-ICND-003-00.dgn	
HAH10BR002	HPSH #3 - #2 XOVER	125	5	80	DCK	900#	SA-335 P11	HP	89.7	406	1300	762	0	0	ABPR2-M-S-PD-0137	V17460-ICND-003-00.dgn	
HAH10BR003	HPSH 2 TO ATTEMPERATOR	150	6	80	CBK	1500#	SA-335 P22	HP	89.7	500	1300	931	115	4.5	ABPR2-M-S-PD-0137	V17460-ICND-003-00.dgn	
HAH10BR004	HPSH ATTEMP.	250	10	100	CBK	1500#	SA-335 P22	HP	89.7	500	1300	931	127	5	ABPR2-M-S-PD-0137	V17460-ICND-003-00.dgn	
HAH10BR005	HPSH ATTEMP.	250	10	100	CBK	1500#	SA-335 P22	HP	89.7	500	1300	931	127	5	ABPR2-M-S-PD-0137	V17460-ICND-003-00.dgn	
HAH10BR006	HPSH ATTEMP. OUTLET	150	6	80	DBK	900#	SA-335 P22	HP	89.7	487	1300	908	115	4.5	ABPR2-M-S-PD-0137	V17460-ICND-003-00.dgn	
HAH10BR007	HPSH OUTLET FEEDER	150	6	160	CBH	1500#	SA-335 P22	HP	85.2	534	1235	992	127	5	ABPR2-M-S-PD-0137	V17460-ICND-003-00.dgn	
HAH10BR008	HPSH OUTLET	200	8	120	CBH	1500#	SA-335 P22	HP	85.2	534	1235	992	140	5.5	ABPR2-M-S-PD-0137	V17460-ICND-003-00.dgn	
HAH10BR009	HPSH OUTLET	200	8	120	CBD	1500#	SA-335 P22	HP	85.2	534	1235	992	140	5.5	ABPR2-M-S-PD-0137	V17460-ICND-003-00.dgn	
HAH10BR101	HP ATTEMP DRAIN POT	250	10	100	CBK	1500#	SA-335 P22	HP	89.7	500	1300	931	127	5	ABPR2-M-S-PD-0137	V17460-ICND-003-00.dgn	
HAH10BR102	HP ATTEMP DRAIN POT	200	8	120	CBH	1500#	SA-335 P22	HP	85.2	534	1235	992	140	5.5	ABPR2-M-S-PD-0137	V17460-ICND-003-00.dgn	
HAH10BR501	HPSH #3 - #2 XOVER DRAIN	25	1	80	DCH	900#	SA-335 P11	HP	105.2	406	1525	762	89	3.5	ABPR2-M-S-PD-0137	V17460-ICND-003-00.dgn	
HAH10BR502	HPSH ATTEMP. DRAIN POT DRAIN	25	1	80	CBH	1500#	SA-335 P22	HP	105.2	500	1525	931	102	4	ABPR2-M-S-PD-0137	V17460-ICND-003-00.dgn	
HAH10BR503	HPSH OUTLET DRAIN	25	1	80	BBH	2500#	SA-335 P22	HP	100.7	534	1460	992	102	4	ABPR2-M-S-PD-0137	V17460-ICND-003-00.dgn	
HAH10BR504	HPSH OUTLET DRAIN	25	1	80	CBH	1500#	SA-335 P22	HP	85.2	534	1235	992	102	4	ABPR2-M-S-PD-0137	V17460-ICND-003-00.dgn	
HAH10BR505	HPSH OUTLET DRAIN	25	1	80	CBD	1500#	SA-335 P22	HP	85.2	534	1235	992	102	4	ABPR2-M-S-PD-0137	V17460-ICND-003-00.dgn	
HAH10BR601	HPSH INLET HYDRO VENT	25	1	80	DDH	900#	SA-106 GR.B	HP	89.7	304	1300	579	64	2.5	ABPR2-M-S-PD-0137	V17460-ICND-003-00.dgn	
HAH10BR602	HP ATTEMPERATOR HYDRO VENT	25	1	80	CBH	1500#	SA-335 P22	HP	89.7	500	1300	931	102	4	ABPR2-M-S-PD-0137	V17460-ICND-003-00.dgn	
HAH10BR603	HPSH START UP VENT INLET	150	6	120	CBH	1500#	SA-335 P22	HP	85.2	534	1235	992	127	5	ABPR2-M-S-PD-0137	V17460-ICND-003-00.dgn	
HAH10BR604	HPSH START UP VENT OUTLET	200	8	40	GCD	300#	SA-335 P11	HP	6.7	538	97	1000	127	5	ABPR2-M-S-PD-0137	V17460-ICND-003-00.dgn	
HAH10BR701	HP ATTEMP. PRESS IND TRANSMITTER	20	0.75	80	CBH	1500#	SA-335 P22	HP	89.7	500	1300	931	102	4	ABPR2-M-S-PD-0137	V17460-ICND-003-00.dgn	
HAH10BR702	HPSH OUTLET FEED PRESS IND	20	0.75	80	CBH	1500#	SA-335 P22	HP	85.2	534	1235	992	102	4	ABPR2-M-S-PD-0137	V17460-ICND-003-00.dgn	
HAH10BR703	HPSH OUTLET FEED PRESS TRANS	20	0.75	80	CBH	1500#	SA-335 P22	HP	85.2	534	1235	992	102	4	ABPR2-M-S-PD-0137	V17460-ICND-003-00.dgn	
HAH10BR801	HP SAT STEAM SAMPLE	8	0.25	0.049"	DHH	900#	A-312 TP316H	HP	89.7	304	1300	579	64	2.5	ABPR2-M-S-PD-0137	V17460-ICND-003-00.dgn	

Line_Tag	Service	Size (DN)	Size (NPS)	Schedule	Spec	ANSI_Class	Pipe_Matl	Sys	D_Press (Bar)	D_Temp (C)	D_Press (PSIG)	D_Temp (F)	Insul Thk (mm)	Insul Thk (in)	Customer's PID No.	VPI PID's No.	Notes
HAH10BR803	HPSH STEAM GLAND TAP	40	1.5	80	CBH	1500#	SA-335 P22	HP	85.2	534	1235	992	102	4	ABPR2-M-S-PD-0137	V17460-ICND-003-00.dgn	
HAH10BR901	HPSH SAFETY VALVE INLET	50	2	80	CBH	1500#	SA-335 P22	HP	85.2	534	1235	992	102	4	ABPR2-M-S-PD-0137	V17460-ICND-003-00.dgn	
HAH10BR902	HPSH SAFETY VALVE OUTLET	100	4	40	GCD	300#	SA-335 P11	HP	13.3	510	192	950	102	4	ABPR2-M-S-PD-0137	V17460-ICND-003-00.dgn	
HAH12BR501	HPSH SRV BODY DRAIN	15	0.5	80	GCD	300#	SA-335 P11	HP	10.4	483	150	900	0	0	ABPR2-M-S-PD-0140	V17460-ICND-006-00.dgn	
HAH12BR502	HPSH SRV VENT DRAIN	15	0.5	80	GCD	300#	SA-335 P11	HP	10.4	483	150	900	0	0	ABPR2-M-S-PD-0140	V17460-ICND-006-00.dgn	
HAH12BR503	HPSH SILENCER DRAIN	50	2	80	HDD	150#	SA-106 GR.B	HP	6.9	177	100	350	0	0	ABPR2-M-S-PD-0140	V17460-ICND-006-00.dgn	
HAH12BR601	HPSH SRV VENT	32	1.25	80	GCD	300#	SA-335 P11	HP	6.9	483	100	900	0	0	ABPR2-M-S-PD-0140	V17460-ICND-006-00.dgn	
HAH50BR001	LPSH INLET	150	6	40	HDK	150#	SA-106 GR.B	LP	12.5	194	180	380	51	2	ABPR2-M-S-PD-0138	V17460-ICND-004-00.dgn	
HAH50BR002	LPSH OUTLET FEEDER	150	6	40	HDH	150#	SA-106 GR.B	LP	11.1	256	160	492	51	2	ABPR2-M-S-PD-0138	V17460-ICND-004-00.dgn	
HAH50BR003	LPSH MAIN STEAM	200	8	40	HDH	150#	SA-106 GR.B	LP	11.1	256	160	492	51	2	ABPR2-M-S-PD-0138	V17460-ICND-004-00.dgn	
HAH50BR004	LPSH MAIN STEAM	200	8	40	HDD	150#	SA-106 GR.B	LP	11.1	256	160	492	51	2	ABPR2-M-S-PD-0138	V17460-ICND-004-00.dgn	
HAH50BR101	LPSH DRAIN POT	200	8	40	HDH	150#	SA-106 GR.B	LP	11.1	256	160	492	51	2	ABPR2-M-S-PD-0138	V17460-ICND-004-00.dgn	
HAH50BR501	LPSH OUTLET DRAIN	25	1	80	GDH	300#	SA-106 GR.B	LP	13.8	256	200	492	39	1.5	ABPR2-M-S-PD-0138	V17460-ICND-004-00.dgn	
HAH50BR502	LPSH OUTLET DRAIN	25	1	80	HDH	150#	SA-106 GR.B	LP	11.1	256	160	492	39	1.5	ABPR2-M-S-PD-0138	V17460-ICND-004-00.dgn	
HAH50BR503	LPSH OUTLET DRAIN	25	1	80	HDD	150#	SA-106 GR.B	LP	11.1	256	160	492	39	1.5	ABPR2-M-S-PD-0138	V17460-ICND-004-00.dgn	
HAH50BR601	LPSH INLET HYDRO VENT	25	1	80	HDH	150#	SA-106 GR.B	LP	12.5	194	180	380	39	1.5	ABPR2-M-S-PD-0138	V17460-ICND-004-00.dgn	
HAH50BR602	LPSH OUTLET START UP VENT	100	4	40	HDH	150#	SA-106 GR.B	LP	11.1	256	160	492	51	2	ABPR2-M-S-PD-0138	V17460-ICND-004-00.dgn	
HAH50BR603	LPSH START UP VENT OUTLET	150	6	40	HDD	150#	SA-106 GR.B	LP	3.5	247	50	475	51	2	ABPR2-M-S-PD-0138	V17460-ICND-004-00.dgn	
HAH50BR701	LPSH OUTLET PRESSURE GAUGE	20	0.75	80	HDH	150#	SA-106 GR.B	LP	11.1	256	160	492	39	1.5	ABPR2-M-S-PD-0138	V17460-ICND-004-00.dgn	
HAH50BR702	LPSH OUTLET PRESSURE TRANSMITTER	20	0.75	80	HDH	150#	SA-106 GR.B	LP	11.1	256	160	492	39	1.5	ABPR2-M-S-PD-0138	V17460-ICND-004-00.dgn	
HAH50BR901	LPSH OUTLET SAFETY VALVE	40	1.5	80	HDH	150#	SA-106 GR.B	LP	11.1	256	160	492	39	1.5	ABPR2-M-S-PD-0138	V17460-ICND-004-00.dgn	
HAH50BR902	LPSH OUTLET SAFETY VALVE OUTLET	80	3	40	HDD	150#	SA-106 GR.B	LP	3.5	233	50	450	51	2	ABPR2-M-S-PD-0138	V17460-ICND-004-00.dgn	
HAH52BR501	LPSH SRV BODY DRAIN	15	0.5	80	HDD	150#	SA-106 GR.B	LP	3.5	66	50	150	0	0	ABPR2-M-S-PD-0140	V17460-ICND-006-00.dgn	
HAH52BR502	LPSH SRV VENT DRAIN	15	0.5	80	HDD	150#	SA-106 GR.B	LP	3.5	66	50	150	0	0	ABPR2-M-S-PD-0140	V17460-ICND-006-00.dgn	
HAH52BR503	LPSH SILENCER DRAIN	50	2	80	HDD	150#	SA-106 GR.B	LP	3.5	66	50	150	0	0	ABPR2-M-S-PD-0140	V17460-ICND-006-00.dgn	
HNA10BR501	INLET DUCT DRAIN	80	3	40	HDX	150#	SA-106 GR.B	XX	0.7	316	10	600	64	2.5	ABPR2-M-S-PD-0136	V17460-ICND-002-00.dgn	
HNA10BR502	BOX 1 CASING DRAIN	80	3	40	HDX	150#	SA-106 GR.B	XX	0.7	316	10	600	64	2.5	ABPR2-M-S-PD-0136	V17460-ICND-002-00.dgn	
HNA10BR503	BOX 2 CASING DRAIN	80	3	40	HDX	150#	SA-106 GR.B	XX	0.7	316	10	600	64	2.5	ABPR2-M-S-PD-0136	V17460-ICND-002-00.dgn	
HNA10BR504	BOX 3 CASING DRAIN	80	3	40	HDX	150#	SA-106 GR.B	XX	0.7	316	10	600	64	2.5	ABPR2-M-S-PD-0136	V17460-ICND-002-00.dgn	
HNB10BR701	TRANSITION DUCT PRESS TRANSMITTER	25	1	80	HJX	150#	A-312 TP304	XX	3.5	622	50	1150	127	5	ABPR2-M-S-PD-0136	V17460-ICND-002-00.dgn	
HNB10BR702	TRANSITION DUCT PRESS TRANSMITTER	25	1	80	HJX	150#	A-312 TP304	XX	3.5	622	50	1150	127	5	ABPR2-M-S-PD-0136	V17460-ICND-002-00.dgn	
HNB10BR703	TRANSITION DUCT PRESS TRANSMITTER	25	1	80	HJX	150#	A-312 TP304	XX	3.5	622	50	1150	127	5	ABPR2-M-S-PD-0136	V17460-ICND-002-00.dgn	
HNB10BR704	TRANSITION DUCT PRESS TRANSMITTER	25	1	80	HJX	150#	A-312 TP304	XX	3.5	622	50	1150	127	5	ABPR2-M-S-PD-0136	V17460-ICND-002-00.dgn	
HNE10BR501	STACK DRAIN	80	3	40	HJD	150#	A-312 TP304	XX	1.1	177	15	350	51	2	ABPR2-M-S-PD-0136	V17460-ICND-002-00.dgn	
HNE20BR501	TRANSITION DUCT DRAIN	80	3	40	HDX	150#	SA-106 GR.B	XX	0.7	316	10	600	64	2.5	ABPR2-M-S-PD-0136	V17460-ICND-002-00.dgn	
LAA10BR002	LP ECON TO DA (BY OTHERS)	80	3	40	GDH	300#	SA-106 GR.B	DA	29.4	235	425	454	51	2	ABPR2-M-S-PD-0139	V17460-ICND-005-00.dgn	
LAA10BR013	DA TO STORAGE TANK	500	20	40	HDH	150#	SA-106 GR.B	DA	3.5	122	50	250	39	1.5	ABPR2-M-S-PD-0139	V17460-ICND-005-00.dgn	
LAA10BR014	CONDENSATE TO DA NOZZLE	200	8	40	HDD	150#	SA-106 GR.B	DA	3.5	122	50	250	39	1.5	ABPR2-M-S-PD-0139	V17460-ICND-005-00.dgn	
LAA10BR015	LP ECON TO DA (BY OTHERS)	200	8	40	GDH	300#	SA-106 GR.B	DA	29.4	235	425	454	51	2	ABPR2-M-S-PD-0139	V17460-ICND-005-00.dgn	
LAA10BR016	LP ECON TO DA (BY OTHERS)	200	8	40	HDD	150#	SA-106 GR.B	DA	3.5	122	50	250	39	1.5	ABPR2-M-S-PD-0139	V17460-ICND-005-00.dgn	
LAA10BR501	LP ECON TO DA DRAIN (BY OTHERS)	25	1	80	GDH	300#	SA-106 GR.B	DA	29.4	235	425	454	39	1.5	ABPR2-M-S-PD-0139	V17460-ICND-005-00.dgn	
LAA10BR505	DA LEVEL GAUGE DRAIN (BY OTHERS)	15	0.5	80	HDD	150#	SA-106 GR.B	DA	3.5	122	50	250	26	1	ABPR2-M-S-PD-0139	V17460-ICND-005-00.dgn	
LAA10BR601	DA VENT (BY OTHERS)	80	3	40	HDD	150#	SA-106 GR.B	DA	3.5	122	50	250	26	1	ABPR2-M-S-PD-0139	V17460-ICND-005-00.dgn	
LAA10BR602	DA N2 FILL NOZZLE	25	1	80	HDD	150#	SA-106 GR.B	DA	3.5	122	50	250	26	1	ABPR2-M-S-PD-0139	V17460-ICND-005-00.dgn	
LAA10BR701	LP ECON FLOW TRANMITTER (BY OTHERS)	20	0.75	80	GDH	300#	SA-106 GR.B	DA	29.4	235	425	454	39	1.5	ABPR2-M-S-PD-0139	V17460-ICND-005-00.dgn	
LAA10BR702	LP ECON FLOW TRANMITTER (BY OTHERS)	20	0.75	80	GDH	300#	SA-106 GR.B	DA	29.4	235	425	454	39	1.5	ABPR2-M-S-PD-0139	V17460-ICND-005-00.dgn	
LAA10BR703	DA LEVEL GAUGE NOZZLE	40	1.5	80	HDD	150#	SA-106 GR.B	DA	3.5	177	50	350	26	1	ABPR2-M-S-PD-0139	V17460-ICND-005-00.dgn	
LAA10BR704	DA LEVEL GAUGE NOZZLE	40	1.5	80	HDD	150#	SA-106 GR.B	DA	3.5	177	50	350	26	1	ABPR2-M-S-PD-0139	V17460-ICND-005-00.dgn	
LAA10BR705	DA LEVEL TRANSMITTER NOZZLE	25	1	80	HDD	150#	SA-106 GR.B	DA	3.5	177	50	350	26	1	ABPR2-M-S-PD-0139	V17460-ICND-005-00.dgn	
LAA10BR706	DA LEVEL TRANSMITTER NOZZLE	25	1	80	HDD	150#	SA-106 GR.B	DA	3.5	177	50	350	26	1	ABPR2-M-S-PD-0139	V17460-ICND-005-00.dgn	
LAA10BR707	DA PRESSURE INDICATOR NOZZLE (BY OTHERS)	20	0.75	80	HDD	150#	SA-106 GR.B	DA	3.5	177	50	350	26	1	ABPR2-M-S-PD-0139	V17460-ICND-005-00.dgn	
LAA10BR708	DA PRESSURE TRANSMITTER (BY OTHERS)	20	0.75	80	HDD	150#	SA-106 GR.B	DA	3.5	177	50	350	26	1	ABPR2-M-S-PD-0139	V17460-ICND-005-00.dgn	
LAA10BR709	DA LEVEL TRANSMITTER NOZZLE	25	1	80	HDD	150#	SA-106 GR.B	DA	3.5	177	50	350	26	1	ABPR2-M-S-PD-0139	V17460-ICND-005-00.dgn	
LAA10BR710	DA LEVEL TRANSMITTER NOZZLE	25	1	80	HDD	150#	SA-106 GR.B	DA	3.5	177	50	350	26	1	ABPR2-M-S-PD-0139	V17460-ICND-005-00.dgn	
LAA10BR711	DA LEVEL TRANSMITTER NOZZLE	25	1	80	HDD	150#	SA-106 GR.B	DA	3.5	177	50	350	26	1	ABPR2-M-S-PD-0139	V17460-ICND-005-00.dgn	
LAA10BR712	DA LEVEL TRANSMITTER NOZZLE	25	1	80	HDD	150#	SA-106 GR.B	DA	3.5	177	50	350	26	1	ABPR2-M-S-PD-0139	V17460-ICND-005-00.dgn	
LAA10BR801	DA CHEMICAL FEED NOZZLE (BY OTHERS)	25	1	80	HDD	150#	SA-106 GR.B	DA	3.5	177	50	350	26	1	ABPR2-M-S-PD-0139	V17460-ICND-005-00.dgn	
LAA10BR901	DA SAFETY VALVE INLET NOZZLE (BY OTHERS)	100	4	40	HDD	150#	SA-106 GR.B	DA	3.5	177	50	350	39	1.5	ABPR2-M-S-PD-0139	V17460-ICND-005-00.dgn	
LAA10BR902	DA SAFETY VALVE OUTLET (BY OTHERS)	300	12	40	HDD	150#	SA-106 GR.B	DA	3.5	177	50	350	51	2	ABPR2-M-S-PD-0139	V17460-ICND-005-00.dgn	
LAA11BR502	DA SRV DRAIN	15	0.5	80	HDD	150#	SA-106 GR.B	DA	3.5	66	50	150	0	0	ABPR2-M-S-PD-0140	V17460-ICND-006-00.dgn	
LAA11BR503	DA VENT DRAIN	15	0.5	80	HDD	150#	SA-106 GR.B	DA	3.5	38	50	100	0	0	ABPR2-M-S-PD-0140	V17460-ICND-006-00.dgn	
LAA11BR504	DA SILENCER DRAIN	50	2	80	HDD	150#	SA-106 GR.B	DA	3.5	66	50	150	0	0	ABPR2-M-S-PD-0140	V17460-ICND-006-00.dgn	
LAA11BR602	DA SRV VENT	25	1	80	HDD	150#	SA-106 GR.B	DA	3.5	38	50	100	0	0	ABPR2-M-S-PD-0140	V17460-ICND-006-00.dgn	
LAB10BR001	HP ECONOMIZER INLET	150	6	80	DDD	900#	SA-106 GR.B	HP	127.3	122	1845	250	39	1.5	ABPR2-M-S-PD-0137	V17460-ICND-003-00.dgn	
LAB10BR002	HP ECONOMIZER INLET	150	6	80	CDH	1500#	SA-106 GR.B	HP	127.3	323	1845	612	77	3	ABPR2-M-S-PD-0137	V17460-ICND-003-00.dgn	
LAB10BR003	HP ECONOMIZER INLET	150	6	80	DDH	900#	SA-106 GR.B	HP	114.5	323	1660	612	77	3	ABPR2-M-S-PD-0137	V17460-ICND-003-00.dgn	
LAB10BR004	HP FW FLOW ELEMENT	150	6	80	DDD	900#	SA-106 GR.B	HP	127.3	122	1845	250	39	1.5	ABPR2-M-S-PD-0137	V17460-ICND-003-00.dgn	
LAB10BR501	HP ECONOMIZER INLET DRAIN	25	1	80	DDD	900#	SA-106 GR.B	HP	127.3	122	1845	250	26	1	ABPR2-M-S-PD-0137	V17460-ICND-003-00.dgn	
LAB10BR502	HP ECONOMIZER INLET DRAIN	25	1	80	CDH	1500#	SA-106 GR.B	HP	127.3	323	1845	612	64	2.5	ABPR2-M-S-PD-0137	V17460-ICND-003-00.dgn	
LAB10BR504	HP ECONOMIZER INLET DRAIN	25	1	80	DDH	900#	SA-106 GR.B	HP	114.5	323	1660	612	64	2.5	ABPR2-M-S-PD-0137	V17460-ICND-003-00.dgn	
LAB10BR701	HP ATTEMP FW FLOW TRANSMITTER	20	0.75	80	DDD	900#	SA-106 GR.B	HP	127.3	122	1845	250	64	2.5	ABPR2-M-S-PD-0137	V17460-ICND-003-00.dgn	
LAB10BR702	HP ATTEMP FW FLOW TRANSMITTER	20	0.75	80	DDD	900#	SA-106 GR.B	HP	127.3	122	1845	250	64	2.5	ABPR2-M-S-PD-0137	V17460-ICND-003-00.dgn	
LAB10BR703	HP ECON INLET FEED PRESS IND	20	0.75	80	DDH	900#	SA-106 GR.B	HP	114.5	323	1660	612	64	2.5	ABPR2-M-S-PD-0137	V17460-ICND-003-00.dgn	
LAB10BR704	HP ECON INLET FEED PRESS TRANS	20	0.75	80	DDH	900#	SA-106 GR.B	HP	114.5	323	1660	612	64	2.5	ABPR2-M-S-PD-0137	V17460-ICND-003-00.dgn	
LAB24BR0010	DA TO HP PUMP NOZZLE	65	2.5	40	HDD	150#	SA-106 GR.B	DA	3.5	122	50	250	26	1	ABPR2-M-S-PD-0139	V17460-ICND-005-00.dgn	
LAB25BR0010	DA TO HP PUMP NOZZLE	65	2.5	40	HDD	150#	SA-106 GR.B	DA	3.5	122	50	250	26	1	ABPR2-M-S-PD-0139	V17460-ICND-005-00.dgn	
LAB26BR0010	DA TO HP PUMP NOZZLE	65	2.5	40	HDD	150#	SA-106 GR.B	DA	3.5	122	50	250	26	1	ABPR2-M-S-PD-0139	V17460-ICND-005-00.dgn	
LAB50BR001	LP FW INLET	80	3	40	GDD	300#	SA-106 GR.B	LP	29.4	122	425	250	26	1	ABPR2-M-S-PD-0138	V17460-ICND-004-00.dgn	
LAB50BR002	LP FW INLET	80	3	40	GDH	300#	SA-106 GR.B	LP	29.4	235	425	454	51	2	ABPR2-M-S-PD-0138	V17460-ICND-004-00.dgn	
LAB50BR401	LP FW INLET SAFETY VALVE	50	2	80	GDH	300#	SA-106 GR.B	LP	29.4	235	425	454	39	1.5	ABPR2-M-S-PD-0138	V17460-ICND-004-00.dgn	
LAB50BR501	LP FW INLET DRAIN	25	1	80	GDD	300#	SA-106 GR.B	LP	29.4	122	425	250	26	1	ABPR2-M-S-PD-0138	V17460-ICND-004-00.dgn	
LAB50BR502	LP FW INLET DRAIN	25	1	80	GDH	300#	SA-106 GR.B	LP	29.4	235	425	454	39	1.5	ABPR2-M-S-PD-0138	V17460-ICND-004-00.dgn	

Line_Tag	Service	Size (DN)	Size (NPS)	Schedule	Spec	ANSI_Class	Pipe_Matl	Sys	D_Press (Bar)	D_Temp (C)	D_Press (PSIG)	D_Temp (F)	Insul Thk (mm)	Insul Thk (in)	Customer's PID No.	VPI PID's No.	Notes
LAB50BR503	LP FW INLET DRAIN	25	1	80	GDH	300#	SA-106 GR.B	LP	29.4	235	425	454	39	1.5	ABPR2-M-S-PD-0138	V17460-ICND-004-00.dgn	
LAB50BR701	LP FW FLOW TRANSMITTER	20	0.75	80	GDD	300#	SA-106 GR.B	LP	29.4	122	425	250	26	1	ABPR2-M-S-PD-0138	V17460-ICND-004-00.dgn	
LAB50BR702	LP FW FLOW TRANSMITTER	20	0.75	80	GDD	300#	SA-106 GR.B	LP	29.4	122	425	250	26	1	ABPR2-M-S-PD-0138	V17460-ICND-004-00.dgn	
LAB50BR703	LP FW INLET PRESSURE GAUGE	20	0.75	80	GDH	300#	SA-106 GR.B	LP	29.4	235	425	454	39	1.5	ABPR2-M-S-PD-0138	V17460-ICND-004-00.dgn	
LAB50BR704	LP FW INLET PRESSURE TRANSMITTER	20	0.75	80	GDH	300#	SA-106 GR.B	LP	29.4	235	425	454	39	1.5	ABPR2-M-S-PD-0138	V17460-ICND-004-00.dgn	
LAB54BR0010	DA TO LP PUMP NOZZLE	40	1.5	80	HDD	150#	SA-106 GR.B	DA	3.5	122	50	250	26	1	ABPR2-M-S-PD-0139	V17460-ICND-005-00.dgn	
LAB55BR0010	DA TO LP PUMP NOZZLE	40	1.5	80	HDD	150#	SA-106 GR.B	DA	3.5	122	50	250	26	1	ABPR2-M-S-PD-0139	V17460-ICND-005-00.dgn	
LAB56BR0010	DA TO LP PUMP NOZZLE	40	1.5	80	HDD	150#	SA-106 GR.B	DA	3.5	122	50	250	26	1	ABPR2-M-S-PD-0139	V17460-ICND-005-00.dgn	
LAE10BR001	HP ATTEMP SPRAYWATER	50	2	80	DDD	900#	SA-106 GR.B	HP	127.3	122	1845	250	26	1	ABPR2-M-S-PD-0137	V17460-ICND-003-00.dgn	
LAE10BR002	HP ATTEMP SPRAYWATER	25	1	80	CBH	1500#	SA-335 P22	HP	89.7	500	1300	931	102	4	ABPR2-M-S-PD-0137	V17460-ICND-003-00.dgn	
LAE10BR501	HP ATTEMP SPRAY DRAIN	25	1	80	DDD	900#	SA-106 GR.B	HP	127.3	122	1845	250	26	1	ABPR2-M-S-PD-0137	V17460-ICND-003-00.dgn	
LAE10BR502	HP ATTEMP SPRAY STRAINER DRAIN	25	1	80	DDD	900#	SA-106 GR.B	HP	127.3	122	1845	250	26	1	ABPR2-M-S-PD-0137	V17460-ICND-003-00.dgn	
LAE10BR701	HP ATTEMP SPRAY FLOW TRANSMITTER	20	0.75	80	DDD	900#	SA-106 GR.B	HP	127.3	122	1845	250	26	1	ABPR2-M-S-PD-0137	V17460-ICND-003-00.dgn	
LAE10BR702	HP ATTEMP SPRAY FLOW TRANSMITTER	20	0.75	80	DDD	900#	SA-106 GR.B	HP	127.3	122	1845	250	26	1	ABPR2-M-S-PD-0137	V17460-ICND-003-00.dgn	
LAE10BR703	HP ATTEMP SPRAYWATER PRESS IND TRANSMITTER	20	0.75	80	DDD	900#	SA-106 GR.B	HP	127.3	122	1845	250	26	1	ABPR2-M-S-PD-0137	V17460-ICND-003-00.dgn	
LAE10BR704	HP ATTEMP SPRAYWATER STRAINER PRESS DIFF	20	0.75	80	DDD	900#	SA-106 GR.B	HP	127.3	122	1845	250	26	1	ABPR2-M-S-PD-0137	V17460-ICND-003-00.dgn	
LAE10BR705	HP ATTEMP SPRAYWATER STRAINER PRESS DIFF	20	0.75	80	DDD	900#	SA-106 GR.B	HP	127.3	122	1845	250	26	1	ABPR2-M-S-PD-0137	V17460-ICND-003-00.dgn	
LBG20BR005	LP STEAM TO DA (BY OTHERS)	150	6	40	HDD	150#	SA-106 GR.B	DA	11.1	256	160	492	51	2	ABPR2-M-S-PD-0139	V17460-ICND-005-00.dgn	
LBG20BR006	LP STEAM TO DA NOZZLE (BY OTHERS)	350	14	40	HDD	150#	SA-106 GR.B	DA	3.5	122	50	250	39	1.5	ABPR2-M-S-PD-0139	V17460-ICND-005-00.dgn	
LCA50BR020	CONDENSATE TO DA (BY OTHERS)	200	8	40	HDD	300#	SA-106 GR.B	DA	27.6	55	400	130	51	2	ABPR2-M-S-PD-0139	V17460-ICND-005-00.dgn	
LCA50BR030	CONDENSATE TO DA NOZZLE (BY OTHERS)	200	8	40	HDD	300#	SA-106 GR.B	DA	27.6	55	400	130	51	2	ABPR2-M-S-PD-0139	V17460-ICND-005-00.dgn	
LCA50BR510	CONDENSATE TO DA DRAIN (BY OTHERS)	25	1	80	HDD	300#	SA-106 GR.B	DA	27.6	55	400	130	39	1.5	ABPR2-M-S-PD-0139	V17460-ICND-005-00.dgn	
LCQ10BR001	HP BD COLLECTION HEADER	150	6	40	HDD	150#	SA-106 GR.B	BD	3.5	149	50	300	39	1.5	ABPR2-M-S-PD-0140	V17460-ICND-006-00.dgn	
LCQ10BR002	LP BD COLLECTION HEADER	150	6	40	HDD	150#	SA-106 GR.B	BD	3.5	149	50	300	39	1.5	ABPR2-M-S-PD-0140	V17460-ICND-006-00.dgn	
LCQ10BR003	HP BD COLLECTION HEADER	100	4	40	HDD	150#	SA-106 GR.B	BD	3.5	149	50	300	39	1.5	ABPR2-M-S-PD-0140	V17460-ICND-006-00.dgn	
LCQ10BR004	LP BD COLLECTION HEADER	80	3	40	HDD	150#	SA-106 GR.B	BD	3.5	149	50	300	26	1	ABPR2-M-S-PD-0140	V17460-ICND-006-00.dgn	
LCQ10BR005	BD TANK OVERFLOW	100	4	40	HDD	150#	SA-106 GR.B	BD	3.5	149	50	300	39	1.5	ABPR2-M-S-PD-0140	V17460-ICND-006-00.dgn	
LCQ10BR006	CUSTOMER SPARE	50	2	80	HDD	150#	SA-106 GR.B	BD	3.5	149	50	300	26	1	ABPR2-M-S-PD-0140	V17460-ICND-006-00.dgn	
LCQ10BR007	CUSTOMER SPARE	50	2	80	HDD	150#	SA-106 GR.B	BD	3.5	149	50	300	26	1	ABPR2-M-S-PD-0140	V17460-ICND-006-00.dgn	
LCQ10BR008	CUSTOMER SPARE	50	2	80	HDD	150#	SA-106 GR.B	BD	3.5	149	50	300	26	1	ABPR2-M-S-PD-0140	V17460-ICND-006-00.dgn	
LCQ10BR009	CUSTOMER SPARE	50	2	80	HDD	150#	SA-106 GR.B	BD	3.5	149	50	300	26	1	ABPR2-M-S-PD-0140	V17460-ICND-006-00.dgn	
LCQ10BR010	BD TANK VENT	200	8	40	HDD	150#	SA-106 GR.B	BD	3.5	149	50	300	39	1.5	ABPR2-M-S-PD-0140	V17460-ICND-006-00.dgn	
LCQ10BR501	BD TANK DRAIN	50	2	80	HDD	150#	SA-106 GR.B	BD	3.5	149	50	300	26	1	ABPR2-M-S-PD-0140	V17460-ICND-006-00.dgn	
LCQ10BR503	HP CONTINUOUS BLOWDOWN	100	4	40	GDD	300#	SA-106 GR.B	BD	41.4	253	600	486	51	2	ABPR2-M-S-PD-0140	V17460-ICND-006-00.dgn	
LCQ10BR504	LP CONTINUOUS BLOWDOWN	100	4	40	HDD	150#	SA-106 GR.B	BD	11.1	185	160	365	51	2	ABPR2-M-S-PD-0140	V17460-ICND-006-00.dgn	
LCQ10BR506	BD TANK COLLING WATER	50	2	80	HDD	150#	SA-106 GR.B	BD	3.5	149	50	300	26	1	ABPR2-M-S-PD-0140	V17460-ICND-006-00.dgn	
LCQ10BR701	BD TANK LEVEL GAUGE	40	1.5	80	HDD	150#	SA-106 GR.B	BD	3.5	149	50	300	26	1	ABPR2-M-S-PD-0140	V17460-ICND-006-00.dgn	
LCQ10BR702	BD TANK LEVEL GAUGE	40	1.5	80	HDD	150#	SA-106 GR.B	BD	3.5	149	50	300	26	1	ABPR2-M-S-PD-0140	V17460-ICND-006-00.dgn	
LCQ10BR703	BD TANK PRESSURE INDICATOR	20	0.75	80	HDD	150#	SA-106 GR.B	BD	3.5	149	50	300	26	1	ABPR2-M-S-PD-0140	V17460-ICND-006-00.dgn	
LCQ10BR704	BD TANK LEVEL GAUGE	40	1.5	80	HDD	150#	SA-106 GR.B	BD	3.5	149	50	300	26	1	ABPR2-M-S-PD-0140	V17460-ICND-006-00.dgn	
LCQ10BR705	BD TANK LEVEL GAUGE	40	1.5	80	HDD	150#	SA-106 GR.B	BD	3.5	149	50	300	26	1	ABPR2-M-S-PD-0140	V17460-ICND-006-00.dgn	
LCQ11BR501	HP FW INLET DRAIN	25	1	80	GDD	300#	SA-106 GR.B	BD	41.4	253	600	486	26	1	ABPR2-M-S-PD-0140	V17460-ICND-006-00.dgn	
LCQ11BR502	HP MODULE DRAINS	50	2	80	GDD	300#	SA-106 GR.B	BD	41.4	253	600	486	39	1.5	ABPR2-M-S-PD-0140	V17460-ICND-006-00.dgn	
LCQ11BR503	HP MODULE DRAINS	50	2	80	GDD	300#	SA-106 GR.B	BD	41.4	253	600	486	39	1.5	ABPR2-M-S-PD-0140	V17460-ICND-006-00.dgn	
LCQ11BR504	HP MODULE DRAINS	50	2	80	GDD	300#	SA-106 GR.B	BD	41.4	253	600	486	39	1.5	ABPR2-M-S-PD-0140	V17460-ICND-006-00.dgn	
LCQ11BR505	HP INTERMITTENT BLOWDOWN	50	2	80	EDD	600#	SA-106 GR.B	BD	62.1	278	900	532	39	1.5	ABPR2-M-S-PD-0140	V17460-ICND-006-00.dgn	
LCQ11BR506	HPSH X-OVER DRAIN	25	1	80	EDD	600#	SA-106 GR.B	BD	62.1	372	900	700	64	2.5	ABPR2-M-S-PD-0140	V17460-ICND-006-00.dgn	
LCQ11BR507	HP ATTEMP DRAIN POT DRAIN	25	1	80	ECD	600#	SA-335 P11	BD	62.1	455	900	850	102	4	ABPR2-M-S-PD-0140	V17460-ICND-006-00.dgn	
LCQ11BR508	HPSH OUTLET DRAIN POT DRAIN	25	1	80	ECD	600#	SA-335 P11	BD	41.4	483	600	900	102	4	ABPR2-M-S-PD-0140	V17460-ICND-006-00.dgn	
LCQ11BR511	BD TANK LEVEL GAUGE DRAIN	15	0.5	80	HDD	150#	SA-106 GR.B	BD	3.5	149	50	300	26	1	ABPR2-M-S-PD-0140	V17460-ICND-006-00.dgn	
LCQ11BR512	BD TANK LEVEL GAUGE DRAIN	15	0.5	80	HDD	150#	SA-106 GR.B	BD	3.5	149	50	300	26	1	ABPR2-M-S-PD-0140	V17460-ICND-006-00.dgn	
LCQ11BR514	BD TANK DRAIN TO OVERFLOW	50	2	80	HDD	150#	SA-106 GR.B	BD	3.5	149	50	300	26	1	ABPR2-M-S-PD-0140	V17460-ICND-006-00.dgn	
LCQ12BR501	LP FW INLET DRAIN	25	1	80	GDD	300#	SA-106 GR.B	BD	17.3	205	250	400	39	1.5	ABPR2-M-S-PD-0140	V17460-ICND-006-00.dgn	
LCQ12BR502	LP FW SRV DISCHARGE	80	3	40	GDD	300#	SA-106 GR.B	BD	17.3	205	250	400	39	1.5	ABPR2-M-S-PD-0140	V17460-ICND-006-00.dgn	
LCQ12BR503	LP ECON MODULE DRAINS	50	2	80	GDD	300#	SA-106 GR.B	BD	17.3	205	250	400	39	1.5	ABPR2-M-S-PD-0140	V17460-ICND-006-00.dgn	
LCQ12BR504	LP INTERMITTENT BLOWDOWN	50	2	80	GDD	300#	SA-106 GR.B	BD	17.3	205	250	400	39	1.5	ABPR2-M-S-PD-0140	V17460-ICND-006-00.dgn	
LCQ12BR505	LPSH OUTLET DRAIN POT DRAIN	25	1	80	HDD	150#	SA-106 GR.B	BD	13.8	205	200	400	39	1.5	ABPR2-M-S-PD-0140	V17460-ICND-006-00.dgn	
LCQ13BR501	LP FW SRV BODY DRAIN	15	0.5	80	HDX	150#	SA-106 GR.B	BD	6.9	177	100	350	0	0	ABPR2-M-S-PD-0140	V17460-ICND-006-00.dgn	

Vogt Power International, Inc. • 4000 Dupont Circle, Suite 400 • Louisville, Kentucky 40207

TERMINAL POINT LIST

For

SPP ABPR2 Amata City CCCP Project

For

Vogt Power International Job 17460

Amata B.Grimm Power (Rayong) 2 Limited

Vogt Power Document No. V17460-ICNA-002

Prepared by: **Bob Van Bogaert**
Senior Product Engineer

Reviewed by: **K. Hugle**
Project Engineer

Approved by: **M. Fisher**
Manager of Project Engineering

OWNER	Amata B. Grimm Power (Rayong) 2 Limited
PROJECT	**ABPR2 Combined Cycle Cogeneration Plant Project**
CONTRACTOR	Sumitomo Corporation
TITLE	**TERMINAL POINT LIST**
PROJECT CONTROL NO.	ABPR2-M-S-HA-1002 REV. 4

Rev.	Date	Engineer	Comments
0	5 July 2011	R. Van Bogaert	Original Issue
1	22-Sep-2011	R. Van Bogaert	Revise Client Title Block per Client comments.
2	8-Dec-2011	R. Van Bogaert	T-305 was Y = 4735 mm.
3	21-Feb-2012	R. Van Bogaert	Revisions per Client Comments & Corrected Doc. No. in footer
4	11-May-2012	Bill Lemos	Revisions per Client Comments

DEFINITIONS

Terminal Number - "T" is for terminal point, "T-XXX" is the terminal number where:

001-099 = HP System

101-199 = LP System

201-299 = Deaerator System

301-399 = BD Tank System

401-499 = HRSG

Line Number – Additional information for each Terminal Point is found on Vogt Power P&ID Drawings No. V17460-ICND-001 through 006, and sorted by Line Number.

Service - Describes the use or type of line, i.e., drain, vent, etc.

Line Size/ Schedule - Describes the nominal pipe size and schedule of the line used up to or at the terminal point. The actual terminal point may be a valve or pipe end.

Pipe Material - Describes the material at the terminal point, pipe materials are specified here. If the terminal point is a valve, the valve material shall be of a suitable material for interfacing with the specified pipe material.

Type of Connection - Denotes whether the terminal point is a butt-weld (BW), socket-weld (SW), flanged (FLGD), threaded (FNPT / MNPT), or a tube socket-weld (TSW) connection.

End Preparation – For BW connections the type of end preparation to prepare for welding shall be in accordance with drawing V17460-EBND-TBD.

Coordinates - The terminal coordinates are provided for all terminal points which interface with Balance of Plant Piping, by others. All dimensions are in inches.

The “XYZ” coordinates are defined as follows:

X distance perpendicular to the gas flow measured from the centerline of the HRSG. Positive number is in the direction of the right side of the HRSG (from CT to stack).

Y distance in the direction of gas flow, zero point is at the centerline of column line D. Positive number is in the direction of gas flow toward stack, negative is toward Combustion Turbine.

Z elevation above/below Vogt Reference Elevation of zero. Vogt Reference Elevation of zero corresponds to Top of Concrete / Bottom of Grout.

Vogt Power International
TERMINAL POINT LIST

Terminal Point Number	Line Number	Service	Line Size (DN)	Line Size (NPS)	Line Schedule	Line Material	ANSI Class	Conn Type	D_Press_Bar	D_Temp_C	D_Press_PSIG	D_Temp_F	Right +X (mm)	Gas Flow +Y (mm)	Vert. +Z (mm)	Right +X (in)	Gas Flow +Y (in)	Vert. +Z (in)	Notes
T-001	LAB10BR001	HP ECONOMIZER INLET	150	6	80	SA-106 GR.B	900#	BW	127.3	122	1845	250	-4318	8661	1524	-170.00	340.99	60.00	End bevel to match's TPSC's Sch. 120
T-002	HAH10BR009	HPSH OUTLET	200	8	160	SA-335 P22	1500#	BW	85.2	534	1235	992	-3480	-4420	1524	-137.00	-174.00	60.00	End bevel to match's TPSC's Sch. 140
T-003	LAB10BR501	HP ECONOMIZER INLET DRAIN	25	1	80	SA-106 GR.B	900#	SW	127.3	122	1845	250	-4623	8366	305	-182.00	329.37	12.00	
T-004	LAB10BR502	HP ECONOMIZER INLET DRAIN	25	1	80	SA-106 GR.B	1500#	SW	127.3	323	1845	612	-4623	10058	305	-182.00	396.00	12.00	
T-005	HAD10BR801	HP DRUM SAMPLE	20	0.75	80	SA-106 GR.B	900#	SW	92.4	307	1340	583	4318	1829	21488	170.00	72.00	846.00	
T-006	HAD10BR602	HP DRUM N2	25	1	80	SA-106 GR.B	900#	SW	89.7	304	1300	579	-1448	2438	23470	-57.00	96.00	924.00	
T-007	HAH10BR801	HP SAT STEAM SAMPLE	20	0.75	80	A-312 TP316H	900#	SW	89.7	304	1300	579	-330	1171	23218	-13.00	46.10	914.11	
T-008	HAD10BR503	HP DRUM WATER COLUMN DRAIN	20	0.75	80	SA-106 GR.B	900#	SW	92.4	307	1340	583	1219	-483	18898	48.00	-19.00	744.00	
T-010	HAH10BR504	HPSH OUTLET DRAIN	25	1	80	SA-335 P22	1500#	SW	85.2	534	1235	992	-3861	-4572	305	-152.00	-180.00	12.00	
T-011	LAE10BR001	HP ATTEMP SPRAYWATER	50	2	80	SA-106 GR.B	900#	SW	127.3	122	1845	250	-2985	228	21832	-117.51	8.99	859.54	End bevel to match's TPSC's Sch. 160
T-012	LAE10BR501	HP ATTEMP SPRAY DRAIN	25	1	80	SA-106 GR.B	900#	SW	127.3	122	1845	250	-914	-1213	21641	-36.00	-47.77	852.00	
T-014	HAC21BR801	CHEMICAL FEED	25	1	80	SA-106 GR.B	900#	SW	99	312	1435	592	1676	2946	22860	66.00	116.00	900.01	
T-015	HAC21BR802	CHEMICAL FEED	25	1	80	SA-106 GR.B	900#	SW	99	312	1435	592	TBD	TBD	TBD	TBD	TBD	TBD	
T-016	HAH10BR803	HPSH STEAM GLAND TAP	40	1.5	80	SA-335 P22	1500#	SW	85.2	534	1235	992	TBD	TBD	TBD	TBD	TBD	TBD	
T-101	LAB50BR001	LP FW INLET	80	3	40	SA-106 GR.B	300#	BW	29.4	122	425	250	-4318	7620	1524	-170.00	300.00	60.00	
T-102	HAH50BR004	LPSH MAIN STEAM	200	8	40	SA-106 GR.B	150#	BW	11.1	256	160	492	-3785	1702	1524	-149.00	67.00	60.00	
T-103	LAB50BR501	LP FW INLET DRAIN	25	1	80	SA-106 GR.B	300#	SW	29.4	122	425	250	-2032	7823	457	-80.00	308.00	18.00	End bevel to match's TPSC's Sch. 40
T-104	LAB50BR502	LP FW INLET DRAIN	25	1	80	SA-106 GR.B	300#	SW	29.4	235	425	454	-2032	8230	457	-80.00	324.00	18.00	End bevel to match's TPSC's Sch. 40
T-105	HAD50BR801	LP DRUM SAMPLE	20	0.75	80	SA-106 GR.B	150#	SW	15.2	203	220	396	2007	7366	21184	79.00	290.00	834.00	End bevel to match's TPSC's Sch. 40; 300 # CL
T-106	HAD50BR602	LP DRUM N2	25	1	80	SA-106 GR.B	150#	SW	11.1	194	160	380	-1372	6706	22936	-54.00	264.00	902.98	End bevel to match's TPSC's Sch. 40
T-107	HAH50BR801	LP SAT STEAM SAMPLE	20	0.75	80	A-312 TP316H	150#	SW	11.1	194	160	380	-413	5409	22905	-16.27	212.96	901.79	End bevel to match's TPSC's Sch. 40
T-108	HAD50BR503	LP WATER COLUMN DRAIN	20	0.75	80	SA-106 GR.B	150#	SW	15.2	203	220	396	1219	3962	19812	48.00	156.00	780.00	End bevel to match's TPSC's Sch. 40; 300 # CL
T-109	HAH50BR502	LPSH OUTLET DRAIN	25	1	80	SA-106 GR.B	150#	SW	11.1	256	160	492	-2134	3505	305	-84.00	138.00	12.00	End bevel to match's TPSC's Sch. 40
T-111	HAC50BR801	LP DRUM CHEMICAL FEED	25	1	80	SA-106 GR.B	300#	SW	19	213	275	415	1829	9220	21565	72.00	363.00	849.00	End bevel to match's TPSC's Sch. 40
T-112	LAA10BR001	LP ECON TO DA	80	3	40	SA-106 GR.B	300#	BW	19	213	275	415	-1876	9077	20879	-73.88	357.37	822.00	
T-201	LAA10BR007	DA TO HP PUMP NOZZLE	65	2.5	40	SA-106 GR.B	3000#	**SW**	3.5	122	50	250	Note : DA Systems T-201 - 224 coordinates by TPSC						End bevel to match's TPSC's Sch. 160
T-202	LAA10BR008	DA TO HP PUMP NOZZLE	65	2.5	40	SA-106 GR.B	3000#	**SW**	3.5	122	50	250							End bevel to match's TPSC's Sch. 160
T-203	LAA10BR009	DA TO HP PUMP NOZZLE	65	2.5	40	SA-106 GR.B	3000#	**SW**	3.5	122	50	250							End bevel to match's TPSC's Sch. 160
T-204	LAA10BR010	DA TO LP PUMP NOZZLE	40	1.5	80	SA-106 GR.B	3000#	**SW**	3.5	122	50	250							End bevel to match's TPSC's Sch. 40
T-205	LAA10BR011	DA TO LP PUMP NOZZLE	40	1.5	80	SA-106 GR.B	3000#	**SW**	3.5	122	50	250							End bevel to match's TPSC's Sch. 40
T-206	LAA10BR012	DA TO LP PUMP NOZZLE	40	1.5	80	SA-106 GR.B	3000#	**SW**	3.5	122	50	250							End bevel to match's TPSC's Sch. 40
T-208	LAA10BR014	CONDENSATE TO DA NOZZLE	200	8	40	SA-106 GR.B	150#	BW	3.5	122	50	250							
T-209	LAA10BR703	DA LEVEL GAUGE NOZZLE	40	1.5	80	SA-106 GR.B	3000#	**SW**	3.5	122	50	250							
T-210	LAA10BR704	DA LEVEL GAUGE NOZZLE	40	1.5	80	SA-106 GR.B	3000#	**SW**	3.5	122	50	250							
T-211	LAA10BR705	DA LEVEL TRANSMITTER NOZZLE	25	1	80	SA-106 GR.B	3000#	**SW**	3.5	122	50	250							
T-212	LAA10BR706	DA LEVEL TRANSMITTER NOZZLE	25	1	80	SA-106 GR.B	3000#	**SW**	3.5	122	50	250							
T-213	LAA10BR901	DA SAFETY VALVE INLET NOZZLE	100	4	40	SA-106 GR.B	150#	FLGD	3.5	122	50	250							
T-214	LAA10BR602	DA N2 FILL NOZZLE	25	1	80	SA-106 GR.B	150#	SW	3.5	122	50	250							End bevel to match's TPSC's Sch. 40
T-215	LAA10BR707	DA PRESSURE INDICATOR NOZZLE	20	0.75	80	SA-106 GR.B	3000#	**SW**	3.5	122	50	250							
T-216	LAA11BR002	CONDENSATE TO DA NOZZLE	200	8	40	SA-106 GR.B	150#	BW	18.3	55	265	130							Design Pressure allows for approx 16m of head loss (1.56bar)
T-217	LAA10BR601	DA VENT (BY OTHERS)	80	3	40	SA-106 GR.B	150#	FLGD	3.5	122	50	250							
T-218	LAA10BR006	LP STEAM TO DA NOZZLE	350	14	40	SA-106 GR.B	150#	BW	3.5	122	50	250							
~~T-219~~	~~LAA10BR801~~	~~DA CHEMICAL FEED NOZZLE~~	~~25~~	~~1~~	~~80~~	~~SA-106 GR.B~~	~~150#~~	~~FLGD~~	~~3.5~~	~~122~~	~~50~~	~~250~~							~~End bevel to match's TPSC's Sch. 40~~
T-220	LAA10BR016	LP ECON TO DA (BY OTHERS)	200	8	40	SA-106 GR.B	150#	BW	3.5	122	50	250							
T-221	LAA10BR709	DA LEVEL TRANSMITTER NOZZLE	25	1	80	SA-106 GR.B	3000#	**SW**	3.5	122	50	250							
T-222	LAA10BR710	DA LEVEL TRANSMITTER NOZZLE	25	1	80	SA-106 GR.B	3000#	**SW**	3.5	122	50	250							
~~T-223~~	~~LAA10BR711~~	~~DA LEVEL TRANSMITTER NOZZLE~~	~~25~~	~~1~~	~~80~~	~~SA-106 GR.B~~	~~150#~~	~~SW~~	~~3.5~~	~~122~~	~~50~~	~~250~~							
~~T-224~~	~~LAA10BR712~~	~~DA LEVEL TRANSMITTER NOZZLE~~	~~25~~	~~1~~	~~80~~	~~SA-106 GR.B~~	~~150#~~	~~SW~~	~~3.5~~	~~122~~	~~50~~	~~250~~							
T-301	LCQ11BR511	BD TANK LEVEL GAUGE DRAIN	15	0.5	80	SA-106 GR.B	150#	SW	3.5	149	50	300	6283	6251	-1705	247.35	246.09	-67.12	End bevel to match's TPSC's Sch. 40
T-302	LCQ10BR501	BD TANK DRAIN	50	2	80	SA-106 GR.B	150#	SW	3.5	149	50	300	4623	4470	-1995	182.00	176.00	-78.56	End bevel to match's TPSC's Sch. 40
T-303	LCQ10BR506	BD TANK COLLING WATER	50	2	80	SA-106 GR.B	150#	SW	3.5	149	50	300	6715	6706	-1995	264.35	264.00	-78.56	End bevel to match's TPSC's 1.5" NPS Sch. 40 (reducer)
T-305	LCQ10BR005	BD TANK OVERFLOW	100	4	40	SA-106 GR.B	150#	BW	3.5	149	50	300	6153	5604	-1995	242.23	220.63	-78.56	
T-306	LCQ11BR512	BD TANK LEVEL GAUGE DRAIN	15	0.5	80	SA-106 GR.B	150#	SW	3.5	149	50	300	6054	6251	-1705	238.35	246.09	-67.12	
T-401	HNE10BR501	STACK DRAIN	80	3	40	A-312 TP304	150#	BW	3.5	177	50	350	0	16711	305	0.00	657.91	12.00	

Vogt Power International, Inc. • 4000 Dupont Circle, Suite 400 • Louisville, Kentucky 40207

VALVE LIST

For

SPP ABPR2 Amata City CCCP Project

For

Vogt Power International Job 17460

Amata B.Grimm Power (Rayong) 2 Limited

Vogt Power Document No. V17460-ICNA-003

Prepared by: **Bob Van Bogaert**
Senior Product Engineer

Reviewed by: **K. Hugle**
Project Engineer

Approved by: **M. Fisher**
Manager of Project Engineering

OWNER	Amata B. Grimm Power (Rayong) 2 Limited
PROJECT	**ABPR2 Combined Cycle Cogeneration Plant Project**
CONTRACTOR	Sumitomo Corporation
TITLE	**HRSG VALVE LIST**
PROJECT CONTROL NO.	ABPR2-K-S-HA-1003 REV. 4

Rev.	Date	Engineer	Comments
0	29 June 2011	R. Van Bogaert	Original Issue
1	22-Sep-2011	R. Van Bogaert	Revise Client Title Block per Client comments.
2	21-Feb-2012	R. Van Bogaert	Correct Doc. No. in Footer & HPSH to Steam Turbine Gland Seal Isolation Valves
3	11-May-2011	Bill Lemos	Changed per Client comments.
4	13-Feb-2013	Tom Fabiani	Updates for final valve vendor information

1.0. DESCRIPTION OF VALVE DESIGNATIONS

Note: Valve List is sorted by Line Number, and correlates to P&ID V17460-ICND-002 through 006

1.1 Manual Valve Tag Number

All tags are to be preceded with unit number “21” or “22” to represent the two units respectively, and “02” for the deaerator system.

AAA = SYSTEM ID

GMO = Injection System For Main Fluid
HAC = Economizer System
HAD = Drum / Evaporator System
HAH = Superheater System
HAN = Pressure System Drainage and Venting
HNA = Ductwork System (Exhaust Gas Side of HRSG)
HNB = Bypass Damper
HNE = HRSG Exhaust Stack
LAA = Deaerator
LAB = Feedwater
LAC = Feedwater Pumps & Heat Exchanger
LAE = Attemperator (Desuperheater)
LBA = Main Steam Piping
LBG = Auxiliary Steam Piping
LBH = Blowdown Tank
LCA = Main Condensate Piping
LCQ = Blowdown System
PGA = Cooling Water System

BB = SUB SYSTEM ID

10 = HP System
20 = HP System
30 = Not Used
40 = Not Used
50 = LP System

CC = ITEM TYPE CODE

AA = Valves
AC = Attemperator
AT = Strainer / Separator
AP = Pumps
BB = Drum / Condensate Pots
BR = Lines
BS = Silencers
BU = Burner
CF = Flow Devices

CL = Level Devices
CG = Position Measurement
CP = Pressure Devices
CQ = Quality Variables
CT = Temperature Devices
CY = Vibration Devices

DDD = ITEM NUMBERING

"AA" Piping
001-099 = Valves, General
101-199 = Motor Valves
201-299 = Valves w/ Pneumatic & Magnetic Actuators
301-399 = Hydraulic Valves
401-499 = Spring Operated Valves (Safety Valves)
501-599 = Drain Valves
601-699 = Vent Valves
701-799 = Impulse Line Valves
801-899 = Sampling & Dosing Valves
901-999 = Expansion Joint, Bellows, & Trap

X = Pressure Class Identifier

A = 4500#
B = 2500#
C = 1500#
D = 900#
E = 600#
G = 300#
H = 150#
X = No Class Required (Non Pressure Part)

Y = Material Type Identifier

A = SA-335 P-91
B = SA-335 P-22
C = SA-335 P-11
D = SA-106 Grade B
E = SA-106 Grade C
G = A-312 Type 316 SS
H = A-312 Type 316H SS
J = A-312 Type 304 SS
K = A-312 Type 304H SS

Z = Code Class Identifier

K = ASME Section I (Section I Jurisdiction/Tech - Boiler Proper)
H = ASME Section I (includes Section I Jurisdiction/ASME B31.1 Tech. - Boiler External Piping)
D = ASME B31.1
M = ASME Section VIII
T = ASME B31.3
X = Non-Code/Non Pressure Retaining

1.2 Size

Size is Nominal Pipe Size in inches (NPS). Valves 2½" and larger are large-bore. Valves 2" and smaller are small-bore.

Large bore valves are typically butt-welded into the piping system. Code requires the valve end schedule to match the piping schedule. All pipe schedules are given in the Line List.

Small-bore valves are typically socket-welded and pipe schedule is not required.

1.3 ANSI Class

Based on ASME B16.34 for design conditions as given in the Line List, but may be Special or Limited Class as designated by valve vendor.

1.4 Valve Material

Chemical composition generally should match piping material, but may have a safe end or other method to avoid forcing erection contractor to make dissimilar welds in the field. The material information in this list gives ASTM material specifications for valves, which reflect their fabrication by forging or casting, and are different from ASTM piping material specifications.

1.5 Manufacturer, Model

Will be furnished once vendors are selected and drawings are received.

1.6 Operator Type

Valves are manually operated unless noted. "Check" valves have no means of operation. "Stop-check" valves combine a manual stop function and a check function.

1.7 Fail Position

Fail position (Open, Closed, or In-Place) is noted for all motor and air-operated valves.

Vogt Power International
HRSG VALVE LIST

Valve_Tag	Line_Tag	Service	Sys	Valve_Size (DN)	Valve_Size (NPS)	Ansi_Class	Customer's Valve Abbr.	Type	Valve_Matl	Customer's Oper. Abbr.	Oper_Type	Connection Type	Manuf	Model_No	D_Press_Bar	D_Temp_C	D_Press_PSIG	D_Temp_F	Customer's PID No.	VPI PID's No.	Notes
HAC20AA501	HAC20BR501	HPEC DRAIN	HP	25	1	1500#	GV	GLOBE	SA-105	H	MANUAL	SW	Velan	W05-3074B-02TY	99	312	1435	592	ABPR2-M-S-PD-0137	V17460-ICND-003-00.dgn	
HAC20AA502	HAC20BR502	HPEC DRAIN	HP	25	1	1500#	GV	GLOBE	SA-105	H	MANUAL	SW	Velan	W05-3074B-02TY	99	312	1435	592	ABPR2-M-S-PD-0137	V17460-ICND-003-00.dgn	
HAC20AA503	HAC20BR503	HPEC DRAIN	HP	25	1	1500#	GV	GLOBE	SA-105	H	MANUAL	SW	Velan	W05-3074B-02TY	99	312	1435	592	ABPR2-M-S-PD-0137	V17460-ICND-003-00.dgn	
HAC20AA504	HAC20BR504	HPEC DRAIN	HP	25	1	1500#	GV	GLOBE	SA-105	H	MANUAL	SW	Velan	W05-3074B-02TY	99	312	1435	592	ABPR2-M-S-PD-0137	V17460-ICND-003-00.dgn	
HAC20AA505	HAC20BR505	HPEC DRAIN	HP	25	1	1500#	GV	GLOBE	SA-105	H	MANUAL	SW	Velan	W05-3074B-02TY	99	312	1435	592	ABPR2-M-S-PD-0137	V17460-ICND-003-00.dgn	
HAC20AA506	HAC20BR506	HPEC DRAIN	HP	25	1	1500#	GV	GLOBE	SA-105	H	MANUAL	SW	Velan	W05-3074B-02TY	99	312	1435	592	ABPR2-M-S-PD-0137	V17460-ICND-003-00.dgn	
HAC20AA507	HAC20BR507	HPEC DRAIN	HP	25	1	1500#	GV	GLOBE	SA-105	H	MANUAL	SW	Velan	W05-3074B-02TY	99	312	1435	592	ABPR2-M-S-PD-0137	V17460-ICND-003-00.dgn	
HAC20AA508	HAC20BR508	HPEC DRAIN	HP	25	1	1500#	GV	GLOBE	SA-105	H	MANUAL	SW	Velan	W05-3074B-02TY	99	312	1435	592	ABPR2-M-S-PD-0137	V17460-ICND-003-00.dgn	
HAC20AA509	HAC20BR509	HPEC DRAIN	HP	25	1	1500#	GV	GLOBE	SA-105	H	MANUAL	SW	Velan	W05-3074B-02TY	99	312	1435	592	ABPR2-M-S-PD-0137	V17460-ICND-003-00.dgn	
HAC20AA510	HAC20BR510	HPEC DRAIN	HP	25	1	1500#	GV	GLOBE	SA-105	H	MANUAL	SW	Velan	W05-3074B-02TY	99	312	1435	592	ABPR2-M-S-PD-0137	V17460-ICND-003-00.dgn	
HAC20AA511	HAC20BR511	HPEC DRAIN	HP	25	1	1500#	GV	GLOBE	SA-105	H	MANUAL	SW	Velan	W05-3074B-02TY	99	312	1435	592	ABPR2-M-S-PD-0137	V17460-ICND-003-00.dgn	
HAC20AA512	HAC20BR512	HPEC DRAIN	HP	25	1	1500#	GV	GLOBE	SA-105	H	MANUAL	SW	Velan	W05-3074B-02TY	99	312	1435	592	ABPR2-M-S-PD-0137	V17460-ICND-003-00.dgn	
HAC20AA513	HAC20BR513	HPEC DRAIN	HP	25	1	1500#	GV	GLOBE	SA-105	H	MANUAL	SW	Velan	W05-3074B-02TY	99	312	1435	592	ABPR2-M-S-PD-0137	V17460-ICND-003-00.dgn	
HAC20AA514	HAC20BR514	HPEC DRAIN COLLECTION	HP	50	2	1500#	GV	GLOBE	SA-105	H	MANUAL	SW	Velan	W08-3074B-02TY	99	312	1435	592	ABPR2-M-S-PD-0137	V17460-ICND-003-00.dgn	
HAC20AA515	HAC20BR515	HPEC DRAIN COLLECTION	HP	50	2	1500#	GV	GLOBE	SA-105	H	MANUAL	SW	Velan	W08-3074B-02TY	99	312	1435	592	ABPR2-M-S-PD-0137	V17460-ICND-003-00.dgn	
HAC20AA516	HAC20BR516	HPEC DRAIN COLLECTION	HP	50	2	1500#	GV	GLOBE	SA-105	H	MANUAL	SW	Velan	W08-3074B-02TY	99	312	1435	592	ABPR2-M-S-PD-0137	V17460-ICND-003-00.dgn	
HAC20AA601	HAC20BR601	HPEC 1 VENT	HP	25	1	1500#	GV	GLOBE	SA-105	H	MANUAL	SW	Velan	W05-3074B-02TS	99	312	1435	592	ABPR2-M-S-PD-0137	V17460-ICND-003-00.dgn	
HAC20AA602	HAC20BR602	HPEC 2 VENT	HP	25	1	1500#	GV	GLOBE	SA-105	H	MANUAL	SW	Velan	W05-3074B-02TS	99	312	1435	592	ABPR2-M-S-PD-0137	V17460-ICND-003-00.dgn	
HAC20AA603	HAC20BR603	HPEC 3 VENT	HP	25	1	1500#	GV	GLOBE	SA-105	H	MANUAL	SW	Velan	W05-3074B-02TS	99	312	1435	592	ABPR2-M-S-PD-0137	V17460-ICND-003-00.dgn	
HAC20AA604	HAC20BR604	HPEC 4 VENT	HP	25	1	1500#	GV	GLOBE	SA-105	H	MANUAL	SW	Velan	W05-3074B-02TS	99	312	1435	592	ABPR2-M-S-PD-0137	V17460-ICND-003-00.dgn	
HAC20AA605	HAC20BR605	HPEC 4 VENT	HP	25	1	1500#	GV	GLOBE	SA-105	H	MANUAL	SW	Velan	W05-3074B-02TS	99	312	1435	592	ABPR2-M-S-PD-0137	V17460-ICND-003-00.dgn	
HAC20AA606	HAC20BR606	HPEC 6 VENT	HP	25	1	1500#	GV	GLOBE	SA-105	H	MANUAL	SW	Velan	W05-3074B-02TS	99	312	1435	592	ABPR2-M-S-PD-0137	V17460-ICND-003-00.dgn	
HAC20AA607	HAC20BR607	HPEC 7 VENT	HP	25	1	1500#	GV	GLOBE	SA-105	H	MANUAL	SW	Velan	W05-3074B-02TS	99	312	1435	592	ABPR2-M-S-PD-0137	V17460-ICND-003-00.dgn	
HAC20AA608	HAC20BR608	HPEC 8 VENT	HP	25	1	1500#	GV	GLOBE	SA-105	H	MANUAL	SW	Velan	W05-3074B-02TS	99	312	1435	592	ABPR2-M-S-PD-0137	V17460-ICND-003-00.dgn	
HAC20AA609	HAC20BR609	HPEC 9 VENT	HP	25	1	1500#	GV	GLOBE	SA-105	H	MANUAL	SW	Velan	W05-3074B-02TS	99	312	1435	592	ABPR2-M-S-PD-0137	V17460-ICND-003-00.dgn	
HAC20AA610	HAC20BR610	HPEC A VENT	HP	25	1	1500#	GV	GLOBE	SA-105	H	MANUAL	SW	Velan	W05-3074B-02TS	99	312	1435	592	ABPR2-M-S-PD-0137	V17460-ICND-003-00.dgn	
HAC20AA611	HAC20BR611	HPEC B VENT	HP	25	1	1500#	GV	GLOBE	SA-105	H	MANUAL	SW	Velan	W05-3074B-02TS	99	312	1435	592	ABPR2-M-S-PD-0137	V17460-ICND-003-00.dgn	
HAC20AA612	HAC20BR612	HPEC C VENT	HP	25	1	1500#	GV	GLOBE	SA-105	H	MANUAL	SW	Velan	W05-3074B-02TS	99	312	1435	592	ABPR2-M-S-PD-0137	V17460-ICND-003-00.dgn	
HAC20AA613	HAC20BR613	HPEC D VENT	HP	25	1	1500#	GV	GLOBE	SA-105	H	MANUAL	SW	Velan	W05-3074B-02TS	99	312	1435	592	ABPR2-M-S-PD-0137	V17460-ICND-003-00.dgn	
HAC20AA101	HAC20BR614	HPEC MODULE VENT HEADER	HP	50	2	1690#	YG	GLOBE	SA-105	MO	MOTOR	SW	Velan	W08-8076Z-02TS-M	99	312	1435	592	ABPR2-M-S-PD-0137	V17460-ICND-003-00.dgn	
HAC21AA801	HAC21BR801	HP CHEMICAL FEED	HP	25	1	1500#	GV	GLOBE	SA-105	H	MANUAL	SW	Velan	W05-3074B-02TY	99	312	1435	592	ABPR2-M-S-PD-0137	V17460-ICND-003-00.dgn	
HAC21AA802	HAC21BR801	HP CHEMICAL FEED	HP	25	1	1500#		STOPCHECK	SA-105	H	MANUAL	SW	Velan	W05-3084B-02TY	99	312	1435	592	ABPR2-M-S-PD-0137	V17460-ICND-003-00.dgn	
HAC50AA201	HAC50BR002	**LP DRUM LEVEL CONTROL VALVE**	LP	40	1.5	300#	DV	CNTRL	A216 WCB	AM	DIAPHRAGM	SW	Flowserve Valtek	262899.004	29.4	235	425	454	ABPR2-M-S-PD-0138	V17460-ICND-004-00.dgn	
HAC50AA001	HAC50BR004	LP ECON TO DA	DA	80	3	300#	WG	GATE	A216 WCB	H	MANUAL	BW	Tyco	6000C-3CGA03W01F5	29.4	235	425	454	ABPR2-M-S-PD-0139	V17460-ICND-004-00.dgn	
HAC50AA501	HAC50BR501	LP ECON MODULE DRAIN	LP	25	1	800#	GV	GLOBE	SA-105	H	MANUAL	SW	Velan	W05-2074B-02TY	29.4	235	425	454	ABPR2-M-S-PD-0138	V17460-ICND-004-00.dgn	
HAC50AA502	HAC50BR502	LP ECON MODULE DRAIN	LP	25	1	800#	GV	GLOBE	SA-105	H	MANUAL	SW	Velan	W05-2074B-02TY	29.4	235	425	454	ABPR2-M-S-PD-0138	V17460-ICND-004-00.dgn	
HAC50AA503	HAC50BR503	LP ECON MODULE DRAIN	LP	25	1	800#	GV	GLOBE	SA-105	H	MANUAL	SW	Velan	W05-2074B-02TY	29.4	235	425	454	ABPR2-M-S-PD-0138	V17460-ICND-004-00.dgn	
HAC50AA504	HAC50BR504	LP ECON MODULE DRAIN	LP	25	1	800#	GV	GLOBE	SA-105	H	MANUAL	SW	Velan	W05-2074B-02TY	29.4	235	425	454	ABPR2-M-S-PD-0138	V17460-ICND-004-00.dgn	
HAC50AA505	HAC50BR505	LP ECON MODULE DRAIN COLLECTION	LP	50	2	800#	GV	GLOBE	SA-105	H	MANUAL	SW	Velan	W08-2074B-02TS	29.4	235	425	454	ABPR2-M-S-PD-0138	V17460-ICND-004-00.dgn	
HAC50AA601	HAC50BR601	LP ECON MODULE VENT	LP	25	1	1690#	YG	GLOBE	SA-105	H	MANUAL	SW	Velan	W05-8076Z-02TS	29.4	235	425	454	ABPR2-M-S-PD-0138	V17460-ICND-004-00.dgn	
HAC50AA602	HAC50BR602	LP ECON MODULE VENT	LP	25	1	1690#	YG	GLOBE	SA-105	H	MANUAL	SW	Velan	W05-8076Z-02TS	29.4	235	425	454	ABPR2-M-S-PD-0138	V17460-ICND-004-00.dgn	
HAC50AA603	HAC50BR603	LP ECON MODULE VENT	LP	25	1	1690#	YG	GLOBE	SA-105	H	MANUAL	SW	Velan	W05-8076Z-02TS	29.4	235	425	454	ABPR2-M-S-PD-0138	V17460-ICND-004-00.dgn	
HAC50AA604	HAC50BR604	LP ECON MODULE VENT	LP	25	1	1690#	YG	GLOBE	SA-105	H	MANUAL	SW	Velan	W05-8076Z-02TS	29.4	235	425	454	ABPR2-M-S-PD-0138	V17460-ICND-004-00.dgn	
HAC50AA101	HAC50BR605	LP ECON MODULE VENT COLLECTION	LP	50	2	1690#	YG	GLOBE	SA-105	MO	MOTOR	SW	Velan	W08-8076Z-02TS-M	29.4	235	425	454	ABPR2-M-S-PD-0138	V17460-ICND-004-00.dgn	
HAC50AA801	HAC50BR801	LP DRUM CHEMICAL FEED	LP	25	1	800#		STOPCHECK	SA-105	H	MANUAL	SW	Velan	W05-2084B-02TY	19	213	275	415	ABPR2-M-S-PD-0138	V17460-ICND-004-00.dgn	
HAC50AA802	HAC50BR801	LP DRUM CHEMICAL FEED	LP	25	1	800#	GV	GLOBE	SA-105	H	MANUAL	SW	Velan	W05-2074B-02TY	19	213	275	415	ABPR2-M-S-PD-0138	V17460-ICND-004-00.dgn	
HAD10AA201	HAD10BR501	HP CONTINUOUS BLOWDOWN	HP	50	2	900#	A	ANGLE	A216 WCB	AM	DIAPHRAGM	SW	Flowserve Valtek	262899.005	92.4	307	1340	583	ABPR2-M-S-PD-0137	V17460-ICND-003-00.dgn	
HAD10AA501	HAD10BR501	HP CONTINUOUS BLOWDOWN (ISOLATION)	HP	50	2	1690#	YG	GLOBE	SA-105	H	MANUAL	SW	Velan	W08-8076Z-02TS	92.4	307	1340	583	ABPR2-M-S-PD-0137	V17460-ICND-003-00.dgn	
HAD10AA504	HAD10BR502	HP DRUM LEVEL GAUGE DRAIN	HP	15	0.5	1500#	GV	GLOBE	SA-105	H	MANUAL	SW	Velan	W03-3074B-02TS	92.4	307	1340	583	ABPR2-M-S-PD-0137	V17460-ICND-003-00.dgn	
HAD10AA502	HAD10BR503	HP DRUM WATER COLUMN DRAIN	HP	20	0.75	1500#	GV	GLOBE	SA-105	H	MANUAL	SW	Velan	W04-3074B-02TS	92.4	307	1340	583	ABPR2-M-S-PD-0137	V17460-ICND-003-00.dgn	
HAD10AA503	HAD10BR503	HP DRUM WATER COLUMN DRAIN	HP	20	0.75	1500#	GV	GLOBE	SA-105	H	MANUAL	SW	Velan	W04-3074B-02TS	92.4	307	1340	583	ABPR2-M-S-PD-0137	V17460-ICND-003-00.dgn	
HAD10AA102	HAD10BR504	HP INTERMITTENT BD	HP	50	2	1500#	GV	GLOBE	SA-105	MO	MOTOR	SW	Velan	W08-3216B-02TS-M	108	307	1565	583	ABPR2-M-S-PD-0137	V17460-ICND-003-00.dgn	
HAD10AA505	HAD10BR504	HP INTERMITTENT BD	HP	50	2	1500#	GV	GLOBE	SA-105	H	MANUAL	SW	Velan	W08-3216B-02TS	108	307	1565	583	ABPR2-M-S-PD-0137	V17460-ICND-003-00.dgn	
HAD10AA101	HAD10BR601	HP DRUM VENT	HP	25	1	1690#	YG	GLOBE	SA-105	MO	MOTOR	SW	Velan	W05-8076Z-02TS-M	89.7	304	1300	579	ABPR2-M-S-PD-0137	V17460-ICND-003-00.dgn	
HAD10AA601	HAD10BR601	HP DRUM VENT	HP	25	1	1500#	GV	GLOBE	SA-105	H	MANUAL	SW	Velan	W05-3074B-02TS	89.7	304	1300	579	ABPR2-M-S-PD-0137	V17460-ICND-003-00.dgn	
HAD10AA602	HAD10BR602	HP DRUM N2	HP	25	1	1500#		STOPCHECK	SA-105	H	MANUAL	SW	Velan	W05-3084B-02TY	89.7	304	1300	579	ABPR2-M-S-PD-0137	V17460-ICND-003-00.dgn	
HAD10AA701	HAD10BR701	HP DRUM LEVEL TRANSMITTER	HP	25	1	1500#	WG	GATE	SA-105	H	MANUAL	SW	Velan	W05-3054B-02TY	92.4	307	1340	583	ABPR2-M-S-PD-0137	V17460-ICND-003-00.dgn	
HAD10AA702	HAD10BR701	HP DRUM LEVEL TRANSMITTER	HP	25	1	1500#	WG	GATE	SA-105	H	MANUAL	SW	Velan	W05-3054B-02TY	92.4	307	1340	583	ABPR2-M-S-PD-0137	V17460-ICND-003-00.dgn	
HAD10AA703	HAD10BR702	HP DRUM LEVEL TRANSMITTER	HP	25	1	1500#	WG	GATE	SA-105	H	MANUAL	SW	Velan	W05-3054B-02TY	92.4	307	1340	583	ABPR2-M-S-PD-0137	V17460-ICND-003-00.dgn	
HAD10AA704	HAD10BR702	HP DRUM LEVEL TRANSMITTER	HP	25	1	1500#	WG	GATE	SA-105	H	MANUAL	SW	Velan	W05-3054B-02TY	92.4	307	1340	583	ABPR2-M-S-PD-0137	V17460-ICND-003-00.dgn	
HAD10AA705	HAD10BR703	HP DRUM LEVEL TRANSMITTER	HP	25	1	1500#	WG	GATE	SA-105	H	MANUAL	SW	Velan	W05-3054B-02TY	92.4	307	1340	583	ABPR2-M-S-PD-0137	V17460-ICND-003-00.dgn	
HAD10AA706	HAD10BR703	HP DRUM LEVEL TRANSMITTER	HP	25	1	1500#	WG	GATE	SA-105	H	MANUAL	SW	Velan	W05-3054B-02TY	92.4	307	1340	583	ABPR2-M-S-PD-0137	V17460-ICND-003-00.dgn	
HAD10AA707	HAD10BR704	HP DRUM LEVEL TRANSMITTER	HP	25	1	1500#	WG	GATE	SA-105	H	MANUAL	SW	Velan	W05-3054B-02TY	92.4	307	1340	583	ABPR2-M-S-PD-0137	V17460-ICND-003-00.dgn	
HAD10AA708	HAD10BR704	HP DRUM LEVEL TRANSMITTER	HP	25	1	1500#	WG	GATE	SA-105	H	MANUAL	SW	Velan	W05-3054B-02TY	92.4	307	1340	583	ABPR2-M-S-PD-0137	V17460-ICND-003-00.dgn	
HAD10AA709	HAD10BR705	HP DRUM LEVEL GAUGE	HP	40	1.5	1500#	WG	GATE	SA-105	H	MANUAL	SW	Velan	W07-3054B-02TY	92.4	307	1340	583	ABPR2-M-S-PD-0137	V17460-ICND-003-00.dgn	
HAD10AA710	HAD10BR705	HP DRUM LEVEL GAUGE	HP	40	1.5	1500#	WG	GATE	SA-105	H	MANUAL	SW	Velan	W07-3054B-02TY	92.4	307	1340	583	ABPR2-M-S-PD-0137	V17460-ICND-003-00.dgn	
HAD10AA711	HAD10BR706	HP DRUM LEVEL GAUGE	HP	40	1.5	1500#	WG	GATE	SA-105	H	MANUAL	SW	Velan	W07-3054B-02TY	92.4	307	1340	583	ABPR2-M-S-PD-0137	V17460-ICND-003-00.dgn	
HAD10AA712	HAD10BR706	HP DRUM LEVEL GAUGE	HP	40	1.5	1500#	WG	GATE	SA-105	H	MANUAL	SW	Velan	W07-3054B-02TY	92.4	307	1340	583	ABPR2-M-S-PD-0137	V17460-ICND-003-00.dgn	
HAD10AA713	HAD10BR709	HP DRUM PRESSURE TRANSMITTER	HP	20	0.75	1500#	GV	GLOBE	SA-105	H	MANUAL	SW	Velan	W04-3074B-02TY	89.7	304	1300	579	ABPR2-M-S-PD-0137	V17460-ICND-003-00.dgn	
HAD10AA714	HAD10BR709	HP DRUM PRESSURE TRANSMITTER	HP	20	0.75	1500#	GV	GLOBE	SA-105	H	MANUAL	SW	Velan	W04-3074B-02TY	89.7	304	1300	579	ABPR2-M-S-PD-0137	V17460-ICND-003-00.dgn	
HAD10AA715	HAD10BR710	HP DRUM PRESSURE TRANSMITTER	HP	20	0.75	1500#	GV	GLOBE	SA-105	H	MANUAL	SW	Velan	W04-3074B-02TY	89.7	304	1300	579	ABPR2-M-S-PD-0137	V17460-ICND-003-00.dgn	
HAD10AA716	HAD10BR710	HP DRUM PRESSURE TRANSMITTER	HP	20	0.75	1500#	GV	GLOBE	SA-105	H	MANUAL	SW	Velan	W04-3074B-02TY	89.7	304	1300	579	ABPR2-M-S-PD-0137	V17460-ICND-003-00.dgn	
HAD10AA718	HAD10BR711	HP DRUM PRESSURE INDICATOR	HP	20	0.75	1500#	GV	GLOBE	SA-105	H	MANUAL	SW	Velan	W04-3074B-02TY	89.7	304	1300	579	ABPR2-M-S-PD-0137	V17460-ICND-003-00.dgn	
HAD10AA719	HAD10BR711	HP DRUM PRESSURE INDICATOR	HP	20	0.75	1500#	GV	GLOBE	SA-105	H	MANUAL	SW	Velan	W04-3074B-02TY	89.7	304	1300	579	ABPR2-M-S-PD-0137	V17460-ICND-003-00.dgn	
HAD10AA720	HAD10BR712	HP DRUM PRESSURE INDICATOR TEST	HP	15	0.5	2500#	GV	GLOBE	SA-105	H	MANUAL	SW	PGI INT'L	PV-508SSG	89.7	304	1300	579	ABPR2-M-S-PD-0137	V17460-ICND-003-00.dgn	
HAD10AA721	HAD10BR713	HP DRUM LEVEL TRANSMITTER	HP	25	1	1500#	WG	GATE	SA-105	H	MANUAL	SW	Velan	W05-3054B-02TY	92.4	307	1340	583	ABPR2-M-S-PD-0137	V17460-ICND-003-00.dgn	
HAD10AA722	HAD10BR713	HP DRUM LEVEL TRANSMITTER	HP	25	1	1500#	WG	GATE	SA-105	H	MANUAL	SW	Velan	W05-3054B-02TY	92.4	307	1340	583	ABPR2-M-S-PD-0137	V17460-ICND-003-00.dgn	
HAD10AA723	HAD10BR714	HP DRUM LEVEL TRANSMITTER	HP	25	1	1500#	WG	GATE	SA-105	H	MANUAL	SW	Velan	W05-3054B-02TY	92.4	307	1340	583	ABPR2-M-S-PD-0137	V17460-ICND-003-00.dgn	
HAD10AA724	HAD10BR714	HP DRUM LEVEL TRANSMITTER	HP	25	1	1500#	WG	GATE	SA-105	H	MANUAL	SW	Velan	W05-3054B-02TY	92.4	307	1340	583	ABPR2-M-S-PD-0137	V17460-ICND-003-00.dgn	
HAD10AA801	HAD10BR801	HP DRUM SAMPLE	HP	20	0.75	1500#	GV	GLOBE	SA-105	H	MANUAL	SW	Velan	W04-3074B-02TS	92.4	307	1340	583	ABPR2-M-S-PD-0137	V17460-ICND-003-00.dgn	
HAD10AA802	HAD10BR801	HP DRUM SAMPLE	HP	20	0.75	1500#	GV	GLOBE	SA-105	H	MANUAL	SW	Velan	W04-3074B-02TS	89.7	304	1300	579	ABPR2-M-S-PD-0137	V17460-ICND-003-00.dgn	
HAD10AA401	HAD10BR901	HP DRUM SAFETY VALVE #1	HP	65	2.5	1500#	SV	SAFETY VALVE (ANGLE)	A216 WCC	SR	SELF REG.	BW	Dresser	2-1/2-2737WB-3-100F3-WSC	89.7	304	1300	579	ABPR2-M-S-PD-0137	V17460-ICND-003-00.dgn	
HAD50AA201	HAD50BR501	LP CONTINUOUS BLOWDOWN	LP	50	2	300#	A	ANGLE	A216 WCB	AM	DIAPHRAGM	SW	Flowserve Valtek	262899.006	15.2	203	220	396	ABPR2-M-S-PD-0138	V17460-ICND-004-00.dgn	
HAD50AA501	HAD50BR501	LP CONTINUOUS BD (ISOLATION)	LP	50	2	800#	GV	GLOBE	SA-105	H	MANUAL	SW	Velan	W08-2074B-02TS	15.2	203	220	396	ABPR2-M-S-PD-0138	V17460-ICND-004-00.dgn	
HAD50AA504	HAD50BR502	LP LEVEL GAUGE DRAIN	LP	15	0.5	800#	GV	GLOBE	SA-105	H	MANUAL	SW	Velan	W03-2074B-02TS	15.2	203	220	396	ABPR2-M-S-PD-0138	V17460-ICND-004-00.dgn	
HAD50AA502	HAD50BR503	LP WATER COLUMN DRAIN	LP	20	0.75	800#	GV	GLOBE	SA-105	H	MANUAL	SW	Velan	W04-2074B-02TS	15.2	203	220	396	ABPR2-M-S-PD-0138	V17460-ICND-004-00.dgn	
HAD50AA503	HAD50BR503	LP WATER COLUMN DRAIN	LP	20	0.75	800#	GV	GLOBE	SA-105	H	MANUAL	SW	Velan	W04-2074B-02TS	15.2	203	220	396	ABPR2-M-S-PD-0138	V17460-ICND-004-00.dgn	
HAD50AA102	HAD50BR504	LP INTERMITTENT BD	LP	50	2	1500#	GV	GLOBE	SA-105	MO	MOTOR	SW	Velan	W08-3216B-02TS-M	19	203	275	396	ABPR2-M-S-PD-0138	V17460-ICND-004-00.dgn	
HAD50AA505	HAD50BR504	LP INTERMITTENT BD	LP	50	2	800#	GV	GLOBE	SA-105	H	MANUAL	SW	Velan	W08-2216B-02TS	15.2	203	220	396	ABPR2-M-S-PD-0138	V17460-ICND-004-00.dgn	
HAD50AA101	HAD50BR601	LP DRUM VENT	LP	25	1	1690#	YG	GLOBE	SA-105	MO	MOTOR	SW	Velan	W05-8076Z-02TS-M	12.5	194	180	380	ABPR2-M-S-PD-0138	V17460-ICND-004-00.dgn	
HAD50AA601	HAD50BR601	LP DRUM VENT	LP	25	1	1690#	YG	GLOBE	SA-105	H	MANUAL	SW	Velan	W05-8076Z-02TS	12.5	194	180	380	ABPR2-M-S-PD-0138	V17460-ICND-004-00.dgn	
HAD50AA602	HAD50BR602	LP DRUM N2	LP	25	1	800#		STOPCHECK	SA-105	H	MANUAL	SW	Velan	W05-2084B-02TY	12.5	194	180	380	ABPR2-M-S-PD-0138	V17460-ICND-004-00.dgn	
HAD50AA701	HAD50BR701	LP DRUM LEVEL TRANSMITTER	LP	25	1	800#	WG	GATE	SA-105	H	MANUAL	SW	Velan	W05-2054B-02TY	15.2	203	220	396	ABPR2-M-S-PD-0138	V17460-ICND-004-00.dgn	
HAD50AA702	HAD50BR702	LP DRUM LEVEL TRANSMITTER	LP	25	1	800#	WG	GATE	SA-105	H	MANUAL	SW	Velan	W05-2054B-02TY	15.2	203	220	396	ABPR2-M-S-PD-0138	V17460-ICND-004-00.dgn	
HAD50AA703	HAD50BR703	LP DRUM LEVEL TRANSMITTER	LP	25	1	800#	WG	GATE	SA-105	H	MANUAL	SW	Velan	W05-2054B-02TY	15.2	203	220	396	ABPR2-M-S-PD-0138	V17460-ICND-004-00.dgn	
HAD50AA704	HAD50BR704	LP DRUM LEVEL TRANSMITTER	LP	25	1	800#	GV	GLOBE	SA-105	H	MANUAL	SW	Velan	W05-2054B-02TY	15.2	203	220	396	ABPR2-M-S-PD-0138	V17460-ICND-004-00.dgn	
HAD50AA705	HAD50BR705	LP DRUM LEVEL GAUGE	LP	40	1.5	800#	WG	GATE	SA-105	H	MANUAL	SW	Velan	W07-2054B-02TY	15.2	203	220	396	ABPR2-M-S-PD-0138	V17460-ICND-004-00.dgn	

Valve_Tag	Line_Tag	Service	Sys	Valve_Size (DN)	Valve_Size (NPS)	Ansi_Class	Customer's Valve Abbr.	Type	Valve_Matl	Customer's Oper. Abbr.	Oper_Type	Connection Type	Manuf	Model_No	D_Press_Bar	D_Temp_C	D_Press_PSIG	D_Temp_F	Customer's PID No.	VPI PID's No.	Notes
HAD50AA706	HAD50BR706	LP DRUM LEVEL GAUGE	LP	40	1.5	800#	WG	GATE	SA-105	H	MANUAL	SW	Velan	W07-2054B-02TY	15.2	203	220	396	ABPR2-M-S-PD-0138	V17460-ICND-004-00.dgn	
HAD50AA708	HAD50BR708	LP DRUM PRESSURE TRANSMITTER	LP	20	0.75	800#	GV	GLOBE	SA-105	H	MANUAL	SW	Velan	W04-2074B-02TY	12.5	194	180	380	ABPR2-M-S-PD-0138	V17460-ICND-004-00.dgn	
HAD50AA710	HAD50BR709	LP DRUM PRESSURE TRANSMITTER	LP	20	0.75	800#	GV	GLOBE	SA-105	H	MANUAL	SW	Velan	W04-2074B-02TY	12.5	194	180	380	ABPR2-M-S-PD-0138	V17460-ICND-004-00.dgn	
HAD50AA712	HAD50BR710	LP DRUM PRESSURE GAUGE	LP	20	0.75	800#	GV	GLOBE	SA-105	H	MANUAL	SW	Velan	W04-2074B-02TY	12.5	194	180	380	ABPR2-M-S-PD-0138	V17460-ICND-004-00.dgn	
HAD50AA714	HAD50BR711	LP DRUM PRESSURE TEST	LP	15	0.5	2500#	GV	GLOBE	SA-105	H	MANUAL	SW	PGI INT'L	PV-508SSG	11.1	194	160	380	ABPR2-M-S-PD-0138	V17460-ICND-004-00.dgn	
HAD50AA709	HAD50BR712	LP DRUM LEVEL TRANSMITTER	LP	25	1	800#	WG	GATE	SA-105	H	MANUAL	SW	Velan	W05-2054B-02TY	15.2	203	220	396	ABPR2-M-S-PD-0138	V17460-ICND-004-00.dgn	
HAD50AA711	HAD50BR713	LP DRUM LEVEL TRANSMITTER	LP	25	1	800#	WG	GATE	SA-105	H	MANUAL	SW	Velan	W05-2054B-02TY	15.2	203	220	396	ABPR2-M-S-PD-0138	V17460-ICND-004-00.dgn	
HAD50AA801	HAD50BR801	LP DRUM SAMPLE	LP	20	0.75	800#	GV	GLOBE	SA-105	H	MANUAL	SW	Velan	W04-2074B-02TS	15.2	203	220	396	ABPR2-M-S-PD-0138	V17460-ICND-004-00.dgn	
HAD50AA802	HAD50BR801	LP DRUM SAMPLE	LP	20	0.75	800#	GV	GLOBE	SA-105	H	MANUAL	SW	Velan	W04-2074B-02TS	15.2	203	220	396	ABPR2-M-S-PD-0138	V17460-ICND-004-00.dgn	
HAD50AA401	HAD50BR901	LP DRUM SAFETY VALVE #1	LP	40	1.5	300#	SV	SAFETY VALVE (ANGLE)	A216 WCC	SR	SELF REG.	FLG	Dresser	1811JB-0-3X1-22WSC	12.5	194	180	380	ABPR2-M-S-PD-0138	V17460-ICND-004-00.dgn	
HAD50AA402	HAD50BR902	LP DRUM SAFETY VALVE #2	LP	40	1.5	300#	SV	SAFETY VALVE (ANGLE)	A216 WCC	SR	SELF REG.	FLG	Dresser	1811JB-0-3X1-22WSC	12.5	194	180	380	ABPR2-M-S-PD-0138	V17460-ICND-004-00.dgn	
HAH10AC001	HAH10BR004	HPSH ATTEMP.	HP	250	10	1500#		SPRAY	SA-182 F22			BW	Tyco: Narvik	N110323/US	89.7	500	1300	931	ABPR2-M-S-PD-0137	V17460-ICND-003-00.dgn	
HAH10AA001	HAH10BR008	HPSH MAIN STEAM NON-RETURN VALVE	HP	200	8	1500#		STOPCHECK	A217 WC9	H	MANUAL	BW	Tyco	70033644/400	85.2	534	1235	992	ABPR2-M-S-PD-0137	V17460-ICND-003-00.dgn	
HAH10AA002	HAH10BR008	HPSH MAIN STEAM STOP VALVE	HP	200	8	1500#	WG	GATE	A217 WC9	H	MANUAL	BW	Tyco	70033644/500	85.2	534	1235	992	ABPR2-M-S-PD-0137	V17460-ICND-003-00.dgn	
HAH10AA202	HAH10BR501	HPSH #3 - #2 XOVER DRAIN	HP	25	1	900#	BA	BALL	SA-182 F11	AO (Pneumatic-On-Off)	CYLINDER	SW	SST Valve	1022000F-F11-SD-005	105.2	406	1525	762	ABPR2-M-S-PD-0137	V17460-ICND-003-00.dgn	
HAH10AA501	HAH10BR501	HPSH #3 - #2 XOVER DRAIN	HP	25	1	900#	BA	BALL	SA-182 F11	H	MANUAL	SW	SST Valve	1022000F-F11-SD-010	105.2	406	1525	762	ABPR2-M-S-PD-0137	V17460-ICND-003-00.dgn	
HAH10AA203	HAH10BR502	HPSH ATTEMP. DRAIN POT DRAIN	HP	25	1	1500#	BA	BALL	SA-182 F22	AO (Pneumatic-On-Off)	CYLINDER	SW	SST Valve	1000000F-F22-SD-005	105.2	500	1525	931	ABPR2-M-S-PD-0137	V17460-ICND-003-00.dgn	
HAH10AA502	HAH10BR502	HPSH ATTEMP. DRAIN POT DRAIN	HP	25	1	1500#	BA	BALL	SA-182 F22	H	MANUAL	SW	SST Valve	1000000F-F22-SD-010	105.2	500	1525	931	ABPR2-M-S-PD-0137	V17460-ICND-003-00.dgn	
HAH10AA204	HAH10BR503	HPSH OUTLET DRAIN	HP	25	1	2500#	BA	BALL	SA-182 F22	AO (Pneumatic-On-Off)	CYLINDER	SW	SST Valve	1000000F-F22-SD-006	100.7	534	1460	992	ABPR2-M-S-PD-0137	V17460-ICND-003-00.dgn	
HAH10AA503	HAH10BR503	HPSH OUTLET DRAIN	HP	25	1	2500#	BA	BALL	SA-182 F22	H	MANUAL	SW	SST Valve	1000000F-F22-SD-011	100.7	534	1460	992	ABPR2-M-S-PD-0137	V17460-ICND-003-00.dgn	
HAH10AA506	HAH10BR503	HPSH OUTLET DRAIN	HP	25	1	2500#		STOPCHECK	SA-182 F22	H	MANUAL	SW	Velan	W05-8086Z-06TS	100.7	534	1460	992	ABPR2-M-S-PD-0137	V17460-ICND-003-00.dgn	
HAH10AA504	HAH10BR504	HPSH OUTLET DRAIN	HP	25	1	1500#	GV	GLOBE	SA-182 F22	H	MANUAL	SW	Velan	W05-3074B-06TS	85.2	534	1235	992	ABPR2-M-S-PD-0137	V17460-ICND-003-00.dgn	
HAH10AA505	HAH10BR504	HPSH OUTLET DRAIN	HP	25	1	1500#	GV	GLOBE	SA-182 F22	H	MANUAL	SW	Velan	W05-3074B-06TS	85.2	534	1235	992	ABPR2-M-S-PD-0137	V17460-ICND-003-00.dgn	
HAH10AA103	HAH10BR603	HPSH START UP VENT ISOLATION	HP	150	6	1500#	WG	GATE	A217 WC9	MO	MOTOR	BW	Tyco	70033644/600	85.2	534	1235	992	ABPR2-M-S-PD-0137	V17460-ICND-003-00.dgn	
HAH10AA201	HAH10BR603	HPSH START UP VENT CONTROL VALVE	HP	150	6	1500#	DV	CNTRL	A217 WC9	AM	DIAPHRAGM	BW	Flowserve Valtek	262899.001	85.2	534	1235	992	ABPR2-M-S-PD-0137	V17460-ICND-003-00.dgn	
HAH10AA701	HAH10BR701	HP ATTEMP. PRESS IND TRANSMITTER	HP	20	0.75	1500#	GV	GLOBE	SA-182 F22	H	MANUAL	SW	Velan	W04-3074B-06TS	89.7	500	1300	931	ABPR2-M-S-PD-0137	V17460-ICND-003-00.dgn	
HAH10AA702	HAH10BR701	HP ATTEMP. PRESS IND TRANSMITTER	HP	20	0.75	1500#	GV	GLOBE	SA-182 F22	H	MANUAL	SW	Velan	W04-3074B-06TS	89.7	500	1300	931	ABPR2-M-S-PD-0137	V17460-ICND-003-00.dgn	
HAH10AA703	HAH10BR702	HPSH OUTLET PRESS IND	HP	20	0.75	1500#	GV	GLOBE	SA-182 F22	H	MANUAL	SW	Velan	W04-3074B-06TS	85.2	534	1235	992	ABPR2-M-S-PD-0137	V17460-ICND-003-00.dgn	
HAH10AA704	HAH10BR702	HPSH OUTLET PRESS IND	HP	20	0.75	1500#	GV	GLOBE	SA-182 F22	H	MANUAL	SW	Velan	W04-3074B-06TS	85.2	534	1235	992	ABPR2-M-S-PD-0137	V17460-ICND-003-00.dgn	
HAH10AA705	HAH10BR703	HPSH OUTLET PRESS TRANS	HP	20	0.75	1500#	GV	GLOBE	SA-182 F22	H	MANUAL	SW	Velan	W04-3074B-06TS	85.2	534	1235	992	ABPR2-M-S-PD-0137	V17460-ICND-003-00.dgn	
HAH10AA801	HAH10BR801	HP SAT STEAM SAMPLE	HP	8	0.25	2500#	N	NEEDLE	A-312 TP316H	H	MANUAL	SW	Jonas: Swagelok	SS-3NRSW4T-G-W20	89.7	304	1300	579	ABPR2-M-S-PD-0137	V17460-ICND-003-00.dgn	
HAH10AA802	HAH10BR801	HP SAT STEAM SAMPLE	HP	8	0.25	2500#	N	NEEDLE	A-312 TP316H	H	MANUAL	SW	Jonas: Swagelok	SS-3NRSW4T-G-W20	89.7	304	1300	579	ABPR2-M-S-PD-0137	V17460-ICND-003-00.dgn	
HAH10AA803	HAH10BR803	HPSH TO STEAM TURBINE GLAND SEAL	HP	40	1.5	1500#		STOPCHECK	SA-182 F22	H	MANUAL	SW			85.2	534	1235	992	ABPR2-M-S-PD-0137	V17460-ICND-003-00.dgn	
HAH10AA804	HAH10BR803	HPSH TO STEAM TURBINE GLAND SEAL	HP	40	1.5	1500#	GV	GLOBE	SA-182 F22	H	MANUAL	SW	Velan	W07-3074W-06TS	85.2	534	1235	992	ABPR2-M-S-PD-0137	V17460-ICND-003-00.dgn	
HAH10AA401	HAH10BR901	HPSH SAFETY VALVE	HP	50	2	1500#	SV	SAFETY VALVE (ANGLE)	A217 WC9	SR	SELF REG.	BW	Dresser	2-1725WE-5-S-500-F3-WS	85.2	534	1235	992	ABPR2-M-S-PD-0137	V17460-ICND-003-00.dgn	
HAS0AA001	HAS0BR003	LPSH MAIN STEAM NON-RETURN VALVE	LP	200	8	150#		STOPCHECK	A216 WCB	H	MANUAL	BW	Tyco	6000C-8CGL01W01F5	11.1	256	160	492	ABPR2-M-S-PD-0138	V17460-ICND-004-00.dgn	
HAS0AA002	HAS0BR003	LPSH MAIN STEAM STOP VALVE	LP	200	8	150#	WG	GATE	A216 WCB	H	MANUAL	BW	Tyco	6000C-8CGA01W01F5	11.1	256	160	492	ABPR2-M-S-PD-0138	V17460-ICND-004-00.dgn	
HAS0AA202	HAS0BR501	LPSH OUTLET DRAIN	LP	25	1	300#	BA	BALL	SA-105	AO (Pneumatic-On-Off)	CYLINDER	SW	SST Valve	1022000F-105-SD-005	13.8	256	200	492	ABPR2-M-S-PD-0138	V17460-ICND-004-00.dgn	
HAS0AA501	HAS0BR501	LPSH OUTLET DRAIN	LP	25	1	300#	BA	BALL	SA-105	H	MANUAL	SW	SST Valve	1022000F-105-SD-010	13.8	256	200	492	ABPR2-M-S-PD-0138	V17460-ICND-004-00.dgn	
HAS0AA502	HAS0BR502	LPSH OUTLET DRAIN	LP	25	1	1690#	YG	GLOBE	SA-105	H	MANUAL	SW	Velan	W05-8076Z-02TS	11.1	256	160	492	ABPR2-M-S-PD-0138	V17460-ICND-004-00.dgn	
HAS0AA504	HAS0BR503	LPSH OUTLET DRAIN	LP	25	1	800#		STOPCHECK	SA-105	H	MANUAL	SW	Velan	W05-2084B-02TY	13.8	256	200	492	ABPR2-M-S-PD-0138	V17460-ICND-004-00.dgn	
HAS0AA103	HAS0BR602	LPSH START UP VENT ISOLATION	LP	100	4	150#	WG	GATE	A216 WCB	MO	MOTOR	BW	Tyco	6000C-4CGA01W01F5	11.1	256	160	492	ABPR2-M-S-PD-0138	V17460-ICND-004-00.dgn	
HAS0AA201	HAS0BR602	LPSH START UP VENT CONTROL VALVE	LP	100	4	150#	DV	CNTRL	A216 WCB	AM	DIAPHRAGM	BW	Flowserve Valtek	262899.002	11.1	256	160	492	ABPR2-M-S-PD-0138	V17460-ICND-004-00.dgn	
HAS0AA701	HAS0BR701	LPSH OUTLET PRESSURE GAUGE	LP	20	0.75	800#	GV	GLOBE	SA-105	H	MANUAL	SW	Velan	W04-2074B-02TY	11.1	256	160	492	ABPR2-M-S-PD-0138	V17460-ICND-004-00.dgn	
HAS0AA703	HAS0BR702	LPSH OUTLET PRESSURE TRANSMITTER	LP	20	0.75	800#	GV	GLOBE	SA-105	H	MANUAL	SW	Velan	W04-2074B-02TY	11.1	256	160	492	ABPR2-M-S-PD-0138	V17460-ICND-004-00.dgn	
HAS0AA401	HAS0BR901	LPSH SAFETY VALVE	LP	40	1.5	300#	SV	SAFETY VALVE (ANGLE)	A216 WCC	SR	SELF REG.	FLG	Dresser	1811HB-0-3X1-22-WSC	11.1	256	160	492	ABPR2-M-S-PD-0138	V17460-ICND-004-00.dgn	
HNB10AA701	HNB10BR701	TRANSITION DUCT PRESS TRANSMITTER	XX	25	1	800#	GV	GLOBE	Sa-182 F304	H	MANUAL	SW	Velan	W05-2074B-13MY	0.7	316	10	600	ABPR2-M-S-PD-0136	V17460-ICND-002-00.dgn	
HNB10AA702	HNB10BR702	TRANSITION DUCT PRESS TRANSMITTER	XX	25	1	800#	GV	GLOBE	Sa-182 F304	H	MANUAL	SW	Velan	W05-2074B-13MY	0.7	316	10	600	ABPR2-M-S-PD-0136	V17460-ICND-002-00.dgn	
HNB10AA703	HNB10BR703	TRANSITION DUCT PRESS TRANSMITTER	XX	25	1	800#	GV	GLOBE	Sa-182 F304	H	MANUAL	SW	Velan	W05-2074B-13MY	0.7	316	10	600	ABPR2-M-S-PD-0136	V17460-ICND-002-00.dgn	
HNB10AA704	HNB10BR704	TRANSITION DUCT PRESS TRANSMITTER	XX	25	1	800#	GV	GLOBE	Sa-182 F304	H	MANUAL	SW	Velan	W05-2074B-13MY	0.7	316	10	600	ABPR2-M-S-PD-0136	V17460-ICND-002-00.dgn	
~~HNE10AA501~~	~~HNE10BR501~~	~~STACK DRAIN~~	~~XX~~	~~80~~	~~3~~	~~150#~~	~~WG~~	~~GATE~~	~~Sa-182 F304~~	~~H~~	~~MANUAL~~	~~BW~~	~~Tyco~~	~~6000C-3CGAF06F12~~	~~1.1~~	~~177~~	~~15~~	~~350~~	~~ABPR2-M-S-PD-0136~~	~~V17460-ICND-002-00.dgn~~	DELETED
LAA10AA002	LAA10BR002	LP ECON TO DA	DA	80	3	300#	SC	SWING CHECK	A216 WCB			BW	Tyco	6000C-3CSC03W01F5	29.4	235	425	454	ABPR2-M-S-PD-0139	V17460-ICND-005-00.dgn	
LAA10AA201	LAA10BR002	LP ECON TO DA CONTROL VALVE	DA	80	3	300#	DV	CNTRL	A217 WC9	AM	DIAPHRAGM	BW	Flowserve Valtek	262899.009	19	213	275	415	ABPR2-M-S-PD-0139	V17460-ICND-005-00.dgn	WITH A-106 B SAFE END
LAA10AA004	LAA10BR015	LP ECON TO DA	DA	200	8	300#	WG	GATE	A216 WCB	H	MANUAL	BW	Tyco	6000C-8CGA03W01F5	29.4	235	425	454	ABPR2-M-S-PD-0139	V17460-ICND-005-00.dgn	
LAA10AA501	LAA10BR501	LP ECON TO DA DRAIN	DA	25	1	800#	GV	GLOBE	SA-105	H	MANUAL	SW	Velan	W05-2074B-02TY	19	213	275	415	ABPR2-M-S-PD-0139	V17460-ICND-005-00.dgn	
LAA10AA505	LAA10BR505	DA LEVEL GAUGE DRAIN	DA	15	0.5	800#	GV	GLOBE	SA-105	H	MANUAL	SW	Velan	W03-2074B-02TS	3.5	122	50	250	ABPR2-M-S-PD-0139	V17460-ICND-005-00.dgn	
LAA10AA102	LAA10BR601	DA VENT	DA	80	3	150#	GV	GLOBE	A216 WCB	MO	MOTOR	BW	Tyco	6000C-3CGL01W01F5	3.5	122	50	250	ABPR2-M-S-PD-0139	V17460-ICND-005-00.dgn	
LAA10AA602	LAA10BR602	DA N2 FILL NOZZLE	DA	25	1	800#	GV	GLOBE	SA-105	H	MANUAL	SW	Velan	W05-2074B-02TY	3.5	122	50	250	ABPR2-M-S-PD-0139	V17460-ICND-005-00.dgn	
LAA10AA603	LAA10BR602	DA N2 FILL NOZZLE	DA	25	1	800#		STOPCHECK	SA-105	H	MANUAL	SW	Velan	W05-2084B-02TY	3.5	122	50	250	ABPR2-M-S-PD-0139	V17460-ICND-005-00.dgn	
LAA10AA701	LAA10BR701	LP ECON FLOW TRANMITTER	DA	20	0.75	800#	GV	GLOBE	SA-105	H	MANUAL	SW	Velan	W04-2074B-02TY	19	213	275	415	ABPR2-M-S-PD-0139	V17460-ICND-005-00.dgn	
LAA10AA703	LAA10BR703	DA LEVEL GAUGE NOZZLE	DA	40	1.5	800#	WG	GATE	SA-105	H	MANUAL	SW	Velan	W07-2054B-02TY	3.5	122	50	250	ABPR2-M-S-PD-0139	V17460-ICND-005-00.dgn	
LAA10AA704	LAA10BR704	DA LEVEL GAUGE NOZZLE	DA	40	1.5	800#	WG	GATE	SA-105	H	MANUAL	SW	Velan	W07-2054B-02TY	3.5	122	50	250	ABPR2-M-S-PD-0139	V17460-ICND-005-00.dgn	
LAA10AA705	LAA10BR705	DA LEVEL TRANSMITTER	DA	25	1	800#	WG	GATE	SA-105	H	MANUAL	SW	Velan	W05-2054B-02TY	3.5	122	50	250	ABPR2-M-S-PD-0139	V17460-ICND-005-00.dgn	
LAA10AA706	LAA10BR706	DA LEVEL TRANSMITTER NOZZLE	DA	25	1	800#	WG	GATE	SA-105	H	MANUAL	SW	Velan	W05-2054B-02TY	3.5	122	50	250	ABPR2-M-S-PD-0139	V17460-ICND-005-00.dgn	
LAA10AA707	LAA10BR707	DA PRESSURE INDICATOR NOZZLE	DA	20	0.75	800#	GV	GLOBE	SA-105	H	MANUAL	SW	Velan	W04-2074B-02TY	3.5	122	50	250	ABPR2-M-S-PD-0139	V17460-ICND-005-00.dgn	
LAA10AA708	LAA10BR708	DA PRESSURE TRANSMITTER	DA	20	0.75	800#	GV	GLOBE	SA-105	H	MANUAL	SW	Velan	W04-2074B-02TY	3.5	122	50	250	ABPR2-M-S-PD-0139	V17460-ICND-005-00.dgn	
LAA10AA709	LAA10BR709	DA LEVEL TRANSMITTER	DA	25	1	800#	WG	GATE	SA-105	H	MANUAL	SW	Velan	W05-2054B-02TY	3.5	122	50	250	ABPR2-M-S-PD-0139	V17460-ICND-005-00.dgn	
LAA10AA710	LAA10BR710	DA LEVEL TRANSMITTER	DA	25	1	800#	WG	GATE	SA-105	H	MANUAL	SW	Velan	W05-2054B-02TY	3.5	122	50	250	ABPR2-M-S-PD-0139	V17460-ICND-005-00.dgn	
~~LAA10AA711~~	~~LAA10BR711~~	~~DA LEVEL TRANSMITTER~~	~~DA~~	~~25~~	~~1~~	~~800#~~	~~WG~~	~~GATE~~	~~SA-105~~	~~H~~	~~MANUAL~~	~~SW~~	~~Velan~~	~~W05-2054B-02TY~~	~~3.5~~	~~122~~	~~50~~	~~250~~	~~ABPR2-M-S-PD-0139~~	~~V17460-ICND-005-00.dgn~~	DELETED
~~LAA10AA712~~	~~LAA10BR712~~	~~DA LEVEL TRANSMITTER~~	~~DA~~	~~25~~	~~1~~	~~800#~~	~~WG~~	~~GATE~~	~~SA-105~~	~~H~~	~~MANUAL~~	~~SW~~	~~Velan~~	~~W05-2054B-02TY~~	~~3.5~~	~~122~~	~~50~~	~~250~~	~~ABPR2-M-S-PD-0139~~	~~V17460-ICND-005-00.dgn~~	DELETED
~~LAA10AA801~~	~~LAA10BR801~~	~~DA CHEMICAL FEED NOZZLE~~	~~DA~~	~~25~~	~~1~~	~~800#~~	~~GV~~	~~GLOBE~~	~~SA-105~~	~~H~~	~~MANUAL~~	~~SW~~	~~Velan~~	~~W05-2074B-02TY~~	~~3.5~~	~~122~~	~~50~~	~~250~~	~~ABPR2-M-S-PD-0139~~	~~V17460-ICND-005-00.dgn~~	DELETED
~~LAA10AA802~~	~~LAA10BR801~~	~~DA CHEMICAL FEED NOZZLE~~	~~DA~~	~~25~~	~~1~~	~~800#~~		~~STOPCHECK~~	~~SA-105~~	~~H~~	~~MANUAL~~	~~SW~~	~~Velan~~	~~W05-2084B-02TY~~	~~3.5~~	~~122~~	~~50~~	~~250~~	~~ABPR2-M-S-PD-0139~~	~~V17460-ICND-005-00.dgn~~	DELETED
LAA10AA401	LAA10BR901	DA SAFETY VALVE INLET	DA	150	6	600#	SV	SAFETY VALVE (ANGLE)	A217 WC6	SR	SELF REG.	FLG	Dresser	6"-2775QB-2-X1-F1-WSC	3.5	122	50	250	ABPR2-M-S-PD-0139	V17460-ICND-005-00.dgn	
LAA10AA702	LAA11BR702	LP ECON FLOW TRANMITTER	DA	20	0.75	800#	GV	GLOBE	SA-105	H	MANUAL	SW	Velan	W04-2074B-02TY	0	-18	0	0	ABPR2-M-S-PD-0139	V17460-ICND-005-00.dgn	
LAB10AA201	LAB10BR001	HP DRUM LEVEL CONTROL VALVE	HP	100	4	900#	DV	CNTRL	A216 WCB	AM	DIAPHRAGM	BW	Flowserve Valtek	262899.003	127.3	122	1845	250	ABPR2-M-S-PD-0137	V17460-ICND-003-00.dgn	
LAB10AA003	LAB10BR002	HP FEED WATER INLET	HP	150	6	1500#	SC	SWING CHECK	A216 WCB			BW	Tyco	70033644/200	127.3	323	1845	612	ABPR2-M-S-PD-0137	V17460-ICND-003-00.dgn	
LAB10AA102	LAB10BR002	HP ECONOMIZER INLET	HP	150	6	1500#	WG	GATE	A216 WCB	MO	MOTOR	BW	Tyco	70033644/300	127.3	323	1845	612	ABPR2-M-S-PD-0137	V17460-ICND-003-00.dgn	
LAB10AA501	LAB10BR501	HP ECONOMIZER INLET DRAIN	HP	25	1	1500#	GV	GLOBE	SA-105	H	MANUAL	SW	Velan	W05-3074B-02TY	127.3	122	1845	250	ABPR2-M-S-PD-0137	V17460-ICND-003-00.dgn	
LAB10AA502	LAB10BR501	HP ECONOMIZER INLET DRAIN	HP	25	1	1500#	GV	GLOBE	SA-105	H	MANUAL	SW	Velan	W05-3074B-02TY	127.3	122	1845	250	ABPR2-M-S-PD-0137	V17460-ICND-003-00.dgn	
LAB10AA503	LAB10BR502	HP ECONOMIZER INLET DRAIN	HP	25	1	1500#	GV	GLOBE	SA-105	H	MANUAL	SW	Velan	W05-3074B-02TY	127.3	323	1845	612	ABPR2-M-S-PD-0137	V17460-ICND-003-00.dgn	
LAB10AA504	LAB10BR502	HP ECONOMIZER INLET DRAIN	HP	25	1	1500#	GV	GLOBE	SA-105	H	MANUAL	SW	Velan	W05-3074B-02TY	127.3	323	1845	612	ABPR2-M-S-PD-0137	V17460-ICND-003-00.dgn	
LAB10AA505	LAB10BR504	HP ECONOMIZER INLET DRAIN	HP	25	1	1500#	GV	GLOBE	SA-105	H	MANUAL	SW	Velan	W05-3074B-02TY	114.5	323	1660	612	ABPR2-M-S-PD-0137	V17460-ICND-003-00.dgn	
LAB10AA506	LAB10BR504	HP ECONOMIZER INLET DRAIN	HP	25	1	1500#	GV	GLOBE	SA-105	H	MANUAL	SW	Velan	W05-3074B-02TY	114.5	323	1660	612	ABPR2-M-S-PD-0137	V17460-ICND-003-00.dgn	
LAB10AA701	LAB10BR701	HP ATTEMP FW FLOW TRANSMITTER	HP	20	0.75	1500#	GV	GLOBE	SA-105	H	MANUAL	SW	Velan	W04-3074B-02TY	127.3	122	1845	250	ABPR2-M-S-PD-0137	V17460-ICND-003-00.dgn	
LAB10AA702	LAB10BR701	HP ATTEMP FW FLOW TRANSMITTER	HP	20	0.75	1500#	GV	GLOBE	SA-105	H	MANUAL	SW	Velan	W04-3074B-02TY	127.3	122	1845	250	ABPR2-M-S-PD-0137	V17460-ICND-003-00.dgn	
LAB10AA703	LAB10BR702	HP ATTEMP FW FLOW TRANSMITTER	HP	20	0.75	1500#	GV	GLOBE	SA-105	H	MANUAL	SW	Velan	W04-3074B-02TY	127.3	122	1845	250	ABPR2-M-S-PD-0137	V17460-ICND-003-00.dgn	
LAB10AA704	LAB10BR702	HP ATTEMP FW FLOW TRANSMITTER	HP	20	0.75	1500#	GV	GLOBE	SA-105	H	MANUAL	SW	Velan	W04-3074B-02TY	127.3	122	1845	250	ABPR2-M-S-PD-0137	V17460-ICND-003-00.dgn	
LAB10AA705	LAB10BR703	HP ECON INLET FEED PRESS IND	HP	20	0.75	1500#	GV	GLOBE	SA-105	H	MANUAL	SW	Velan	W04-3074B-02TY	114.5	323	1660	612	ABPR2-M-S-PD-0137	V17460-ICND-003-00.dgn	
LAB10AA706	LAB10BR703	HP ECON INLET FEED PRESS IND	HP	20	0.75	1500#	GV	GLOBE	SA-105	H	MANUAL	SW	Velan	W04-3074B-02TY	114.5	323	1660	612	ABPR2-M-S-PD-0137	V17460-ICND-003-00.dgn	
LAB10AA707	LAB10BR704	HP ECON INLET FEED PRESS TRANS	HP	20	0.75	1500#	GV	GLOBE	SA-105	H	MANUAL	SW	Velan	W04-3074B-02TY	114.5	323	1660	612	ABPR2-M-S-PD-0137	V17460-ICND-003-00.dgn	
LAB24AA007	LAB24BR010	DA TO HP PUMP NOZZLE	DA	80	3	900#	GV	GLOBE	A216 WCB	H	MANUAL	BW	Tyco	U411XAP	127.3	122	1845	250	ABPR2-M-S-PD-0139	V17460-ICND-005-00.dgn	
LAB25AA007	LAB25BR010	DA TO HP PUMP NOZZLE	DA	80	3	900#	GV	GLOBE	A216 WCB	H	MANUAL	BW	Tyco	U411XAP	127.3	122	1845	250	ABPR2-M-S-PD-0139	V17460-ICND-005-00.dgn	
LAB26AA007	LAB26BR010	DA TO HP PUMP NOZZLE	DA	80	3	900#	GV	GLOBE	A216 WCB	H	MANUAL	BW	Tyco	U411XAP	127.3	122	1845	250	ABPR2-M-S-PD-0139	V17460-ICND-005-00.dgn	
LAB50AA001	LAB50BR002	LP FW INLET	LP	80	3	300#	SC	SWING CHECK	A216 WCB			BW	Tyco	6000C-3CSC03W01F5	29.4	235	425	454	ABPR2-M-S-PD-0138	V17460-ICND-004-00.dgn	
LAB50AA101	LAB50BR002	LP FW INLET	LP	80	3	300#	WG	GATE	A216 WCB	MO	MOTOR	BW	Tyco	6000C-3CGA03W01F5	29.4	235	425	454	ABPR2-M-S-PD-0138	V17460-ICND-004-00.dgn	
LAB50AA401	LAB50BR401	LP FW INLET SAFETY VALVE	LP	50	2	300#	SV	SAFETY VALVE (ANGLE)	A216 WCC	SR	SELF REG.	FLG	Dresser	2-2910-40H-1-CC-TD-E-RF-SS-SR	29.4	235	425	454	ABPR2-M-S-PD-0138	V17460-ICND-004-00.dgn	
LAB50AA501	LAB50BR501	LP FW INLET DRAIN	LP	25	1	800#	GV	GLOBE	SA-105	H	MANUAL	SW	Velan	W05-2074B-02TY	29.4	122	425	250	ABPR2-M-S-PD-0138	V17460-ICND-004-00.dgn	

Valve_Tag	Line_Tag	Service	Sys	Valve_Size (DN)	Valve_Size (NPS)	Ansi_Class	Customer's Valve Abbr.	Type	Valve_Matl	Customer's Oper. Abbr.	Oper_Type	Connection Type	Manuf	Model_No	D_Press_Bar	D_Temp_C	D_Press_PSIG	D_Temp_F	Customer's PID No.	VPI PID's No.	Notes
LAB50AA503	LAB50BR502	LP FW INLET DRAIN	LP	25	1	**800#**	GV	GLOBE	SA-105	H	MANUAL	SW	Velan	W05-2074B-02TY	29.4	235	425	454	ABPR2-M-S-PD-0138	V17460-ICND-004-00.dgn	
LAB50AA505	LAB50BR503	LP FW INLET DRAIN	LP	25	1	**800#**	GV	GLOBE	SA-105	H	MANUAL	SW	Velan	W05-2074B-02TY	29.4	235	425	454	ABPR2-M-S-PD-0138	V17460-ICND-004-00.dgn	
LAB50AA506	LAB50BR503	LP FW INLET DRAIN	LP	25	1	**800#**	GV	GLOBE	SA-105	H	MANUAL	SW	Velan	W05-2074B-02TY	29.4	235	425	454	ABPR2-M-S-PD-0138	V17460-ICND-004-00.dgn	
LAB50AA701	LAB50BR701	LP FW FLOW TRANSMITTER	LP	20	0.75	**800#**	GV	GLOBE	SA-105	H	MANUAL	SW	Velan	W04-2074B-02TY	29.4	122	425	250	ABPR2-M-S-PD-0138	V17460-ICND-004-00.dgn	
LAB50AA702	LAB50BR702	LP FW FLOW TRANSMITTER	LP	20	0.75	**800#**	GV	GLOBE	SA-105	H	MANUAL	SW	Velan	W04-2074B-02TY	29.4	122	425	250	ABPR2-M-S-PD-0138	V17460-ICND-004-00.dgn	
LAB50AA703	LAB50BR703	LP FW INLET PRESSURE GAUGE	LP	20	0.75	**800#**	GV	GLOBE	SA-105	H	MANUAL	SW	Velan	W04-2074B-02TY	29.4	235	425	454	ABPR2-M-S-PD-0138	V17460-ICND-004-00.dgn	
LAB50AA704	LAB50BR703	LP FW INLET PRESSURE GAUGE	LP	20	0.75	**800#**	GV	GLOBE	SA-105	H	MANUAL	SW	Velan	W04-2074B-02TY	29.4	235	425	454	ABPR2-M-S-PD-0138	V17460-ICND-004-00.dgn	
LAB50AA705	LAB50BR704	LP FW INLET PRESSURE TRANSMITTER	LP	20	0.75	**800#**	GV	GLOBE	SA-105	H	MANUAL	SW	Velan	W04-2074B-02TY	29.4	235	425	454	ABPR2-M-S-PD-0138	V17460-ICND-004-00.dgn	
LAB54AA010	LAB54BR010	DA TO LP PUMP NOZZLE	DA	40	1.5	**800#**	GV	GLOBE	SA-105	H	MANUAL	SW	Velan	**W07-2074B-02TS**	29.4	122	425	250	ABPR2-M-S-PD-0139	V17460-ICND-005-00.dgn	
LAB55AA010	LAB55BR010	DA TO LP PUMP NOZZLE	DA	40	1.5	**800#**	GV	GLOBE	SA-105	H	MANUAL	SW	Velan	**W07-2074B-02TS**	29.4	122	425	250	ABPR2-M-S-PD-0139	V17460-ICND-005-00.dgn	
LAB56AA010	LAB56BR010	DA TO LP PUMP NOZZLE	DA	40	1.5	**800#**	GV	GLOBE	SA-105	H	MANUAL	SW	Velan	**W07-2074B-02TS**	29.4	122	425	250	ABPR2-M-S-PD-0139	V17460-ICND-005-00.dgn	
LAE10AA003	LAE10BR001	HP ATTEMP SPRAYWATER	HP	50	2	**1500#**	WG	GATE	SA-105	H	MANUAL	SW	Velan	W08-3054B-02TY	127.3	122	1845	250	ABPR2-M-S-PD-0137	V17460-ICND-003-00.dgn	
LAE10AA101	LAE10BR001	HP ATTEMP SPRAYWATER	HP	50	2	**1690#**	YG	GLOBE	SA-105	MO	MOTOR	SW	Velan	W08-8076Z-02TS-M	127.3	122	1845	250	ABPR2-M-S-PD-0137	V17460-ICND-003-00.dgn	
LAE10AA004	LAE10BR002	HP ATTEMP SPRAYWATER CHECK	HP	50	2	**1690#**	**LC**	CHECK	SA-182 F22			SW	Velan	W08-8036W-06TS	89.7	500	1300	931	ABPR2-M-S-PD-0137	V17460-ICND-003-00.dgn	
LAE10AA502	LAE10BR501	HP ATTEMP SPRAYWATER	HP	25	1	**1500#**	GV	GLOBE	SA-105	H	MANUAL	SW	Velan	W05-3074B-02TY	127.3	122	1845	250	ABPR2-M-S-PD-0137	V17460-ICND-003-00.dgn	
LAE10AA503	LAE10BR502	HP ATTEMP SPRAYWATER	HP	25	1	**1500#**	GV	GLOBE	SA-105	H	MANUAL	SW	Velan	W05-3074B-02TY	127.3	122	1845	250	ABPR2-M-S-PD-0137	V17460-ICND-003-00.dgn	
LAE10AA504	LAE10BR502	HP ATTEMP SPRAYWATER	HP	25	1	**1500#**	GV	GLOBE	SA-105	H	MANUAL	SW	Velan	W05-3074B-02TY	127.3	122	1845	250	ABPR2-M-S-PD-0137	V17460-ICND-003-00.dgn	
LAE10AA505	LAE10BR502	HP ATTEMP SPRAYWATER	HP	25	1	**1500#**	GV	GLOBE	SA-105	H	MANUAL	SW	Velan	W05-3074B-02TY	127.3	122	1845	250	ABPR2-M-S-PD-0137	V17460-ICND-003-00.dgn	
LAE10AA701	LAE10BR701	HP ATTEMP SPRAYWATER	HP	20	0.75	**1500#**	GV	GLOBE	SA-105	H	MANUAL	SW	Velan	W04-3074B-02TY	127.3	122	1845	250	ABPR2-M-S-PD-0137	V17460-ICND-003-00.dgn	
LAE10AA702	LAE10BR701	HP ATTEMP SPRAYWATER	HP	20	0.75	**1500#**	GV	GLOBE	SA-105	H	MANUAL	SW	Velan	W04-3074B-02TY	127.3	122	1845	250	ABPR2-M-S-PD-0137	V17460-ICND-003-00.dgn	
LAE10AA703	LAE10BR702	HP ATTEMP SPRAYWATER	HP	20	0.75	**1500#**	GV	GLOBE	SA-105	H	MANUAL	SW	Velan	W04-3074B-02TY	127.3	122	1845	250	ABPR2-M-S-PD-0137	V17460-ICND-003-00.dgn	
LAE10AA704	LAE10BR702	HP ATTEMP SPRAYWATER	HP	20	0.75	**1500#**	GV	GLOBE	SA-105	H	MANUAL	SW	Velan	W04-3074B-02TY	127.3	122	1845	250	ABPR2-M-S-PD-0137	V17460-ICND-003-00.dgn	
LAE10AA705	LAE10BR703	HP ATTEMP SPRAYWATER	HP	20	0.75	**1500#**	GV	GLOBE	SA-105	H	MANUAL	SW	Velan	W04-3074B-02TY	127.3	122	1845	250	ABPR2-M-S-PD-0137	V17460-ICND-003-00.dgn	
LAE10AA706	LAE10BR703	HP ATTEMP SPRAYWATER	HP	20	0.75	**1500#**	GV	GLOBE	SA-105	H	MANUAL	SW	Velan	W04-3074B-02TY	127.3	122	1845	250	ABPR2-M-S-PD-0137	V17460-ICND-003-00.dgn	
LAE10AA707	LAE10BR704	HP ATTEMP SPRAYWATER	HP	20	0.75	**1500#**	GV	GLOBE	SA-105	H	MANUAL	SW	Velan	W04-3074B-02TY	127.3	122	1845	250	ABPR2-M-S-PD-0137	V17460-ICND-003-00.dgn	
LAE10AA708	LAE10BR704	HP ATTEMP SPRAYWATER	HP	20	0.75	**1500#**	GV	GLOBE	SA-105	H	MANUAL	SW	Velan	W04-3074B-02TY	127.3	122	1845	250	ABPR2-M-S-PD-0137	V17460-ICND-003-00.dgn	
LAE10AA709	LAE10BR705	HP ATTEMP SPRAYWATER	HP	20	0.75	**1500#**	GV	GLOBE	SA-105	H	MANUAL	SW	Velan	W04-3074B-02TY	127.3	122	1845	250	ABPR2-M-S-PD-0137	V17460-ICND-003-00.dgn	
LAE10AA710	LAE10BR705	HP ATTEMP SPRAYWATER	HP	20	0.75	**1500#**	GV	GLOBE	SA-105	H	MANUAL	SW	Velan	W04-3074B-02TY	127.3	122	1845	250	ABPR2-M-S-PD-0137	V17460-ICND-003-00.dgn	
LBG20AA006	LBG20BR010	LP STEAM TO DA	DA	150	6	150#		STOPCHECK	**A216 WCB**	H	MANUAL	BW	Tyco	**6000C-6CGL01W01F5**	11.1	256	160	492	ABPR2-M-S-PD-0139	V17460-ICND-005-00.dgn	
LBG20AA202	LBG20BR020	**DA PEGGING STEAM CONTROL VALVE**	DA	150	6	150#	**DV**	CNTRL	**A216 WCB**	**AM**	DIAPHRAGM	BW	**Flowserve Valtek**	**262899.007**	11.1	256	160	492	ABPR2-M-S-PD-0139	V17460-ICND-005-00.dgn	
LCA50AA201	LCA50BR020	CONDENSATE TO DA CONTROL VALVE	DA	**100**	**4**	**300#**	**DV**	CNTRL	**A216 WCB**	**AM**	DIAPHRAGM	BW	**Flowserve Valtek**	**262899.008**	27.6	55	400	130	ABPR2-M-S-PD-0139	V17460-ICND-005-00.dgn	
LCA50AA502	LCA50BR510	CONDENSATE TO DA DRAIN	DA	25	1	**800#**	GV	GLOBE	SA-105	H	MANUAL	SW	Velan	W05-2074B-02TY	27.6	55	400	130	ABPR2-M-S-PD-0139	V17460-ICND-005-00.dgn	
LCA50AA503	LCA50BR510	CONDENSATE TO DA DRAIN	DA	25	1	**800#**	GV	GLOBE	SA-105	H	MANUAL	SW	Velan	W05-2074B-02TY	27.6	55	400	130	ABPR2-M-S-PD-0139	V17460-ICND-005-00.dgn	
LCQ10AA501	LCQ10BR501	BLOWDOWN TANK DRAIN	BD	50	2	**800#**	GV	GLOBE	SA-105	H	MANUAL	SW	Velan	W08-2074B-02TY	3.5	149	50	300	ABPR2-M-S-PD-0140	V17460-ICND-006-00.dgn	
LCQ10AA502	LCQ10BR501	BLOWDOWN TANK DRAIN	BD	50	2	**800#**	GV	GLOBE	SA-105	H	MANUAL	SW	Velan	W08-2074B-02TY	3.5	149	50	300	ABPR2-M-S-PD-0140	V17460-ICND-006-00.dgn	
LCQ10AA004	LCQ10BR506	BLOWDOWN TANK COOLING WATER CHECK	BD	50	2	**800#**	**LC**	CHECK	SA-105			SW	Velan	W08-2034B-02TY	3.5	149	50	300	ABPR2-M-S-PD-0140	V17460-ICND-006-00.dgn	
LCQ10AA201	LCQ10BR506	BLOWDOWN TANK COOLING WATER CONTROL VALVE	BD	**25**	**1**	150#	**DV**	CNTRL	**A216 WCB**	**AM**	DIAPHRAGM	SW	**Flowserve Valtek**	**262899.010**	3.5	149	50	300	ABPR2-M-S-PD-0140	V17460-ICND-006-00.dgn	
LCQ10AA701	LCQ10BR701	BLOWDOWN TANK LEVEL GAUGE	BD	40	1.5	**800#**	WG	GATE	SA-105	H	MANUAL	SW	Velan	W07-2054B-02TY	3.5	149	50	300	ABPR2-M-S-PD-0140	V17460-ICND-006-00.dgn	
LCQ10AA702	LCQ10BR702	BLOWDOWN TANK LEVEL GAUGE	BD	40	1.5	**800#**	WG	GATE	SA-105	H	MANUAL	SW	Velan	W07-2054B-02TY	3.5	149	50	300	ABPR2-M-S-PD-0140	V17460-ICND-006-00.dgn	
LCQ10AA703	LCQ10BR703	BLOWDOWN TANK PRESSURE IND	BD	20	0.75	**800#**	GV	GLOBE	SA-105	H	MANUAL	SW	Velan	W04-2074B-02TY	3.5	149	50	300	ABPR2-M-S-PD-0140	V17460-ICND-006-00.dgn	
LCQ10AA704	LCQ10BR704	BLOWDOWN TANK LEVEL GAUGE	BD	40	1.5	**800#**	WG	GATE	SA-105	H	MANUAL	SW	Velan	W07-2054B-02TY	3.5	149	50	300	ABPR2-M-S-PD-0140	V17460-ICND-006-00.dgn	
LCQ10AA705	LCQ10BR705	BLOWDOWN TANK LEVEL GAUGE	BD	40	1.5	**800#**	WG	GATE	SA-105	H	MANUAL	SW	Velan	W07-2054B-02TY	3.5	149	50	300	ABPR2-M-S-PD-0140	V17460-ICND-006-00.dgn	
LCQ11AA501	LCQ11BR511	BLOWDOWN TANK LEVEL GAUGE DRAIN	BD	15	0.5	**800#**	GV	GLOBE	SA-105	H	MANUAL	SW	Velan	W03-2074B-02TS	3.5	149	50	300	ABPR2-M-S-PD-0140	V17460-ICND-006-00.dgn	
LCQ11AA512	LCQ11BR512	BLOWDOWN TANK LEVEL GAUGE DRAIN	BD	15	0.5	**800#**	GV	GLOBE	SA-105	H	MANUAL	SW	Velan	W03-2074B-02TS	3.5	149	50	300	ABPR2-M-S-PD-0140	V17460-ICND-006-00.dgn	

Vogt Power International • 4000 Dupont Circle • Louisville, Kentucky 40207 • www.vogtpower.com

INSTRUMENT LIST

FOR

TPSC

FOR

Vogt Power International Job 17460 (SSP Amata City 2 CCCP)

VOGT POWER INTERNATIONAL DOCUMENT NO. V17460-ICNA-004

OWNER		
Amata B. Grimm Power (Rayong) 2 Limited		
PROJECT		
ABPR2 Combined Cycle Cogeneration Plant Project		
CONTRACTOR		
Sumitomo Corporation		
TITLE		
HRSG INSTRUMENT LIST		
PROJECT CONTROL NO.	ABPR2-K-S-HA-1004	REV. 6

Prepared By: **Damon Blissett (I & C Engineer)**

Reviewed By: **Kathy Hugle (Project Engineer)**

Approved By: **Matt Kreis (Manager of Project Engineer)**

Revision	Date	Engineer	Description	Pages Revised
0	13-Jul-2011	D. Blissett	Initial Issue	
1	25-Jul-2011	D. Blissett	Correct LP FW FE/FT Tag Name	
2	7-Oct-2011	D. Blissett	General Revision	
3	18-Oct-2011	D. Blissett	Correct Tag Names	
4	15-Mar-2012	N. Pazmino	Customer Comments	
5	2-Jun-2012	D. Blissett	General Revision	
6	12-Nov-2012	D. Blissett	General Revision	

1.0 DESCRIPTION OF INSTRUMENT LIST

1.1 All Instruments shown on P&ID have been assigned tag numbers in accordance with the Instrument List.

1.2 Both unit tag numbers can be identified by the following system. The letter “X” given in each prefix of the instrument tag equals “21” for Unit 21 and “22” for Unit 22. For instruments in the condensate system, the letter “X” given in each prefix of the instrument tag equals “20”. For instruments in the deaerator and heat exchanger, the letter “X” given in each prefix of the instrument tag equals “02”.

OWNER		
Amata B. Grimm Power (Rayong) 2 Limited		
PROJECT		
ABPR2 Combined Cycle Cogeneration Plant Project		
CONTRACTOR		
Sumitomo Corporation		
TITLE		
HRSG INSTRUMENT LIST		
PROJECT CONTROL NO.	ABPR2-K-S-HA-1004	REV. 6

VOGT POWER INTERNATIONAL
INSTRUMENT LIST
(KKS)

CUSTOMER TAG NUMBER	SYSTEM	SERVICE DESCRIPTION	CALIBRATION / MEASUREMENT RANGE	DESIGN PRESS. (BARG)	DESIGN TEMP. (℃)	MAXIMUM OPERATING PRESS. (BARG)	MAXIMUM OPERATING TEMP. (℃)	POWER REQUIREMENT	SIGNAL TYPE	NOMINAL SIZE	MATERIAL OF CONSTRUCTION	PROCESS CONNECTION SIZE	TYPE	MANUFACTURER	MODEL NUMBER	PROJECT CONTROL NUMBER	P&ID
XHAH10CT401	HP	Steam Outlet Test Thermowell	N/A	85.1	533.3	79.0	527.5	N/A	N/A	1.5" (38.1mm) Actual OD	SA-182 F22	1/2" FNPT	Tapered, Stepless, Weld-In	JMS Southeast	5XXW2XXE1	ABPR2-M-S-PD-0137	V17460-ICND-003
XHAH10CT501	HP	Steam Outlet Temperature Indicator	200 to 650 ℃	85.1	533.3	79.0	527.5	N/A	Visual	4 1/2" (114m m) Dial Face	316SS	1/2" MNPT	Gas-Actuated	Ashcroft	45-600B-03-200/650C-XSGNH-CD1	ABPR2-M-S-PD-0137	V17460-ICND-003
XHAH10CT501	HP	Steam Outlet Temperature Indicator Thermowell	N/A	85.1	533.3	79.0	527.5	N/A	N/A	1.5" (38.1mm) Actual OD	SA-182 F22	1/2" FNPT	Tapered, Stepless, Weld-In	JMS Southeast	5XXW3XXE1	ABPR2-M-S-PD-0137	V17460-ICND-003
XHAH10CT004	HP	Steam Outlet Temperature Element	-200 to 900 ℃	85.1	533.3	79.0	527.5	N/A	Type E, mV	1/4" (6 .35mm) Dia.	316SS Sheath / MgO Insulation	3/4" FNPT / 1/2" FNPT	Elec. Conn. / Inst. Conn.	JMS Southeast	1E4BKU5.5EXZZZMX1	ABPR2-M-S-PD-0137	V17460-ICND-003
XHAH10CT004	HP	Steam Outlet Temperature Element Thermowell	N/A	85.1	533.3	79.0	527.5	N/A	N/A	1.5" (38.1mm) Actual OD	SA-182 F22	1/2" FNPT	Tapered, Stepless, Weld-In	JMS Southeast	54XW2XXE1	ABPR2-M-S-PD-0137	V17460-ICND-003
XHAH10CT003	HP	Steam Outlet Temperature Element	-200 to 900 ℃	85.1	533.3	79.0	527.5	N/A	Type E, mV	1/4" (6 .35mm) Dia.	316SS Sheath / MgO Insulation	3/4" FNPT / 1/2" FNPT	Elec. Conn. / Inst. Conn.	JMS Southeast	1E4BKU5.5EXZZZMX1	ABPR2-M-S-PD-0137	V17460-ICND-003
XHAH10CT003	HP	Steam Outlet Temperature Element Thermowell	N/A	85.1	533.3	79.0	527.5	N/A	N/A	1.5" (38.1mm) Actual OD	SA-182 F22	1/2" FNPT	Tapered, Stepless, Weld-In	JMS Southeast	54XW2XXE1	ABPR2-M-S-PD-0137	V17460-ICND-003
XHAH10CP002	HP	Steam Outlet Pressure Transmitter	0 (4 mA) to 90 (20 mA) barg	85.1	533.3	79.0	527.5	Loop Powered	4-20mA	N/A	316L SS	1/2" MNPT	Pressure	Foxboro	IGP10-T22E1F-M1Z1T	ABPR2-M-S-PD-0137	V17460-ICND-003
XHAH10CP501	HP	Steam Outlet Pressure Gauge	0 to 100 barg	85.1	533.3	79.0	527.5	N/A	Visual	4 1/2" Dial Face	316SS	1/2" MNPT	Lower Stem Connection	Ashcroft	45-1259SD-04L-XOSSG	ABPR2-M-S-PD-0137	V17460-ICND-003
XHAH10CT006	HP	Steam Outlet Temperature Element (Drain Line)	-200 to 900 ℃	85.1	533.3	79.0	527.5	N/A	Type E, mV	1/4" (6 .35mm) Dia.	316SS Sheath / MgO Insulation	3/4" FNPT / 1/2" FNPT	Elec. Conn. / Inst. Conn.	JMS Southeast	1E4BKU5.5EXZZZMX1	ABPR2-M-S-PD-0137	V17460-ICND-003
XHAH10CT006	HP	Steam Outlet Temperature Element Thermowell (Drain Line)	N/A	85.1	533.3	79.0	527.5	N/A	N/A	1.5" (38.1mm) Actual OD	SA-182 F22	1/2" FNPT	Tapered, Stepless, Weld-In	JMS Southeast	54XW2XXE1	ABPR2-M-S-PD-0137	V17460-ICND-003
XHAH10CT005	HP	Attemperator Outlet Temperature Element (Drain Line)	-200 to 900 ℃	89.6	499.4	79.6	475.4	N/A	Typ e E, mV	1/4" (6.35mm) Dia.	316SS Sheath / MgO Insulation	3/4" FNPT / 1/2" FNPT	Elec. Conn. / Inst. Conn.	JMS Southeast	1E4BKU6.5EXZZZMX1	ABPR2-M-S-PD-0137	V17460-ICND-003
XHAH10CT005	HP	Attemperator Outlet Temperature Element Thermowell (Drain Line)	N/A	89.6	499.4	79.6	475.4	N/A	N/A	1.5" (38.1mm) Actual OD	SA-182 F22	1/2" FNPT	Tapered, Stepless, Weld-In	JMS Southeast	54XW2XXE1	ABPR2-M-S-PD-0137	V17460-ICND-003
XHAH10CT002	HP	Attemperator Outlet Temperature Element	-200 to 900 ℃	89.6	499.4	79.6	475.4	N/A	Type E, mV	1/4" (6 .35mm) Dia.	316SS Sheath / MgO Insulation	3/4" FNPT / 1/2" FNPT	Elec. Conn. / Inst. Conn.	JMS Southeast	1E4BKU6.5EXZZZMX1	ABPR2-M-S-PD-0137	V17460-ICND-003
XHAH10CT002	HP	Attemperator Outlet Temperature Element Thermowell	N/A	89.6	499.4	79.6	475.4	N/A	N/A	1.5" (38.1mm) Actual OD	SA-182 F22	1/2" FNPT	Tapered, Stepless, Weld-In	JMS Southeast	54XW2XXE1	ABPR2-M-S-PD-0137	V17460-ICND-003
XLAE10CP002	HP	Attemperator Spraywater Differential Pressure Transmitter	0 (4 mA) to 1.4 (20 mA) barg	127.2	121.1	N/A	105.5	Loop Powered	4-20mA	N/A	316L SS	1/2" MNPT	Pressure	Foxboro	IDP10-T22C21F-M1Z1T	ABPR2-M-S-PD-0137	V17460-ICND-003
XLAE10CF501	HP	Attemperator Spraywater Flow Element	0 to **3000** kg/hr	127.2	121.1	N/A	105.5	N/A	N/A	2"	SA-106 Gr. B	Butt Weld	Flow Nozzle	Vickery-Simms	VFN-1261-1	ABPR2-M-S-PD-0137	V17460-ICND-003
XLAE10CF001	HP	Attemperator Spraywater Flow Transmitter	0 (4 mA) to **145.6** (20 mA) mmwc	127.2	121.1	N/A	105.5	Loop Powered	4-20mA	N/A	316L SS	1/2" FNPT	Differential Pressure	Foxboro	IDP10-T22A21F-M1Z1T	ABPR2-M-S-PD-0137	V17460-ICND-003
XLAE10CP001	HP	Attemperator Spraywater Pressure Transmitter	0 (4 mA) to 140 (20 mA) barg	127.2	121.1	N/A	105.5	Loop Powered	4-20mA	N/A	316L SS	1/2" MNPT	Pressure	Foxboro	IGP10-T22E1F-M1Z1T	ABPR2-M-S-PD-0137	V17460-ICND-003
XLAE10CT001	HP	Attemperator Spraywater Temperature Element	-200 to 900 ℃	127.2	121.1	N/A	105.5	N/A	Type E, mV	1/4 " (6.35mm) Dia.	316SS Sheath / MgO Insulation	3/4" FNPT / 1/2" FNPT	Elec. Conn. / Inst. Conn.	JMS Southeast	1E4BKU4EXZZZMX1	ABPR2-M-S-PD-0137	V17460-ICND-003
XLAE10CT001	HP	Attemperator Spraywater Temperature Element Thermowell	N/A	127.2	121.1	N/A	105.5	N/A	N/A	1" (25.4mm) SW	SA-105	1/2" FNPT	Tapered, Stepless, Socket Weld	JMS Southeast	53XS2BZG1	ABPR2-M-S-PD-0137	V17460-ICND-003
XLAE10CT401	HP	Attemperator Spraywater Test Thermowell	N/A	127.2	121.1	N/A	105.5	N/A	N/A	1" (25.4mm) SW	SA-105	1/2" FNPT	Tapered, Stepless, Socket Weld	JMS Southeast	5XXS2BZG1	ABPR2-M-S-PD-0137	V17460-ICND-003
XHAH10CT001	HP	Attemperator Inlet Temperature Element	-200 to 900 ℃	89.6	499.4	79.7	499.1	N/A	Type E, mV	1/4" (6 .35mm) Dia.	316SS Sheath / MgO Insulation	3/4" FNPT / 1/2" FNPT	Elec. Conn. / Inst. Conn.	JMS Southeast	1E4BKU6.5EXZZZMX1	ABPR2-M-S-PD-0137	V17460-ICND-003
XHAH10CT001	HP	Attemperator Inlet Temperature Element Thermowell	N/A	89.6	499.4	79.7	499.1	N/A	N/A	1.5" (38.1mm) Actual OD	SA-182 F22	1/2" FNPT	Tapered, Stepless, Weld-In	JMS Southeast	54XW2XXE1	ABPR2-M-S-PD-0137	V17460-ICND-003
XHAH10CP001	HP	Attemperator Inlet Pressure Transmitter	0 (4 mA) to 100 (20 mA) barg	89.6	499.4	79.7	499.1	Loop Powered	4-20mA	N/A	316L SS	1/2" MNPT	Pressure	Foxboro	IGP10-T22E1F-M1Z1T	ABPR2-M-S-PD-0137	V17460-ICND-003
XHAD10CL501	HP	Drum Level Gauge / Water Column Assembly	N/A	89.6	303.9	81.9	296.9	230Vac	Visual	Min. 2.5"	Steel / Water Column	1 1/2" SW	Bi-Color	Clark-Reliance	P4010	ABPR2-M-S-PD-0137	V17460-ICND-003
XHAD10CL004	HP	Drum Remote Level Indicator Assembly	N/A	89.6	303.9	81.9	296.9	230Vac	Dry Contact	Min. 2.5"	Steel / Water Column	1 1/2" SW	Conductivity Probe	Clark-Reliance	ECILM 10R SMI 4X 220V	ABPR2-M-S-PD-0137	V17460-ICND-003
XHAD10CL502	HP	Drum Level Indicator	N/A	89.6	303.9	81.9	296.9	230Vac	24Vdc	N/A	N/A	N/A	N/A	Clark-Reliance	SMI-10BD	ABPR2-M-S-PD-0137	V17460-ICND-003
XHAD10CL503	HP	Drum Level Indicator	N/A	89.6	303.9	81.9	296.9	230Vac	24Vdc	N/A	N/A	N/A	N/A	Clark-Reliance	MTI-10B	ABPR2-M-S-PD-0137	V17460-ICND-003
XHAD10CL001	HP	Drum Level Transmitter	-1283 (4 mA) to 0 (20 mA) mmwc	89.6	303.9	81.9	296.9	Loop Powered	4-20mA	N/A	316L SS	1/2" FNPT	Differential Pressure	Foxboro	IDP10-T22B21F-M1Z1T	ABPR2-M-S-PD-0137	V17460-ICND-003
XHAD10BB501	HP	Drum Level Transmitter Condensate Pot	N/A	89.6	303.9	81.9	296.9	N/A	N/A	3" x 11" (76.2 x 279.4mm)	SA-106 Gr. B	1/2" SW / 1/2" FNPT / 1/2" FNPT	Side / Top / Bottom	Quality Products & Sales	3" x 11" A105 S/80	ABPR2-M-S-PD-0137	V17460-ICND-003
XHAD10CL002	HP	Drum Level Transmitter	-1283 (4 mA) to 0 (20 mA) mmwc	89.6	303.9	81.9	296.9	Loop Powered	4-20mA	N/A	316L SS	1/2" FNPT	Differential Pressure	Foxboro	IDP10-T22B21F-M1Z1T	ABPR2-M-S-PD-0137	V17460-ICND-003
XHAD10BB502	HP	Drum Level Transmitter Condensate Pot	N/A	89.6	303.9	81.9	296.9	N/A	N/A	3" x 11" (76.2 x 279.4mm)	SA-106 Gr. B	1/2" SW / 1/2" FNPT / 1/2" FNPT	Side / Top / Bottom	Quality Products & Sales	3" x 11" A105 S/80	ABPR2-M-S-PD-0137	V17460-ICND-003
XHAD10CL003	HP	Drum Level Transmitter	-1283 (4 mA) to 0 (20 mA) mmwc	89.6	303.9	81.9	296.9	Loop Powered	4-20mA	N/A	316L SS	1/2" FNPT	Differential Pressure	Foxboro	IDP10-T22B21F-M1Z1T	ABPR2-M-S-PD-0137	V17460-ICND-003
XHAD10BB503	HP	Drum Level Transmitter Condensate Pot	N/A	89.6	303.9	81.9	296.9	N/A	N/A	3" x 11" (76.2 x 279.4mm)	SA-106 Gr. B	1/2" SW / 1/2" FNPT / 1/2" FNPT	Side / Top / Bottom	Quality Products & Sales	3" x 11" A105 S/80	ABPR2-M-S-PD-0137	V17460-ICND-003
XHAD10CP501	HP	Drum Pressure Gauge	0 to 160 barg	89.6	303.9	81.9	296.9	N/A	Visual	4 1/2" (114mm) Dial Face	316SS	1/2" MNPT	Lower Stem Connection	Ashcroft	45-1259SD-04L-XOSSG	ABPR2-M-S-PD-0137	V17460-ICND-003
XHAD10CP001	HP	Drum Pressure Transmitter	0 (4 mA) to 100 (20 mA) barg	89.6	303.9	81.9	296.9	Loop Powered	4-20mA	N/A	316L SS	1/2" MNPT	Pressure	Foxboro	IGP10-T22E1F-M1Z1T	ABPR2-M-S-PD-0137	V17460-ICND-003
XHAD10CP002	HP	Drum Pressure Transmitter	0 (4 mA) to 100 (20 mA) barg	89.6	303.9	81.9	296.9	Loop Powered	4-20mA	N/A	316L SS	1/2" MNPT	Pressure	Foxboro	IGP10-T22E1F-M1Z1T	ABPR2-M-S-PD-0137	V17460-ICND-003
XHAC20CT501	HP	Feedwater Outlet Temperature Indicator	50 to 450 ℃	98.9	311.1	80.9	246.8	N/A	Visual	5" (127mm) Di al Face	316SS	1/2" MNPT	Bi-Metal	Ashcroft	50-EI-60E-090-50/450C-XSGNH-CD1	ABPR2-M-S-PD-0137	V17460-ICND-003
XHAC20CT501	HP	Feedwater Outlet Temperature Indicator Thermowell	N/A	98.9	311.1	80.9	246.8	N/A	N/A	1" (25.4mm) SW	SA-105	1/2" FNPT	Tapered, Stepless, Socket Weld	JMS Southeast	5XXS2XZG1	ABPR2-M-S-PD-0137	V17460-ICND-003
XHAC20CT001	HP	Feedwater Outlet Temperature Element	-200 to 900 ℃	98.9	311.1	80.9	292.7	N/A	Type E, mV	1/4" (6 .35mm) Dia.	316SS Sheath / MgO Insulation	3/4" FNPT / 1/2" FNPT	Elec. Conn. / Inst. Conn.	JMS Southeast	1E4BKU5EXZZZMX1	ABPR2-M-S-PD-0137	V17460-ICND-003
XHAC20CT001	HP	Feedwater Outlet Temperature Element Thermowell	N/A	98.9	311.1	80.9	292.7	N/A	N/A	1" (25.4mm) SW	SA-105	1/2" FNPT	Tapered, Stepless, Socket Weld	JMS Southeast	53XS2XZG1	ABPR2-M-S-PD-0137	V17460-ICND-003
XLAB10CT401	HP	Feedwater Inlet Test Thermowell	N/A	114.5	322.2	87.1	105.4	N/A	N/A	1" (25.4mm) SW	SA-105	1/2" FNPT	Tapered, Stepless, Socket Weld	JMS Southeast	5XXS2XZG1	ABPR2-M-S-PD-0137	V17460-ICND-003
XLAB10CT001	HP	Feedwater Inlet Temperature Element	-200 to 900 ℃	114.5	322.2	87.1	105.4	N/A	Type E, mV	1/4" (6.35mm) Dia.	316SS Sheath / MgO Insulation	3/4" FNPT / 1/2" FNPT	Elec. Conn. / Inst. Conn.	JMS Southeast	1E4BKU5EXZZZMX1	ABPR2-M-S-PD-0137	V17460-ICND-003
XLAB10CT001	HP	Feedwater Inlet Temperature Element Thermowell	N/A	114.5	322.2	87.1	105.4	N/A	N/A	1" (25.4mm) SW	SA-105	1/2" FNPT	Tapered, Stepless, Socket Weld	JMS Southeast	53XS2XZG1	ABPR2-M-S-PD-0137	V17460-ICND-003
XLAB10CP001	HP	Feedwater Inlet Pressure Transmitter	0 (4 mA) to 120 (20 mA) barg	114.5	322.2	87.1	105.4	Loop Powered	4-20mA	N/A	316L SS	1/2" MNPT	Pressure	Foxboro	IGP10-T22E1F-M1Z1T	ABPR2-M-S-PD-0137	V17460-ICND-003
XLAB10CP501	HP	Feedwater Inlet Pressure Gauge	0 to 160 barg	114.5	322.2	87.1	105.4	N/A	Visual	4 1/2" (114mm) Dial Face	316SS	1/2" MNPT	Lower Stem Connection	Ashcroft	45-1259SD-04L-XOSSG	ABPR2-M-S-PD-0137	V17460-ICND-003
XLAB31CF001	HP	Feedwater Inlet Flow Element	0 to 71,096.31 kg/hr	114.5	322.2	87.1	105.4	N/A	N/A	6"	SA-105	Butt Weld	Flow Nozzle	Vickery-Simms	VFN-1261-2	ABPR2-M-S-PD-0137	V17460-ICND-003
XLAB31CF002	HP	Feedwater Inlet Flow Transmitter	0 (4 mA) to 2540 (20 mA) mmwc	114.5	322.2	87.1	105.4	Loop Powered	4-20mA	N/A	316L SS	1/2" FNPT	Differential Pressure	Foxboro	IDP10-T22A21F-M1Z1T	ABPR2-M-S-PD-0137	V17460-ICND-003
XLAB32CF001	HP	Feedwater Inlet Flow Element	0 to 71,096.31 kg/hr	114.5	322.2	87.1	105.4	N/A	N/A	6"	SA-105	Butt Weld	Flow Nozzle	Vickery-Simms	VFN-1261-2	ABPR2-M-S-PD-0137	V17460-ICND-003
XLAB32CF002	HP	Feedwater Inlet Flow Transmitter	0 (4 mA) to 254 (20 mA) mmwc	114.5	322.2	87.1	105.4	Loop Powered	4-20mA	N/A	316L SS	1/2" FNPT	Differential Pressure	Foxboro	IDP10-T22A21F-M1Z1T	ABPR2-M-S-PD-0137	V17460-ICND-003
XHAH50CT401	LP	Steam Outlet Test Thermowell	N/A	11.0	255.6	8.3	246.8	N/A	N/A	1.5" (38.1mm) Actual OD	SA-105	1/2" FNPT	Tapered, Stepless, Weld-In	JMS Southeast	5XXW2XXG1	ABPR2-M-S-PD-0138	V17460-ICND-004
XHAH50CT501	LP	Steam Outlet Temperature Indicator	0 to 300 ℃	11.0	255.6	8.3	246.8	N/A	Visual	5" (127mm) Dial Face	316SS	1/2" MNPT	Bi-Metal	Ashcroft	50-EI-60E-090-0/300C-XSGNH-CD1	ABPR2-M-S-PD-0138	V17460-ICND-004
XHAH50CT501	LP	Steam Outlet Temperature Indicator Thermowell	N/A	11.0	255.6	8.3	246.8	N/A	N/A	1.5" (38.1mm) Actual OD	SA-105	1/2" FNPT	Tapered, Stepless, Weld-In	JMS Southeast	5XXW2XXG1	ABPR2-M-S-PD-0138	V17460-ICND-004
XHAH50CT001	LP	Steam Outlet Temperature Element	-200 to 900 ℃	11.0	255.6	8.3	246.8	N/A	Type E, mV	1/4" (6. 35mm) Dia.	316SS Sheath / MgO Insulation	3/4" FNPT / 1/2" FNPT	Elec. Conn. / Inst. Conn.	JMS Southeast	1E4BKU5.5EXZZZMX1	ABPR2-M-S-PD-0138	V17460-ICND-004
XHAH50CT001	LP	Steam Outlet Temperature Element Thermowell	N/A	11.0	255.6	8.3	246.8	N/A	N/A	1.5" (38.1mm) Actual OD	SA-105	1/2" FNPT	Tapered, Stepless, Weld-In	JMS Southeast	54XW2XXG1	ABPR2-M-S-PD-0138	V17460-ICND-004
XHAH50CP001	LP	Steam Outlet Pressure Transmitter	0 (4 mA) to 15 (20 mA) barg	11.0	255.6	8.3	246.8	Loop Powered	4-20mA	N/A	316L SS	1/2" MNPT	Pressure	Foxboro	IGP10-T22D1F-M1Z1T	ABPR2-M-S-PD-0138	V17460-ICND-004
XHAH50CP501	LP	Steam Outlet Pressure Gauge	0 to 16 barg	11.0	255.6	8.3	246.8	N/A	Visual	4 1/2" (114mm) Dial Face	316SS	1/2" MNPT	Lower Stem Connection	Ashcroft	45-1259SD-04L-XOSSG	ABPR2-M-S-PD-0138	V17460-ICND-004
XHAH50CT002	LP	Steam Outlet Temperature Element (Drain Line)	-200 to 900 ℃	11.0	255.6	8.3	246.8	N/A	Type E, mV	1/4" (6. 35mm) Dia.	316SS Sheath / MgO Insulation	3/4" FNPT / 1/2" FNPT	Elec. Conn. / Inst. Conn.	JMS Southeast	1E4BKU5.5EXZZZMX1	ABPR2-M-S-PD-0138	V17460-ICND-004
XHAH50CT002	LP	Steam Outlet Temperature Element Thermowell (Drain Line)	N/A	11.0	255.6	8.3	246.8	N/A	N/A	1.5" (38.1mm) Actual OD	SA-105	1/2" FNPT	Tapered, Stepless, Weld-In	JMS Southeast	54XW2XXG1	ABPR2-M-S-PD-0138	V17460-ICND-004
XHAD50CL501	LP	Drum Level Gauge / Water Column Assembly	N/A	12.4	193.3	9.5	178.7	N/A	Visual	Min. 2.5"	Steel / Water Column	1 1/2" SW	Reflex Glass	Clark-Reliance	C88	ABPR2-M-S-PD-0138	V17460-ICND-004
XHAD50CL004	LP	Drum Remote Level Indicator Assembly	N/A	12.4	193.3	9.5	178.7	230Vac	Dry Contact	Min. 2.5"	Steel / Water Column	1 1/2" SW	Conductivity Probe	Clark-Reliance	ECILM 10R SMI 4X 220V	ABPR2-M-S-PD-0138	V17460-ICND-004
XHAD50CL502	LP	Drum Level Indicator	N/A	12.4	193.3	9.5	178.7	230Vac	24Vdc	N/A	N/A	N/A	N/A	Clark-Reliance	SMI-10BD	ABPR2-M-S-PD-0138	V17460-ICND-004
XHAD50CL503	LP	Drum Level Indicator	N/A	12.4	193.3	9.5	178.7	230Vac	24Vdc	N/A	N/A	N/A	N/A	Clark-Reliance	MTI-10B	ABPR2-M-S-PD-0138	V17460-ICND-004
XHAD50CL001	LP	Drum Level Transmitter	-787 (4 mA) to 0 (20 mA) mmwc	12.4	193.3	9.5	178.7	Loop Powered	4-20mA	N/A	316L SS	1/2" FNPT	Differential Pressure	Foxboro	IDP10-T22B21F-M1Z1T	ABPR2-M-S-PD-0138	V17460-ICND-004
XHAD50BB501	LP	Drum Level Transmitter Condensate Pot	N/A	12.4	193.3	9.5	178.7	N/A	N/A	3" x 11" (76.2 x 279.4mm)	SA-106 Gr. B	1/2" SW / 1/2" FNPT / 1/2" FNPT	Side / Top / Bottom	Quality Products & Sales	3" x 11" A105 S/80	ABPR2-M-S-PD-0138	V17460-ICND-004
XHAD50CL002	LP	Drum Level Transmitter	-787 (4 mA) to 0 (20 mA) mmwc	12.4	193.3	9.5	178.7	Loop Powered	4-20mA	N/A	316L SS	1/2" FNPT	Differential Pressure	Foxboro	IDP10-T22B21F-M1Z1T	ABPR2-M-S-PD-0138	V17460-ICND-004
XHAD50BB502	LP	Drum Level Transmitter Condensate Pot	N/A	12.4	193.3	9.5	178.7	N/A	N/A	3" x 11" (76.2 x 279.4mm)	SA-106 Gr. B	1/2" SW / 1/2" FNPT / 1/2" FNPT	Side / Top / Bottom	Quality Products & Sales	3" x 11" A105 S/80	ABPR2-M-S-PD-0138	V17460-ICND-004
XHAD50CL003	LP	Drum Level Transmitter	-787 (4 mA) to 0 (20 mA) mmwc	12.4	193.3	9.5	178.7	Loop Powered	4-20mA	N/A	316L SS	1/2" FNPT	Differential Pressure	Foxboro	IDP10-T22B21F-M1Z1T	ABPR2-M-S-PD-0138	V17460-ICND-004
XHAD50BB503	LP	Drum Level Transmitter Condensate Pot	N/A	12.4	193.3	9.5	178.7	N/A	N/A	3" x 11" (76.2 x 279.4mm)	SA-106 Gr. B	1/2" SW / 1/2" FNPT / 1/2" FNPT	Side / Top / Bottom	Quality Products & Sales	3" x 11" A105 S/80	ABPR2-M-S-PD-0138	V17460-ICND-004
XHAD50CP501	LP	Drum Pressure Gauge	0 to 25 barg	12.4	193.3	9.5	178.7	N/A	Visual	4 1/2" (114mm) Dial Face	316SS	1/2" MNPT	Lower Stem Connection	Ashcroft	45-1259SD-04L-XOSSG	ABPR2-M-S-PD-0138	V17460-ICND-004
XHAD50CP001	LP	Drum Pressure Transmitter	0 (4 mA) to 15 (20 mA) barg	12.4	193.3	9.5	178.7	Loop Powered	4-20mA	N/A	316L SS	1/2" MNPT	Pressure	Foxboro	IGP10-T22D1F-M1Z1T	ABPR2-M-S-PD-0138	V17460-ICND-004
XHAD50CP002	LP	Drum Pressure Transmitter	0 (4 mA) to 15 (20 mA) barg	12.4	193.3	9.5	178.7	Loop Powered	4-20mA	N/A	316L SS	1/2" MNPT	Pressure	Foxboro	IGP10-T22D1F-M1Z1T	ABPR2-M-S-PD-0138	V17460-ICND-004
XHAC50CT501	LP	Feedwater Outlet Temperature Indicator	0 to 300 ℃	29.3	234.4	12.0	171.3	N/A	Visual	5" (127mm) Dia l Face	316SS	1/2" MNPT	Bi-Metal	Ashcroft	50-EI-60E-090-0/300C-XSGNH-CD1	ABPR2-M-S-PD-0138	V17460-ICND-004
XHAC50CT501	LP	Feedwater Outlet Temperature Indicator Thermowell	N/A	29.3	234.4	12.0	171.3	N/A	N/A	1" (25.4mm) SW	SA-105	1/2" FNPT	Tapered, Stepless, Socket Weld	JMS Southeast	5XXS2XZG1	ABPR2-M-S-PD-0138	V17460-ICND-004
XHAC50CT001	LP	Feedwater Outlet Temperature Element	-200 to 900 ℃	29.3	234.4	12.0	171.3	N/A	Type E, mV	1/4" (6 .35mm) Dia.	316SS Sheath / MgO Insulation	3/4" FNPT / 1/2" FNPT	Elec. Conn. / Inst. Conn.	JMS Southeast	1E4BKU3.5EXZZZMX1	ABPR2-M-S-PD-0138	V17460-ICND-004

VOGT POWER INTERNATIONAL
INSTRUMENT LIST
(KKS)

CUSTOMER TAG NUMBER	SYSTEM	SERVICE DESCRIPTION	CALIBRATION / MEASUREMENT RANGE	DESIGN PRESS. (BARG)	DESIGN TEMP. (℃)	MAXIMUM OPERATING PRESS. (BARG)	MAXIMUM OPERATING TEMP. (℃)	POWER REQUIREMENT	SIGNAL TYPE	NOMINAL SIZE	MATERIAL OF CONSTRUCTION	PROCESS CONNECTION SIZE	TYPE	MANUFACTURER	MODEL NUMBER	PROJECT CONTROL NUMBER	P&ID
XHAC50CT001	LP	Feedwater Outlet Temperature Element Thermowell	N/A	29.3	234.4	12.0	171.3	N/A	N/A	1" (25.4mm) SW	SA-105	1/2" FNPT	Tapered, Stepless, Socket Weld	JMS Southeast	53XS2XZG1	ABPR2-M-S-PD-0138	V17460-ICND-004
XLAB50CT401	LP	Feedwater Inlet Test Thermowell	N/A	29.3	234.4	13.4	104.9	N/A	N/A	1" (25.4mm) SW	SA-105	1/2" FNPT	Tapered, Stepless, Socket Weld	JMS Southeast	5XXS2XZG1	ABPR2-M-S-PD-0138	V17460-ICND-004
XLAB50CT001	LP	Feedwater Inlet Temperature Element	-200 to 900 ℃	29.3	234.4	13.4	104.9	N/A	Type E, mV	1/4" (6 .35mm) Dia.	316SS Sheath / MgO Insulation	3/4" FNPT / 1/2" FNPT	Elec. Conn. / Inst. Conn.	JMS Southeast	1E4BKU3.5EXZZZMX1	ABPR2-M-S-PD-0138	V17460-ICND-004
XLAB50CT001	LP	Feedwater Inlet Temperature Element Thermowell	N/A	29.3	234.4	13.4	104.9	N/A	N/A	1" (25.4mm) SW	SA-105	1/2" FNPT	Tapered, Stepless, Socket Weld	JMS Southeast	53XS2XZG1	ABPR2-M-S-PD-0138	V17460-ICND-004
XLAB50CP501	LP	Feedwater Inlet Pressure Gauge	0 to 40 barg	29.3	234.4	13.4	104.9	N/A	Visual	4 1/2" (114mm) Dial Face	316SS	1/2" MNPT	Lower Stem Connection	Ashcroft	45-1259SD-04L-XOSSG	ABPR2-M-S-PD-0138	V17460-ICND-004
XLAB50CP001	LP	Feedwater Inlet Pressure Transmitter	0 (4 mA) to 35 (20 mA) barg	29.3	234.4	13.4	104.9	Loop Powered	4-20mA	N/A	316L SS	1/2" MNPT	Pressure	Foxboro	IGP10-T22E1F-M1Z1T	ABPR2-M-S-PD-0138	V17460-ICND-004
XLAB61CF001	LP	Feedwater Inlet Flow Element	0 to **43,000** kg/hr	29.3	234.4	13.4	104.9	N/A	N/A	3"	SA-106 Gr. B	Butt Weld	Flow Nozzle	Vickery-Simms	VFN-1261-4	ABPR2-M-S-PD-0138	V17460-ICND-004
XLAB61CF002	LP	Feedwater Inlet Flow Transmitter	0 (4 mA) to **1480.2** (20 mA) mmwc	29.3	234.4	13.4	104.9	Loop Powered	4-20mA	N/A	316L SS	1/2" FNPT	Differential Pressure	Foxboro	IDP10-T22B21F-M1Z1T	ABPR2-M-S-PD-0138	V17460-ICND-004
XLAB62CF001	LP	Feedwater Inlet Flow Element	0 to **43,000** kg/hr	29.3	234.4	13.4	104.9	N/A	N/A	3"	SA-106 Gr. B	Butt Weld	Flow Nozzle	Vickery-Simms	VFN-1261-4	ABPR2-M-S-PD-0138	V17460-ICND-004
XLAB62CF002	LP	Feedwater Inlet Flow Transmitter	0 (4 mA) to **1480.2** (20 mA) mmwc	29.3	234.4	13.4	104.9	Loop Powered	4-20mA	N/A	316L SS	1/2" FNPT	Differential Pressure	Foxboro	IDP10-T22B21F-M1Z1T	ABPR2-M-S-PD-0138	V17460-ICND-004
XLCA50CT001	DA	Deaerator Inlet Temperature Element	-200 to 900 ℃	27.6	176.7	N/A	N/A	N/A	Type E, mV	1/4" (6.35 mm) Dia.	316SS Sheath / MgO Insulation	3/4" FNPT / 1/2" FNPT	Elec. Conn. / Inst. Conn.	JMS Southeast	1E4BKU5.5EXZZZMX1	ABPR2-M-S-PD-0139	V17460-ICND-005
XLCA50CT001	DA	Deaerator Inlet Temperature Element Thermowell	N/A	27.6	176.7	N/A	N/A	N/A	N/A	1" (25.4mm) SW	SA-105	1/2" FNPT	Tapered, Stepless, Weld-In	JMS Southeast	53XS2XZG1	ABPR2-M-S-PD-0139	V17460-ICND-005
XLAA11CP501	DA	Deaerator Pressure Gauge	0 to 10 barg	3.4	54.4	N/A	N/A	N/A	Visual	4 1/2" (114mm) Dial Face	316SS	1/2" MNPT	Lower Stem Connection	Ashcroft	45-1259SD-04L-XOSSG	ABPR2-M-S-PD-0139	V17460-ICND-005
XLAA11CP001	DA	Deaerator Pressure Transmitter	0 (4 mA) to 8 (20 mA) barg	3.4	54.4	N/A	N/A	Loop Powered	4-20mA	N/A	316L SS	1/2" MNPT	Pressure	Foxboro	IGP10-T22D1F-M1Z1T	ABPR2-M-S-PD-0139	V17460-ICND-005
XLAA10CT001	BOILER	Storage Tank Temperature Element	-200 to 900 ℃	3.4	121.1	N/A	N/A	N/A	Type E, mV	1/4" (6.35m m) Dia.	316SS Sheath / MgO Insulation	3/4" FNPT / 1/2" FNPT	Elec. Conn. / Inst. Conn.	JMS Southeast	1E4BKU9EXZZZMX1	ABPR2-M-S-PD-0139	V17460-ICND-005
XLAA10CT001	BOILER	Storage Tank Temperature Element Thermowell	N/A	3.4	121.1	N/A	N/A	N/A	N/A	1" (25.4mm) SW	SA-105	1/2" FNPT	Tapered, Stepless, Weld-In	JMS Southeast	53XS2EZG1	ABPR2-M-S-PD-0139	V17460-ICND-005
XLAA10CT002	BOILER	Storage Tank Temperature Element	-200 to 900 ℃	3.4	121.1	N/A	N/A	N/A	Type E, mV	1/4" (6.35m m) Dia.	316SS Sheath / MgO Insulation	3/4" FNPT / 1/2" FNPT	Elec. Conn. / Inst. Conn.	JMS Southeast	1E4BKU9EXZZZMX1	ABPR2-M-S-PD-0139	V17460-ICND-005
XLAA10CT002	BOILER	Storage Tank Temperature Element Thermowell	N/A	3.4	121.1	N/A	N/A	N/A	N/A	1" (25.4mm) SW	SA-105	1/2" FNPT	Tapered, Stepless, Weld-In	JMS Southeast	53XS2EZG1	ABPR2-M-S-PD-0139	V17460-ICND-005
XLAA10CL501	BOILER	Storage Tank Level Gauge	N/A	3.4	121.1	N/A	N/A	N/A	Visual	Min. 2.5"	Steel / Water Column	1 1/2" SW	Reflex Glass	Clark-Reliance	68R20	ABPR2-M-S-PD-0139	V17460-ICND-005
XLAA10CL001	BOILER	Storage Tank Level Transmitter	3606.8 (4 mA) to 0 (20 mA) mmwc	3.4	121.1	N/A	N/A	Loop Powered	4-20mA	N/A	316L SS	1/2" FNPT	Differential Pressure	Foxboro	IDP10-T22B21F-M1Z1T	ABPR2-M-S-PD-0139	V17460-ICND-005
XLAA10BB501	BOILER	Storage Tank Level Transmitter Condensate Pot	N/A	3.4	121.1	N/A	N/A	N/A	N/A	3" x 11" (76.2 x 279.4mm)	SA-106 Gr. B	1/2" SW / 1/2" FNPT / 1/2" FNPT	Side / Top / Bottom	Quality Products & Sales	3" x 11" A105 S/80	ABPR2-M-S-PD-0139	V17460-ICND-005
XLAA10CL002	BOILER	Storage Tank Level Transmitter	3606.8 (4 mA) to 0 (20 mA) mmwc	3.4	121.1	N/A	N/A	Loop Powered	4-20mA	N/A	316L SS	1/2" FNPT	Differential Pressure	Foxboro	IDP10-T22B21F-M1Z1T	ABPR2-M-S-PD-0139	V17460-ICND-005
XLAA10BB502	BOILER	Storage Tank Level Transmitter Condensate Pot	N/A	3.4	121.1	N/A	N/A	N/A	N/A	3" x 11" (76.2 x 279.4mm)	SA-106 Gr. B	1/2" SW / 1/2" FNPT / 1/2" FNPT	Side / Top / Bottom	Quality Products & Sales	3" x 11" A105 S/80	ABPR2-M-S-PD-0139	V17460-ICND-005
XLAA10CF501	BOILER	Storage Tank Inlet Flow Element	0 to 27,500 kg/hr	29.3	234.4	15.3	98.0	N/A	N/A	3"	SA-106 Gr. B	Butt Weld	Flow Nozzle	Vickery-Simms	VFN-1261-3	ABPR2-M-S-PD-0139	V17460-ICND-005
XLAA10CF001	BOILER	Storage Tank Inlet Flow Transmitter	0 (4 mA) to 386.4 (20 mA) mmwc	29.3	234.4	15.3	98.0	Loop Powered	4-20mA	N/A	316L SS	1/2" FNPT	Differential Pressure	Foxboro	IDP10-T22A21F-M1Z1T	ABPR2-M-S-PD-0139	V17460-ICND-005
XLCQ10CT001	BD	Blowdown Tank Temperature Element	-200 to 900 ℃	3.4	148.9	N/A	N/A	N/A	Type E, mV	1/4" (6.35m m) Dia.	316SS Sheath / MgO Insulation	3/4" FNPT / 1/2" FNPT	Elec. Conn. / Inst. Conn.	JMS Southeast	1E4BKU9EXZZZMX1	ABPR2-M-S-PD-0140	V17460-ICND-006
XLCQ10CT001	BD	Blowdown Tank Temperature Element Thermowell	N/A	3.4	148.9	N/A	N/A	N/A	N/A	1" (25.4mm) SW	SA-105	1/2" FNPT	Tapered, Stepless, Weld-In	JMS Southeast	53XS2EZG1	ABPR2-M-S-PD-0140	V17460-ICND-006
XLCQ10CT501	BD	Blowdown Tank Temperature Indicator	10 to 200 ℃	3.4	148.9	N/A	N/A	N/A	Visual	5" (127mm) Dial F ace	316SS	1/2" MNPT	Bi-Metal	Ashcroft	50-EI-60E-150-0/200C-XSGNH-CD1	ABPR2-M-S-PD-0140	V17460-ICND-006
XLCQ10CT501	BD	Blowdown Tank Temperature Indicator Thermowell	N/A	3.4	148.9	N/A	N/A	N/A	N/A	1" (25.4mm) SW	SA-105	1/2" FNPT	Tapered, Stepless, Weld-In	JMS Southeast	5XXS2EZG1	ABPR2-M-S-PD-0140	V17460-ICND-006
XLCQ10CP501	BD	Blowdown Tank Pressure Gauge	0 to 6 barg	3.4	148.9	N/A	N/A	N/A	Visual	4 1/2" (114mm) Dial Face	316SS	1/2" MNPT	Lower Stem Connection	Ashcroft	45-1259SD-04L-XOSSG	ABPR2-M-S-PD-0140	V17460-ICND-006
XLCQ10CL501	BD	Blowdown Tank Level Gauge	N/A	3.4	148.9	N/A	N/A	N/A	Visual	Min. 2.5"	Steel / Water Column	1 1/2" SW	Reflex Glass	Clark-Reliance	37R20	ABPR2-M-S-PD-0140	V17460-ICND-006
XLCQ10CL201	BD	Blowdown Tank Level Switch	N/A	3.4	148.9	N/A	N/A	N/A	N/A	N/A	SA-106 Gr. B	1 1/2" SW	Conductivity Probe	Quest-Tec	LT-310	ABPR2-M-S-PD-0140	V17460-ICND-006
XLCQ10CL202	BD	Blowdown Tank Level Switch	N/A	3.4	148.9	N/A	N/A	N/A	N/A	N/A	SA-106 Gr. B	1 1/2" SW	Conductivity Probe	Quest-Tec	LT-310	ABPR2-M-S-PD-0140	V17460-ICND-006
XLCQ10CT002	BD	Blowdown Tank Discharge Temperature Element	-200 to 900 ℃	3.4	148.9	N/A	N/A	N/A	Type E, mV	1/4" (6.3 5mm) Dia.	316SS Sheath / MgO Insulation	3/4" FNPT / 1/2" FNPT	Elec. Conn. / Inst. Conn.	JMS Southeast	1E4BKU4EXZZZMX1	ABPR2-M-S-PD-0140	V17460-ICND-006
XLCQ10CT002	BD	Blowdown Tank Discharge Temperature Element Thermowell	N/A	3.4	148.9	N/A	N/A	N/A	N/A	1" (25.4mm) SW	SA-105	1/2" FNPT	Tapered, Stepless, Socket Weld	JMS Southeast	53XS2BZG1	ABPR2-M-S-PD-0140	V17460-ICND-006
XHNB10CP001	FG	Flue Gas Pressure Transmitter	0 (4 mA) to 850mm (20 mA) H_2O	762 mm H_2O	648.9	508 mm H_2O	597.1	Loop Powered	4-20mA	N/A	316L SS	1/2" MNPT	Pressure	Foxboro	IGP20-T22B21F-M1Z1T	ABPR2-M-S-PD-0136	V17460-ICND-002
XHNB10CP002	FG	Flue Gas Pressure Transmitter	0 (4 mA) to 850mm (20 mA) H_2O	762 mm H_2O	648.9	508 mm H_2O	597.1	Loop Powered	4-20mA	N/A	316L SS	1/2" MNPT	Pressure	Foxboro	IGP20-T22B21F-M1Z1T	ABPR2-M-S-PD-0136	V17460-ICND-002
XHNB10CP003	FG	Flue Gas Pressure Transmitter	0 (4 mA) to 850mm (20 mA) H_2O	762 mm H_2O	648.9	508 mm H_2O	597.1	Loop Powered	4-20mA	N/A	316L SS	1/2" MNPT	Pressure	Foxboro	IGP20-T22B21F-M1Z1T	ABPR2-M-S-PD-0136	V17460-ICND-002
XHNB10CP004	FG	Flue Gas Pressure Transmitter	0 (4 mA) to 850mm (20 mA) H_2O	762 mm H_2O	648.9	508 mm H_2O	597.1	Loop Powered	4-20mA	N/A	316L SS	1/2" MNPT	Pressure	Foxboro	IGP20-T22B21F-M1Z1T	ABPR2-M-S-PD-0136	V17460-ICND-002
XHNA11CT001	FG	Flue Gas Temp. Into MB #5801 Temperature Element	-200 to 900 ℃	N/A	648.9	N/A	597.1	N/A	Type E, mV	1/4" (6.35mm) Dia.	316SS Sheath / MgO Insulation	3/4" FNPT / 1/2" FNPT	Elec. Conn. / Inst. Conn.	JMS Southeast	1E4BKU28.75EXZZZMX1	ABPR2-M-S-PD-0136	V17460-ICND-002
XHNA11CT001	FG	Flue Gas Temp. Into MB #5801 Temperature Element Thermowell	N/A	762 mm H_2O	648.9	508 mm H_2O	597.1	N/A	N/A	1" Nominal, Sch. 40 Pipe	316 Gr. L	2" MNPT	Protection Tube	JMS Southeast	5PXX10XZX1	ABPR2-M-S-PD-0136	V17460-ICND-002
XHNA11CT002	FG	Flue Gas Temp. Into MB #5801 Temperature Element	-200 to 900 ℃	N/A	648.9	N/A	597.1	N/A	Type E, mV	1/4" (6.35mm) Dia.	316SS Sheath / MgO Insulation	3/4" FNPT / 1/2" FNPT	Elec. Conn. / Inst. Conn.	JMS Southeast	1E4BKU28.75EXZZZMX1	ABPR2-M-S-PD-0136	V17460-ICND-002
XHNA11CT002	FG	Flue Gas Temp. Into MB #5801 Temperature Element Thermowell	N/A	762 mm H_2O	648.9	508 mm H_2O	597.1	N/A	N/A	1" Nominal, Sch. 40 Pipe	316 Gr. L	2" MNPT	Protection Tube	JMS Southeast	5PXX10XZX1	ABPR2-M-S-PD-0136	V17460-ICND-002
XHNA11CT003	FG	Flue Gas Temp. Into MB #5801 Temperature Element	-200 to 900 ℃	N/A	648.9	N/A	597.1	N/A	Type E, mV	1/4" (6.35mm) Dia.	316SS Sheath / MgO Insulation	3/4" FNPT / 1/2" FNPT	Elec. Conn. / Inst. Conn.	JMS Southeast	1E4BKU28.75EXZZZMX1	ABPR2-M-S-PD-0136	V17460-ICND-002
XHNA11CT003	FG	Flue Gas Temp. Into MB #5801 Temperature Element Thermowell	N/A	762 mm H_2O	648.9	508 mm H_2O	597.1	N/A	N/A	1" Nominal, Sch. 40 Pipe	316 Gr. L	2" MNPT	Protection Tube	JMS Southeast	5PXX10XZX1	ABPR2-M-S-PD-0136	V17460-ICND-002
XHNA11CT004	FG	Flue Gas Temp. Into MB #5801 Temperature Element	-200 to 900 ℃	N/A	648.9	N/A	597.1	N/A	Type E, mV	1/4" (6.35mm) Dia.	316SS Sheath / MgO Insulation	3/4" FNPT / 1/2" FNPT	Elec. Conn. / Inst. Conn.	JMS Southeast	1E4BKU28.75EXZZZMX1	ABPR2-M-S-PD-0136	V17460-ICND-002
XHNA11CT004	FG	Flue Gas Temp. Into MB #5801 Temperature Element Thermowell	N/A	762 mm H_2O	648.9	508 mm H_2O	597.1	N/A	N/A	1" Nominal, Sch. 40 Pipe	316 Gr. L	2" MNPT	Protection Tube	JMS Southeast	5PXX10XZX1	ABPR2-M-S-PD-0136	V17460-ICND-002
XHNE10CT001	FG	Flue Gas Temp. Out Of STACK Temperature Element	-200 to 900 ℃	N/A	148.9	N/A	119.7	N/A	Type E, mV	1 /4" (6.35mm) Dia.	316SS Sheath / MgO Insulation	3/4" FNPT / 1/2" FNPT	Elec. Conn. / Inst. Conn.	JMS Southeast	1E4BKU28.75EXZZZMX1	ABPR2-M-S-PD-0136	V17460-ICND-002
XHNE10CT001	FG	Flue Gas Temp. Out Of STACK Temperature Element Thermowell	N/A	762 mm H_2O	148.9	508 mm H_2O	119.7	N/A	N/A	1" Nominal, Sch. 40 Pipe	316 Gr. L	2" MNPT	Protection Tube	JMS Southeast	5PXX10XZX1	ABPR2-M-S-PD-0136	V17460-ICND-002
XHNE10CT002	FG	Flue Gas Temp. Out Of STACK Temperature Element	-200 to 900 ℃	N/A	148.9	N/A	119.7	N/A	Type E, mV	1 /4" (6.35mm) Dia.	316SS Sheath / MgO Insulation	3/4" FNPT / 1/2" FNPT	Elec. Conn. / Inst. Conn.	JMS Southeast	1E4BKU28.75EXZZZMX1	ABPR2-M-S-PD-0136	V17460-ICND-002
XHNE10CT002	FG	Flue Gas Temp. Out Of STACK Temperature Element Thermowell	N/A	762 mm H_2O	148.9	508 mm H_2O	119.7	N/A	N/A	1" Nominal, Sch. 40 Pipe	316 Gr. L	2" MNPT	Protection Tube	JMS Southeast	5PXX10XZX1	ABPR2-M-S-PD-0136	V17460-ICND-002

4000 Dupont Circle
Louisville, Kentucky 40207

GENERAL NOTES & DATA
For
SPP ABPR2 Amata City Project

For

Vogt Power Job No. 17460
Vogt Power Document No. V17460-SENF-001

Prepared by: Kathy Hugle
Project Engineer

Reviewed by: R. Van Bogaert
Product Engineer

Approved by: M. Fisher
Engineering Manager

Number	Date	REVISION RECORD	Originator
0	13-Jul-11	Initial Release	KH
1	5-Oct-11	Add Serial Nos., general revision.	KH

OWNER

Amata B. Grimm Power (Rayong) 2 Limited

PROJECT

ABPR2 Combined Cycle Cogeneration Plant Project

CONTRACTOR

Sumitomo Corporation

TITLE

HRSG GENERAL NOTES AND DATA

PROJECT CONTROL NO.	ABPR2-K-S-HA-152	REV. 0

1. General Notes

1.1 Vogt Power International assumes no responsibility for defects in or failure of foundations or accessory equipment unless same is part of the contract.

1.2 Vogt Power International will not be responsible for any injury and/or damage resulting from the use of designs on these drawings of anything not actually furnished by Vogt Power International, whether so specifically indicated or not.

1.3 Do not scale any drawings supplied for this contract. Use Figure dimensions only.

1.4 "NF" indicates material not furnished by Vogt Power International or its vendors.

1.5 Except as permitted in Doc. V17460-APNF-001-00, Allowable Forces and Moments LB & SB - Pipe Stress Interface, or as agreed upon by Vogt Power International, Customer shall arrange pipe and valve connections to boiler and component parts so that no pipe loads, valve loads, expansion strains, or other stresses are imposed upon boiler connections. Reactions on load points as well as forces and moments in the piping at the stress analysis load points must be supplied to Vogt Power International for approval as stated in Doc. V17460-APNF-001-00

1.6 Discharge Lines of Superheater vents and Start-up drains must have outlets open to atmosphere to permit free flow; do not connect to steam traps or heater.

1.7 External blowdown piping connected to Intermittent Blowoff valves shall be suspended to move freely with the expansion movement of boiler pressure parts, placing no strain on blowdown valves.

1.8 All piping to be kept clear of all access doors and walkways for free accessibility.

1.9 The data shown reflect the maximum non-coincident values of pressure and temperature as stated in the contractual operating cases.

1.10 The HRSG is being designed, fabricated and tested to the 2010 Edition of the ASME Boiler Code, Section I. Boiler External Piping is being designed, fabricated and tested to the 2007 Edition of the ASME Boiler Code, Section B31.1. Non-boiler External Piping is being designed, fabricated and tested to the 2007 Edition, 2009 Addenda of the ASME Boiler Code, Section B31.1.

1.11 All flanges are raised face unless otherwise noted on the drawings.

1.12 The hydrostatic test pressure of the HP integral economizers have been set based on Section I, Interpretation: I-89-68.

1.13 Boilers are not registered with the National Board (USA).

1.14 The hydrostatic test pressure is based upon one and one half times the highest maximum allowable working pressure (MAWP) at the temperature during hydro per PG-99 for superheater and evaporator.

1.15 These notes apply only to the Amata B. Grim Power **(Rayong)** 2 Limited, SPP Amata City 2 CCCP Project, Vogt Power International Project Number 17460.

1.16 Revisions are indicated in **Bold and Underlined**.

2. Insulation and Materials

Section Description			Critical Inlet to Column B	Transition Column B to C	Column C to Box 1	Box 1
Insulation	Mat.[1,2]		Kaowool B 1800 (Blanket 8 LBS)	Kaowool B 1800 (Blanket 8 LBS)	Kaowool B 1800 (Blanket 8 LBS)	Kaowool B 1800 (Blanket 8 LBS)
	Top	Nom.	5" (127 mm)	5" (127 mm)	5" (127 mm)	5" (127 mm)
		Comp.	4 3/8" (111 mm)	4 3/8" (111 mm)	4 3/8" (111 mm)	4 3/8" (111 mm)
	Side	Nom.	5" (127 mm)	5" (127 mm)	5" (127 mm)	5" (127 mm)
		Comp.	4 3/8" (111 mm)	4 3/8" (111 mm)	4 3/8" (111 mm)	4 3/8" (111 mm)
	Bot.	Nom.	8" (203 mm)	8" (203 mm)	8" (203 mm)	8" (203 mm)
		Comp.	7 " (178 mm)	7 " (178 mm)	7 " (178 mm)	7 " (178 mm)
Liner	Mat.[3]		A-240 TP409	A-240 TP409	A-240 TP409	A-240 TP409
	Thk	Top	12 ga (2.70 mm)	16 ga (1.50 mm)	16 ga (1.50 mm)	16 ga (1.50 mm)
		Sides	12 ga (2.70 mm)	16 ga (1.50 mm)	16 ga (1.50 mm)	16 ga (1.50 mm)
		Bottom	12 ga (2.70 mm)	14 ga (2.00 mm)	14 ga (2.00 mm)	14 ga (2.00 mm)
Fasteners	Stud	Mat.[4]	A-479 TP304*	A-479 TP304*	A-479 TP304*	A-479 TP304*
		Size	1/2" (12 mm)	1/2" (12 mm)	1/2" (12 mm)	1/2" (12 mm)
		Spacing	7 1/2" (191 mm)	7 1/2" (191 mm)	15 " (381 mm)	15 " (381 mm)
		Pitch	Staggered	Staggered	Square	Square
	Nut	Mat[5]	F-594 TP304*	F-594 TP304*	F-594 TP304*	F-594 TP304*
		Series	Heavy Hex	Heavy Hex	Heavy Hex	Regular
	Wash.	Mat.[3]	A-240 TP409	A-240 TP409	A-240 TP409	A-240 TP409
		Thk.	12 ga (3.0 mm)	12 ga (3.0 mm)	12 ga (3.0 mm)	12 ga (3.0 mm)
Casing	Mat.		Carbon Steel	Carbon Steel	Carbon Steel	Carbon Steel
	Thk.		1/4" (6 mm)	1/4" (6 mm)	1/4" (6 mm)	1/4" (6 mm)
Liner Reinforcing Channels						
		Top	NO	NO	NO	NO
		Sides	NO	NO	NO	NO
		Bottom	NO	NO	NO	NO

See notes at the end of this section

2. Insulation and Materials (cont.)

Section Description			Box 2	Box 3		
Insulation	Mat.[1,2]		Kaowool B 1800 (Blanket 8 LBS)	Kaowool B 1800 (Blanket 8 LBS)		
	Top	Nom.	2" (51 mm)	2" (51 mm)		
		Comp.	1 3/4" (44 mm)	1 3/4" (44 mm)		
	Side	Nom.	2" (51 mm)	2" (51 mm)		
		Comp.	1 3/4" (44 mm)	1 3/4" (44 mm)		
	Bot.	Nom.	2" (51 mm)	2" (51 mm)		
		Comp.	1 3/4" (44 mm)	1 3/4" (44 mm)		
Liner	Mat.[3]		Carbon Steel	Carbon Steel		
	Thk	Top	14 ga (2.00 mm)	14 ga (2.00 mm)		
		Sides	14 ga (2.00 mm)	14 ga (2.00 mm)		
		Bottom	14 ga (2.00 mm)	14 ga (2.00 mm)		
Fasteners	Stud	Mat.[4]	A-108 TP 1010	A-108 TP 1010		
		Size	3/8" (10 mm)	3/8" (10 mm)		
		Spacing	15 " (381 mm)	15 " (381 mm)		
		Pitch	Square	Square		
	Nut	Mat[5]	A-593 Gr. A	A-593 Gr. A		
		Series	Regular	Regular		
	Wash.	Mat.[5]	A-569	A-569		
		Thk.	14 ga (2 mm)	14 ga (2.0 mm)		
Casing	Mat.		Carbon Steel	Carbon Steel		
	Thk.		1/4" (6 mm)	1/4" (6 mm)		
Liner Reinforcing Channels						
		Top	NO	NO		
		Sides	NO	NO		
		Bottom	NO	NO		

See notes at the end of this section

2. Insulation and Materials (cont.)

Notes:

304* denotes 304H or 304 with min. carbon content of 0.04%

[1] Insulation shall be certified as containing NO ASBESTOS
[2] Insulation material permissible substitutes - None
[3] Liner/Washer material permissible substitutes - None
[4] Stud material permissible substitutes - Type 321, 309S or 310S may be substituted for type 304* studs listed. Type 309S or 310S may be substituted for type 321 studs listed.
[5] Nut material permissible substitutes - Type 321, 309S or 310S may be substituted for type 304* nuts listed. Type 309S or 310S may be substituted for type 321 studs listed.

All ducts and casings have an internal design pressure of 17" w.c.

3 Reference Drawings and Data

3. 1 General Arrangement- Right Side Elevation – Drawing V17460-GAND-001

3. 2 General Arrangement-Left Side Elevation – Drawing V17460-GAND-002

3. 3 General Arrangement- Plan View – Drawing V17460-GAND-003

3. 4 Boiler Setting – Right Side Section – Drawing V17460-SEND-001

3. 5 Boiler Setting – Sections A & B – Drawing V17460-SEND-002

3. 6 Boiler Setting – Plan Section – Drawing V17460-SEND-003

3. 7 H.R.S.G. Foundation Diagram – Drawing V17460-FLND-001

3. 8 Piping and Instrumentation Diagrams – P&ID Legend & General Notes - Drawing V17460-ICND-001

3. 9 Piping and Instrumentation Diagrams – Flue Gas P&ID - Drawing V17460-ICND-002

3. 10 Piping and Instrumentation Diagrams – High Pressure P&ID - Drawing V17460-ICND-003

3. 11 Piping and Instrumentation Diagrams – Low Pressure P&ID - Drawing V17460-ICND-004

3. 12 Piping and Instrumentation Diagrams – DA, Storage Tank, and Heat Exchanger P&ID - Drawing V17460-ICND-005

3. 13 Piping and Instrumentation Diagrams – Blowdown, Silencer & PSV Vents and Drain P&ID - Drawing V17460-ICND-006

3. 14 Process Flow Diagram – Drawing V17460-ICND-010

3. 15 Line List – Document V17460-ICNA-001

3. 16 Terminal Point List – Document V17460-ICNA-002

3. 17 Valve List – Document V17460-ICNA-003

3. 18 Instrument List – Document V17460-ICNA-004

4 Design and Field Hydrotest Pressures

4.1	HP System						
	4.1.1 HP Economizer	Design Pressure	1435	psig	98.9	barg	
		Hydrotest Pressure	1950	psig	134.4	barg	*
	4.1.2 HP Superheater and Evaporator	Design Pressure	1300	psig	89.6	barg	
		Hydrotest Pressure	1950	psig	134.4	barg	
4.2	LP System						
	4.2.1 LP Economizer	Design Pressure	425	psig	29.3	barg	
		Hydrotest Pressure	638	psig	44.0	barg	*
	4.2.2 LP Superheater and Evaporator	Design Pressure	160	psig	11.0	barg	
4.3	HRSG Blowdown Tank	Design Pressure	50	psig	3.4	barg	
		Hydrotest Pressure	75	psig	5.2	barg	**

*Per ASME Section I Code Interpretation I-89-68

**Per ASME Section VIII

5. Boiler Stamping

Section Description	HP Boiler		LP Boiler		LP Economizer	
Certified by:	Vogt Power Int.		Vogt Power Int.		Vogt Power Int.	
Serial Number Unit 21	**17460-1A**		**17460-1B**		**17460-1C**	
Unit 22	**17460-2A**		**17460-2B**		**17460-2C**	
	psig	barg	psig	barg	psig	barg
MAWP*	1,300	89.6	160	11.0	425	29.3
Operating	1,146	79.0	120	8.3	174	12.0
Heating Surface	sq ft	sq M	sq ft	sq M	sq ft	sq M
Superheater	32,295	3,000	4,101	381		-
Evaporator	103,670	9,631	87,482	8,127		-
Economizer	259,972	24,152		-	55,568	5,162
Total	395,937	36,784	91,583	8,508	55,568	5,162
	lb/hr	kg/hr	lb/hr	kg/hr	MMBtu/hr	kW
Capacity	146,323	66,371	26,694	12,108	13.59	3,979
	℉	℃	℉	℃	℉	℃
Steam Temp.	982	528	476	247	340	171
Year Built	2011		2011		2011	

Section Description	HRSG Deaerator Tank		HRSG Blowdown Tank			
Certified by:	Vogt Power Int.		Vogt Power Int.			
Serial Number	**17460-1E**		**17460-1D**			
	17460-2E		**17460-2D**			
	psig	barg	psig	barg		
Operating	3	0.2	50	3.4		
MAWP**	100	6.9	-			
	℉	℃	℉	℃		
MDMT	40	4	40	4		
Capacity						
	℉	℃				
Water Temp	221	105				
Year Built	2011		2011			

*Per ASME Section I Code Interpretation I-89-68 **Per ASME Section VIII

6. HP Section

Section Name	HPSH1	HPSH2	HPSH3	HPEV1	HPEV2	HPEV3
Heating Surface, sq. ft	8435	11930	11930	14810	22215	22215
Effective length of Tubes, ft	50	50	50	50	50	50
Number of Tubes/row	29	29	29	36	36	36
Number of passes/module	1.00	1.00	1.00	1.00	1.00	1.00
Number of Rows	2	2	2	2	3	3
Tube O.D., in	1.5	1.5	1.5	1.5	1.5	1.5
Tube Min Wall, in	0.160	0.118	0.105	0.105	0.105	0.105
Tube Material	SA-213 T22	SA-213 T22	SA-213 T11	SA-178 A	SA-178 A	SA-178 A
Fin Type (0/1/2, bare/solid/ser.)	1	2	2	2	2	2
Fins per inch	6.8	7.3	7.3	7.3	7.3	7.3
Fin Height, in	0.375	0.5	0.5	0.5	0.5	0.5
Fin Thickness, in	0.04	0.04	0.04	0.04	0.04	0.04
Fin Material	T409	T409	T409	CS	CS	CS
ModA Outlet Hdr. O.D., in	8.625	8.625	8.625	8.625	8.625	8.625
ModA Outlet Hdr. Thick., in	1.000	0.875	0.718	0.593	0.593	0.593
ModA Outlet Hdr. Material	SA-335 P22	SA-335 P22	SA-335 P11	SA-106 C	SA-106 C	SA-106 C
ModA Inlet Hdr. O.D., in	8.625	8.625	8.625	8.625	8.625	8.625
ModA Inlet Hdr. Thick., in	1.000	0.875	0.718	0.593	0.593	0.593
ModA Inlet Hdr. Material	SA-335 P22	SA-335 P22	SA-335 P11	SA-106 C	SA-106 C	SA-106 C
ModA Rows	2	2	2	2	3	3
Number of ModA	1	1	1	1	1	1
Module Layout Pattern	2	2	2	2	3	3
Design Pressure, psig	1300	1300	1300	1340	1340	1340
Transverse Pitch, in	4.0000	4.0000	4.0000	3.2500	3.2500	3.2500
Longitudinal Pitch, in	4.5000	4.5000	4.5000	4.5000	2.8750	2.8750
Box #	1	1	1	1	1	1
Rows in Current Box	2	2	2	2	3	3

Section Name	HPEV4	HPEV5	HPEC1	HPEC2	HPEC3	HPEC4
Heating Surface, sq. ft	22215	22215	14810	22215	22215	14810
Effective length of Tubes, ft	50	50	50	50	50	50
Number of Tubes/row	36	36	36	36	36	36
Number of passes/module	1.00	1.00	3.00	5.00	5.00	5.00
Number of Rows	3	3	2	3	3	2
Tube O.D., in	1.5	1.5	1.5	1.5	1.5	1.5
Tube Min Wall, in	0.105	0.105	0.105	0.105	0.105	0.105
Tube Material	SA-178 A	SA-178 A	SA-178 A	SA-178 A	SA-178 A	SA-178 A
Fin Type (0/1/2, bare/solid/ser.)	2	2	2	2	2	2
Fins per inch	7.3	7.3	7.3	7.3	7.3	7.3
Fin Height, in	0.5	0.5	0.5	0.5	0.5	0.5
Fin Thickness, in	0.04	0.04	0.04	0.04	0.04	0.04
Fin Material	CS	CS	CS	CS	CS	CS
ModA Outlet Hdr. O.D., in	8.625	8.625	8.625	8.625	8.625	8.625
ModA Outlet Hdr. Thick., in	0.593	0.593	0.593	0.593	0.593	0.593
ModA Outlet Hdr. Material	SA-106 C	SA-106 C	SA-106 C	SA-106 C	SA-106 C	SA-106 C
ModA Inlet Hdr. O.D., in	8.625	8.625	8.625	8.625	8.625	8.625
ModA Inlet Hdr. Thick., in	0.593	0.593	0.593	0.593	0.593	0.593
ModA Inlet Hdr. Material	SA-106 C	SA-106 C	SA-106 C	SA-106 C	SA-106 C	SA-106 C
ModA Rows	3	3	2	3	3	2
Number of ModA	1	1	1	1	1	1
Module Layout Pattern	3	3	2	3	3	2
Design Pressure, psig	1340	1340	1435	1435	1435	1435
Transverse Pitch, in	3.2500	3.2500	3.2500	3.2500	3.2500	3.2500
Longitudinal Pitch, in	2.8750	2.8750	4.5000	2.8750	2.8750	4.5000
Box #	1	1	1	1	2	2
Rows in Current Box	3	3	2	3	3	2

Fin Segment Width, in (for all)	0.1575
Fin Root Height, in (for all)	0.2500

6. HP Section (cont.)

Section Name	HPEC5	HPEC6	HPEC7	HPEC8	HPEC9	HPECA
Heating Surface, sq. ft	22215	8202	22215	22215	22215	22215
Effective length of Tubes, ft	50	50	50	50	50	50
Number of Tubes/row	36	36	36	36	36	36
Number of passes/module	5.00	5.00	5.00	5.00	5.00	5.00
Number of Rows	3	2	3	3	3	3
Tube O.D., in	1.5	1.5	1.5	1.5	1.5	1.5
Tube Min Wall, in	0.105	0.105	0.105	0.105	0.105	0.105
Tube Material	SA-178 A	SA-178 A	SA-178 A	SA-178 A	SA-178 A	SA-178 A
Fin Type (0/1/2, bare/solid/ser.)	2	1	2	2	2	2
Fins per inch	7.3	5.1	7.3	7.3	7.3	7.3
Fin Height, in	0.5	0.375	0.5	0.5	0.5	0.5
Fin Thickness, in	0.04	0.04	0.04	0.04	0.04	0.04
Fin Material	CS	CS	CS	CS	CS	CS
ModA Outlet Hdr. O.D., in	8.625	8.625	8.625	8.625	8.625	8.625
ModA Outlet Hdr. Thick., in	0.593	0.593	0.593	0.593	0.593	0.593
ModA Outlet Hdr. Material	SA-106 C	SA-106 C	SA-106 C	SA-106 C	SA-106 C	SA-106 C
ModA Inlet Hdr. O.D., in	8.625	8.625	8.625	8.625	8.625	8.625
ModA Inlet Hdr. Thick., in	0.593	0.593	0.593	0.593	0.593	0.593
ModA Inlet Hdr. Material	SA-106 C	SA-106 C	SA-106 C	SA-106 C	SA-106 C	SA-106 C
ModA Rows	3	2	3	3	3	3
Number of ModA	1	1	1	1	1	1
Module Layout Pattern	3	2	3	3	3	3
Design Pressure, psig	1435	1435	1435	1435	1435	1435
Transverse Pitch, in	3.2500	3.2500	3.2500	3.2500	3.2500	3.2500
Longitudinal Pitch, in	2.8750	4.5000	2.8750	2.8750	2.8750	2.8750
Box #	2	2	2	3	3	3
Rows in Current Box	3	2	3	3	3	3

Section Name	HPECB	HPECC	HPECD			
Heating Surface, sq. ft	22215	22215	22215			
Effective length of Tubes, ft	50	50	50			
Number of Tubes/row	36	36	36			
Number of passes/module	5.00	5.00	5.00			
Number of Rows	3	3	3			
Tube O.D., in	1.5	1.5	1.5			
Tube Min Wall, in	0.105	0.105	0.105			
Tube Material	SA-178 A	SA-178 A	SA-178 A			
Fin Type (0/1/2, bare/solid/ser.)	2	2	2			
Fins per inch	7.3	7.3	7.3			
Fin Height, in	0.5	0.5	0.5			
Fin Thickness, in	0.04	0.04	0.04			
Fin Material	CS	CS	CS			
ModA Outlet Hdr. O.D., in	8.625	8.625	8.625			
ModA Outlet Hdr. Thick., in	0.593	0.593	0.593			
ModA Outlet Hdr. Material	SA-106 C	SA-106 C	SA-106 C			
ModA Inlet Hdr. O.D., in	8.625	8.625	8.625			
ModA Inlet Hdr. Thick., in	0.593	0.593	0.593			
ModA Inlet Hdr. Material	SA-106 C	SA-106 C	SA-106 C			
ModA Rows	3	3	3			
Number of ModA	1	1	1			
Module Layout Pattern	3	3	3			
Design Pressure, psig	1435	1435	1435			
Transverse Pitch, in	3.2500	3.2500	3.2500			
Longitudinal Pitch, in	2.8750	2.8750	2.8750			
Box #	3	3	3			
Rows in Current Box	3	3	3			

Fin Segment Width, in (for all)	0.1575
Fin Root Height, in (for all)	0.2500

6. HP Section

Section Name	HPSH1	HPSH2	HPSH3	HPEV1	HPEV2	HPEV3
Heating Surface, sq. M	784	1108	1108	1376	2064	2064
Effective length of Tubes, M	15.2	15.2	15.2	15.2	15.2	15.2
Number of Tubes/row	29	29	29	36	36	36
Number of passes/module	1	1	1	1	1	1
Number of Rows	2	2	2	2	3	3
Tube O.D., mm	38.1	38.1	38.1	38.1	38.1	38.1
Tube Min Wall, mm	4.1	3.0	2.7	2.7	2.7	2.7
Tube Material	SA-213 T22	SA-213 T22	SA-213 T11	SA-178 A	SA-178 A	SA-178 A
Fin Type (0/1/2, bare/solid/ser.)	1	2	2	2	2	2
Fins per M	268	287	287	287	287	287
Fin Height, mm	9.5	12.7	12.7	12.7	12.7	12.7
Fin Thickness, mm	1.0	1.0	1.0	1.0	1.0	1.0
Fin Material	T409	T409	T409	CS	CS	CS
ModA Outlet Hdr. O.D., mm	219.1	219.1	219.1	219.1	219.1	219.1
ModA Outlet Hdr. Thick., mm	25.4	22.2	18.2	15.1	15.1	15.1
ModA Outlet Hdr. Material	SA-335 P22	SA-335 P22	SA-335 P11	SA-106 C	SA-106 C	SA-106 C
ModA Inlet Hdr. O.D., mm	219.1	219.1	219.1	219.1	219.1	219.1
ModA Inlet Hdr. Thick., mm	25.4	22.2	18.2	15.1	15.1	15.1
ModA Inlet Hdr. Material	SA-335 P22	SA-335 P22	SA-335 P11	SA-106 C	SA-106 C	SA-106 C
ModA Rows	2	2	2	2	3	3
Number of ModA	1	1	1	1	1	1
Module Layout Pattern	2	2	2	2	3	3
Design Pressure, barg	90	90	90	92	92	92
Transverse Pitch, mm	101.6	101.6	101.6	82.6	82.6	82.6
Longitudinal Pitch, mm	114.3	114.3	114.3	114.3	73.0	73.0
Box #	1	1	1	1	1	1
Rows in Current Box	2	2	2	2	3	3

Section Name	HPEV4	HPEV5	HPEC1	HPEC2	HPEC3	HPEC4
Heating Surface, sq. M	2064	2064	1376	2064	2064	1376
Effective length of Tubes, M	15.2	15.2	15.2	15.2	15.2	15.2
Number of Tubes/row	36	36	36	36	36	36
Number of passes/module	1	1	3	5	5	5
Number of Rows	3	3	2	3	3	2
Tube O.D., mm	38.1	38.1	38.1	38.1	38.1	38.1
Tube Min Wall, mm	2.7	2.7	2.7	2.7	2.7	2.7
Tube Material	SA-178 A	SA-178 A	SA-178 A	SA-178 A	SA-178 A	SA-178 A
Fin Type (0/1/2, bare/solid/ser.)	2	2	2	2	2	2
Fins per M	287	287	287	287	287	287
Fin Height, mm	12.7	12.7	12.7	12.7	12.7	12.7
Fin Thickness, mm	1.0	1.0	1.0	1.0	1.0	1.0
Fin Material	CS	CS	CS	CS	CS	CS
ModA Outlet Hdr. O.D., mm	219.1	219.1	219.1	219.1	219.1	219.1
ModA Outlet Hdr. Thick., mm	15.1	15.1	15.1	15.1	15.1	15.1
ModA Outlet Hdr. Material	SA-106 C	SA-106 C	SA-106 C	SA-106 C	SA-106 C	SA-106 C
ModA Inlet Hdr. O.D., mm	219.1	219.1	219.1	219.1	219.1	219.1
ModA Inlet Hdr. Thick., mm	15.1	15.1	15.1	15.1	15.1	15.1
ModA Inlet Hdr. Material	SA-106 C	SA-106 C	SA-106 C	SA-106 C	SA-106 C	SA-106 C
ModA Rows	3	3	2	3	3	2
Number of ModA	1	1	1	1	1	1
Module Layout Pattern	3	3	2	3	3	2
Design Pressure, barg	92	92	99	99	99	99
Transverse Pitch, mm	82.6	82.6	82.6	82.6	82.6	82.6
Longitudinal Pitch, mm	73.0	73.0	114.3	73.0	73.0	114.3
Box #	1	1	1	1	2	2
Rows in Current Box	3	3	2	3	3	2

Fin Segment Width, mm (for all)	4.0
Fin Root Height, mm (for all)	6.4

6. HP Section (cont.)

Section Name	HPEC5	HPEC6	HPEC7	HPEC8	HPEC9	HPECA
Heating Surface, sq. M	2064	762	2064	2064	2064	2064
Effective length of Tubes, M	15.2	15.2	15.2	15.2	15.2	15.2
Number of Tubes/row	36	36	36	36	36	36
Number of passes/module	5	5	5	5	5	5
Number of Rows	3	2	3	3	3	3
Tube O.D., mm	38.1	38.1	38.1	38.1	38.1	38.1
Tube Min Wall, mm	2.7	2.7	2.7	2.7	2.7	2.7
Tube Material	SA-178 A	SA-178 A	SA-178 A	SA-178 A	SA-178 A	SA-178 A
Fin Type (0/1/2, bare/solid/ser.)	2	1	2	2	2	2
Fins per M	287	201	287	287	287	287
Fin Height, mm	12.7	9.5	12.7	12.7	12.7	12.7
Fin Thickness, mm	1.0	1.0	1.0	1.0	1.0	1.0
Fin Material	CS	CS	CS	CS	CS	CS
ModA Outlet Hdr. O.D., mm	219.1	219.1	219.1	219.1	219.1	219.1
ModA Outlet Hdr. Thick., mm	15.1	15.1	15.1	15.1	15.1	15.1
ModA Outlet Hdr. Material	SA-106 C	SA-106 C	SA-106 C	SA-106 C	SA-106 C	SA-106 C
ModA Inlet Hdr. O.D., mm	219.1	219.1	219.1	219.1	219.1	219.1
ModA Inlet Hdr. Thick., mm	15.1	15.1	15.1	15.1	15.1	15.1
ModA Inlet Hdr. Material	SA-106 C	SA-106 C	SA-106 C	SA-106 C	SA-106 C	SA-106 C
ModA Rows	3	2	3	3	3	3
Number of ModA	1	1	1	1	1	1
Module Layout Pattern	3	2	3	3	3	3
Design Pressure, barg	99	99	99	99	99	99
Transverse Pitch, mm	82.6	82.6	82.6	82.6	82.6	82.6
Longitudinal Pitch, mm	73.0	114.3	73.0	73.0	73.0	73.0
Box #	2	2	2	3	3	3
Rows in Current Box	3	2	3	3	3	3

Section Name	HPECB	HPECC	HPECD			
Heating Surface, sq. M	2064	2064	2064			
Effective length of Tubes, M	15.2	15.2	15.2			
Number of Tubes/row	36	36	36			
Number of passes/module	5	5	5			
Number of Rows	3	3	3			
Tube O.D., mm	38.1	38.1	38.1			
Tube Min Wall, mm	2.7	2.7	2.7			
Tube Material	SA-178 A	SA-178 A	SA-178 A			
Fin Type (0/1/2, bare/solid/ser.)	2	2	2			
Fins per M	287	287	287			
Fin Height, mm	12.7	12.7	12.7			
Fin Thickness, mm	1.0	1.0	1.0			
Fin Material	CS	CS	CS			
ModA Outlet Hdr. O.D., mm	219.1	219.1	219.1			
ModA Outlet Hdr. Thick., mm	15.1	15.1	15.1			
ModA Outlet Hdr. Material	SA-106 C	SA-106 C	SA-106 C			
ModA Inlet Hdr. O.D., mm	219.1	219.1	219.1			
ModA Inlet Hdr. Thick., mm	15.1	15.1	15.1			
ModA Inlet Hdr. Material	SA-106 C	SA-106 C	SA-106 C			
ModA Rows	3	3	3			
Number of ModA	1	1	1			
Module Layout Pattern	3	3	3			
Design Pressure, barg	99	99	99			
Transverse Pitch, mm	82.6	82.6	82.6			
Longitudinal Pitch, mm	73.0	73.0	73.0			
Box #	3	3	3			
Rows in Current Box	3	3	3			

Fin Segment Width, mm (for all)	4.0
Fin Root Height, mm (for all)	6.4

7. LP Section

Section Name	LPSH1	LPEV1	LPEV2	LPEV3	LPEV4	LPEC1
Heating Surface, sq. ft	4101	20837	22215	22215	22215	11138
Effective length of Tubes, ft	50	50	50	50	50	50
Number of Tubes/row	36	36	36	36	36	36
Number of passes/module	1.00	1.00	1.00	1.00	1.00	6.00
Number of Rows	1	3	3	3	3	2
Tube O.D., in	1.5	1.5	1.5	1.5	1.5	1.5
Tube Min Wall, in	0.105	0.105	0.105	0.105	0.105	0.105
Tube Material	SA-178 A	SA-178 A	SA-178 A	SA-178 A	SA-178 A	SA-178 A
Fin Type (0/1/2, bare/solid/ser.)	1	2	2	2	2	1
Fins per inch	5.1	6.8	7.3	7.3	7.3	7.3
Fin Height, in	0.375	0.5	0.5	0.5	0.5	0.375
Fin Thickness, in	0.04	0.04	0.04	0.04	0.04	0.04
Fin Material	CS	CS	CS	CS	CS	CS
ModA Outlet Hdr. O.D., in	8.625	8.625	8.625	8.625	8.625	8.625
ModA Outlet Hdr. Thick., in	0.406	0.406	0.406	0.406	0.406	0.406
ModA Outlet Hdr. Material	SA-106 B	SA-106 B	SA-106 B	SA-106 B	SA-106 B	SA-106 B
ModA Inlet Hdr. O.D., in	8.625	8.625	8.625	8.625	8.625	8.625
ModA Inlet Hdr. Thick., in	0.406	0.406	0.406	0.406	0.406	0.406
ModA Inlet Hdr. Material	SA-106 B	SA-106 B	SA-106 B	SA-106 B	SA-106 B	SA-106 B
ModA Rows	1	3	3	3	3	2
Number of ModA	1	1	1	1	1	1
Module Layout Pattern	1	3	3	3	3	2
Design Pressure, psig	180	220	220	220	220	425
Transverse Pitch, in	3.2500	3.2500	3.2500	3.2500	3.2500	3.2500
Longitudinal Pitch, in		2.8750	2.8750	2.8750	2.8750	4.5000
Box #	2	2	2	2	2	3
Rows in Current Box	1	3	3	3	3	2

Section Name	LPEC2	LPEC3	LPEC4	LPEC5	LPEC6	LPEC7
Heating Surface, sq. ft	14810	14810	14810	60012	60012	60012
Effective length of Tubes, ft	50	50	50	66	66	66
Number of Tubes/row	36	36	36	88	88	88
Number of passes/module	6.00	6.00	7.00	3.00	3.00	3.00
Number of Rows	2	2	2	3	3	3
Tube O.D., in	1.5	1.5	1.5	1.5	1.5	1.5
Tube Min Wall, in	0.105	0.105	0.105	0.105	0.105	0.105
Tube Material	SA-178 A	SA-178 A	SA-178 A	SA -192	SA -192	SA -192
Fin Type (0/1/2, bare/solid/ser.)	2	2	2	2	2	2
Fins per inch	7.3	7.3	7.3	6.0	6.0	6.0
Fin Height, in	0.5	0.5	0.5	0.500	0.500	0.500
Fin Thickness, in	0.04	0.04	0.04	0.040	0.040	0.040
Fin Material	CS	CS	CS	CS	CS	CS
ModA Outlet Hdr. O.D., in	8.625	8.625	8.625	8.625	8.625	8.625
ModA Outlet Hdr. Thick., in	0.406	0.406	0.406	0.406	0.406	0.406
ModA Outlet Hdr. Material	SA-106 B	SA-106 B	SA-106 B	SA-106 B	SA-106 B	SA-106 B
ModA Inlet Hdr. O.D., in	8.625	8.625	8.625	8.625	8.625	8.625
ModA Inlet Hdr. Thick., in	0.406	0.406	0.406	0.406	0.406	0.406
ModA Inlet Hdr. Material	SA-106 B	SA-106 B	SA-106 B	SA-106 B	SA-106 B	SA-106 B
ModA Rows	2	2	2	3	3	3
Number of ModA	1	1	1	2	2	2
Module Layout Pattern	2	2	2	3	3	3
Design Pressure, psig	425	425	425	510	510	510
Transverse Pitch, in	3.2500	3.2500	3.2500	3.50	3.50	3.50
Longitudinal Pitch, in	4.5000	4.5000	4.5000	2.875	2.875	2.875
Box #	3	3	3	6	6	6
Rows in Current Box	2	2	2	3	3	3

Fin Segment Width, in (for all)	0.1575
Fin Root Height, in (for all)	0.2500

7. LP Section

Section Name	LPSH1	LPEV1	LPEV2	LPEV3	LPEV4	LPEC1
Heating Surface, sq. M	381	1936	2064	2064	2064	1035
Effective length of Tubes, M	15.2	15.2	15.2	15.2	15.2	15.2
Number of Tubes/row	36	36	36	36	36	36
Number of passes/module	1	1	1	1	1	6
Number of Rows	1	3	3	3	3	2
Tube O.D., mm	38.1	38.1	38.1	38.1	38.1	38.1
Tube Min Wall, mm	2.7	2.7	2.7	2.7	2.7	2.7
Tube Material	SA-178 A	SA-178 A	SA-178 A	SA-178 A	SA-178 A	SA-178 A
Fin Type (0/1/2, bare/solid/ser.)	1	2	2	2	2	1
Fins per M	201	268	287	287	287	287
Fin Height, mm	9.5	12.7	12.7	12.7	12.7	9.5
Fin Thickness, mm	1.0	1.0	1.0	1.0	1.0	1.0
Fin Material	CS	CS	CS	CS	CS	CS
ModA Outlet Hdr. O.D., mm	219.1	219.1	219.1	219.1	219.1	219.1
ModA Outlet Hdr. Thick., mm	10.3	10.3	10.3	10.3	10.3	10.3
ModA Outlet Hdr. Material	SA-106 B	SA-106 B	SA-106 B	SA-106 B	SA-106 B	SA-106 B
ModA Inlet Hdr. O.D., mm	219.1	219.1	219.1	219.1	219.1	219.1
ModA Inlet Hdr. Thick., mm	10.3	10.3	10.3	10.3	10.3	10.3
ModA Inlet Hdr. Material	SA-106 B	SA-106 B	SA-106 B	SA-106 B	SA-106 B	SA-106 B
ModA Rows	1	3	3	3	3	2
Number of ModA	1	1	1	1	1	1
Module Layout Pattern	1	3	3	3	3	2
Design Pressure, barg	12	15	15	15	15	29
Transverse Pitch, mm	82.6	82.6	82.6	82.6	82.6	82.6
Longitudinal Pitch, mm		73.0	73.0	73.0	73.0	114.3
Box #	2	2	2	2	2	3
Rows in Current Box	1	3	3	3	3	2

Section Name	LPEC2	LPEC3	LPEC4	LPEC5	LPEC6	LPEC7
Heating Surface, sq. M	1376	1376	1376	5575	5575	5575
Effective length of Tubes, M	15.2	15.2	15.2	20.1	20.1	20.1
Number of Tubes/row	88	36	36	88	88	88
Number of passes/module	6	6	7	3	3	3
Number of Rows	2	2	2	3	3	3
Tube O.D., mm	38.1	38.1	38.1	38.1	38.1	38.1
Tube Min Wall, mm	2.7	2.7	2.7	2.7	2.7	2.7
Tube Material	SA-178 A	SA-178 A	SA-178 A	SA -192	SA -192	SA -192
Fin Type (0/1/2, bare/solid/ser.)	2	2	2	2	2	2
Fins per M	287	287	287	236	236	236
Fin Height, mm	12.7	12.7	12.7	12.7	12.7	12.7
Fin Thickness, mm	1.0	1.0	1.0	1.0	1.0	1.0
Fin Material	CS	CS	CS	CS	CS	CS
ModA Outlet Hdr. O.D., mm	219.1	219.1	219.1	219.1	219.1	219.1
ModA Outlet Hdr. Thick., mm	10.3	10.3	10.3	10.3	10.3	10.3
ModA Outlet Hdr. Material	SA-106 B	SA-106 B	SA-106 B	SA-106 B	SA-106 B	SA-106 B
ModA Inlet Hdr. O.D., mm	219.1	219.1	219.1	219.1	219.1	219.1
ModA Inlet Hdr. Thick., mm	10.3	10.3	10.3	10.3	10.3	10.3
ModA Inlet Hdr. Material	SA-106 B	SA-106 B	SA-106 B	SA-106 B	SA-106 B	SA-106 B
ModA Rows	2	2	2	3	3	3
Number of ModA	1	1	1	2	2	2
Module Layout Pattern	2	2	2	3	3	3
Design Pressure, barg	29	29	29	35	35	35
Transverse Pitch, mm	82.6	82.6	82.6	88.9	88.9	88.9
Longitudinal Pitch, mm	114.3	114.3	114.3	73.0	73.0	73.0
Box #	3	3	3	6	6	6
Rows in Current Box	2	2	2	3	3	3

Fin Segment Width, mm (for all)	4.0
Fin Root Height, mm (for all)	6.4

8. Pressure Relief Valves

Section Description	HP Superheater	HP Drum #1	HP Drum #2 Not Required	LP Superheater
Inlet	2" BW	2 1/2" BW		1.5" 300# RF
Outlet	3" 300# RF	6" 300# RF		2.5" 150# RF
Fluid	Superheated Steam	Saturated Steam		Superheated Steam
	psig barg	psig barg		psig barg
Set Pressure	1235 85.2	1300 89.6		160 11.0
	lb/hr kg/hr	lb/hr kg/hr		lb/hr kg/hr
Actual Relieving Capacity	55,421 25,138	110,603 50,168		6,096 2,765
Mark No.	**21**HAH10 AA401 **22**HAH10 AA401	**21**HAD10 AA401 **22**HAD10 AA401		**21**HAH50 AA401 **22**HAH50 AA401

Section Description	LP Drum #1	LP Drum #2	LP Feedwater	External Deaerator
Inlet	1.5" 300# RF	1.5" 300# RF	2" 300# RF	6" 600# RF
Outlet	2.5" 150# RF	2.5" 150# RF	3" 150# RF	8" 150# RF
Fluid	Saturated Steam	Saturated Steam	Water	Saturated Steam
	psig barg	psig barg	psig barg	psig barg
Set Pressure	174 12.0	185 12.8	425 29.3	100 6.9
	lb/hr kg/hr	lb/hr kg/hr	lb/hr kg/hr	lb/hr kg/hr
Actual Relieving Capacity	11,272 5,113	11,930 5,411	18,098 8,209	65,195 29,572
Mark No.	**21**HAD50 AA401 **22**HAD50 AA401	**21**HAD50 AA402 **22**HAD50 AA402	**21**LAB50 AA401 **22**LAB50 AA401	0**2**LAA10 AA401

2.0 SYSTEM DESIGN DESCRIPTION

2.1 HRSG FUNCTION

The function of the Heat Recovery Steam Generator (HRSG) system is to extract sensible heat from a gas turbine (GT) exhaust gas stream. The extracted sensible heat is converted into usable steam by the heat transfer surface within the HRSG. The usable steam is generated in two pressure levels for use in a steam turbine - generator set. These two pressure levels will be referred to as the high pressure (HP) and low pressure (LP) systems.

All heat transfer surfaces used consist of Vogt Power modular type construction (See Figure 2.1 Steam Generator Circuit). Up to three rows of vertical finned tubes are welded into a pipe header at the top and bottom to form a modular unit.

During normal operation, the steam produced in the HP section will be admitted to the HP casing of the steam turbine. The superheated LP steam is added to the exhaust of the HP steam turbine section where it is admitted to the LP section of the steam turbine.

2.2 NATURAL CIRCULATION

The different sections of transfer surfaces are located in such a manner as to provide for maximum temperature differential between the declining exhaust gas temperature and the increasing temperature of the steam and/or water inside the heat transfer surfaces. A typical example of a steam generator circuit gas side and water side temperature profile is shown on Figure 2.2. See the setting drawings referenced in Tab 1 of this section for the details of the HRSG heat transfer surface arrangement.

Each evaporator circulation loop (See Figure 2.3, Typical HRSG Circulation Loop) consists of a steam drum, downcomers, feeder headers, feeder pipes, modules, and riser pipes. This creates a natural circulation effect with water continuously moving within the boiler tubes to remove and replace the generated steam. In a natural circulation system, circulation increases with increased heat input until a point of maximum fluid flow is reached (See Figure 2.4).

Natural circulation is based on the difference in density between water and steam. Water is supplied from the drum to the bottom of the units through the downcomer assemblies and feeder pipes. As the tubes absorb heat, a steam/water mixture is generated in the module tubes. The steam/water mixture in the tubes is less dense than the water in the downcomers (See Figure 2.5) and rises up to the steam drum. The downcomers continuously provide cooler, heavier water to the bottom of the

heating surface, which becomes less dense and rises as steam bubbles form, and so on. The circulation process continues with a steam/water mixture generated in the tubes rising to the drum and then being replaced with heavier water from the downcomers.

Note that the evaporator tubes are never full of steam, containing either water or a steam/water mix. This cools the metal of the tubes and prevents overheating.

As more heat is added to the boiler tubes, the steam quality (or percentage of steam) of the fluid increases. Since the density difference becomes greater, more "driving head" is available from the natural circulation effect. Up to a point, circulation will naturally increase with increased heat input and cause increased flow to keep the boiler tubes cooled as more steam is generated. Beyond a certain level, friction in the tubes can overcome the difference in density, reducing circulation with additional heat input as shown in Figure 2.4. Natural circulation boilers are designed to operate in the left region of the curve, where there will always be adequate circulation to maintain tube wall temperatures within permissible limits.

Natural circulation also partially compensates for normal imbalances in the heat input to the boiler tubes. As shown in the left portion of Figure 2.4, if one tube receives more heat than adjacent tubes, it will generate more cooling flow. However, if the heat imbalance becomes too great, flow will be reduced due to friction and the tube will overheat.

Steam quality leaving the riser tubes and entering the steam drum is generally 2% to 10% by design, depending on the boiler load and operating pressure. This means that between 2% and 10% of the water from the downcomers will be converted to steam by the time it reaches the top of the module tubes. This low steam quality is necessary to limit the heat flux through the tube wall, which protects the tubes from overheat failures. See Figure 2.6 Metal Temperatures versus Steam Quality.

2.3 HRSG SUBSYSTEMS

The module units are shop assembled into transportable box assemblies with each box containing a number of individual modules and associated components. Each HRSG unit consists of three (3) boxes in series. A spool duct installed between boxes 1 and 2, and boxes 2 and 3 allows for inspection access.

The HRSG is composed of the following subsystems:

1. Setting
2. Low Pressure System

3. High Pressure System
4. Deaerator System
5. Blowdown System
6. Diverter Damper

The Mechanical Design Requirements of the HRSG System can be found in the following contract documents:

Heating Surface Data and Design Conditions	V17460-SENF-001, "General Notes and Data"
Piping Design Conditions	V17460-ICNA-001, "Line List"
Valve Design Conditions	V17460-ICNA-003, "Valve List"
Process Design Conditions	V17460-ICNA-002, "Terminal Point List"
Instrument Requirements	V17460-ICNA-004, "Instrument List"

It should be noted that design temperature for individual system components vary as internal water temperatures vary through the heat transfer surfaces or sections, as allowed by ASME Section I Boiler Code. Also, design pressures and temperatures for piping systems vary with the requirements of ASME B31.1 or ASME Section 1, as applicable.

2.4 HRSG SETTING

The Setting provides GT exhaust gas containment ductwork; encasement of the various heat recovery module units; access to equipment via platform, ladder and stair system; duct expansion joints, casing penetration seals, and the exhaust stack. The HRSG setting includes ductwork transitions for connections with the GT Exhaust and the HRSG Module Boxes. See Document V17460-SENF-001 for insulation details.

2.4.1 DUCTWORK AND CASING (Inlet Duct, Box and Field Casing)

The casing and ductwork sections are fabricated of ASTM A-36 carbon steels (or equivalent), and reinforced on the exterior with carbon steel sections to withstand the specified internal design pressure, wind load, and seismic load. Some 50 ksi steels may be used in the HRSG structure, primarily for the main HRSG columns.

Construction is all welded and gas tight to prevent external gas leakage, including both shop and field joints.

All ductwork sections are internally lined with multiple layers of ceramic fiber insulation (8 lb. density) covered with stainless steel or carbon steel liner panels to reduce heat transfer from the GT exhaust gas to the exterior surfaces. This ductwork design is referred to as a “cold casing design”. The advantages to the design are that expansion of the ductwork is minimized and the insulation is not exposed to the ambient environment.

Liner panels are attached to the ductwork with 1/2” (12mm) or 3/8" (9mm) diameter studs welded to the inside surfaces of the ductwork. The studs vary in material depending on their operating conditions. Refer to V17460-SENF-001 for details. The liner panels are designed to provide for differential expansion between the hot interior and the cold external casing.

The expansion joint between the GT exhaust and the inlet duct and the expansion joint between the gas outlet of the LP Economizer (in Box 3) and the stack are provided by Vogt Power. Access doors are provided for entry into various sections of the HRSG including the inlet duct and the stack. The hinged access doors are equipped with grab bars at the top of the doors to assist in entry. Insulation is provided for the inside of the doors where elevated temperatures are encountered. Removable panel doors are also provided in the top and bottom of the boxes for entry into the “attic” and “basement” areas of the module boxes.

2.4.2 OUTLET STACK

The outlet stack is an all welded, free standing, self-supported, uninsulated, A-36 carbon steel structure. The stack is connected to the outlet of Box 3 by the uninsulated outlet duct and an uninsulated expansion joint. The stack is equipped with EPA test ports, CEMS test ports and aircraft warning lights. All of these items are accessible by the ladder and platform system supplied.

2.4.3 PLATFORMS, LADDERS AND STAIRS

Platforms, stairways and/or ladders are provided for where required for access to the HRSG and its subsystems. These platforms and stairways provide access to the upper levels of the HRSG, the safety valves, the stack ports, and all other valves and instrumentation. Platform grating and stair treads are open bar type grating with pipe handrails.

2.4.4 CASING EXPANSION JOINTS

The HRSG outlet expansion joint is a “hot-to-hot” flange design which means it attaches to two uninsulated pieces of equipment. The gas seal is performed by a multi-layer fabric belt, which is clamped to the frame by a series of bolts and backing bars which provide the sealing pressure to the edge of fabric around the entire periphery of the belt.

The inlet duct expansion joint is a “cold-to-cold” insulated joint. The gas seal is created by multi-layer fabric belts clamped to the frame by a series of bolts and backing bars which provide the sealing pressure to the edge of fabric around the entire periphery of the belt. The joint is internally insulated with an internal stainless steel liner integral to the internal lining of the inlet duct.

2.4.5 CASING PENETRATIONS

Piping and hanger rods which penetrate the casing are sealed by a bellows type metallic expansion joint. Each bellows has been specifically designed / selected for the predicted thermal differential movements between the pipe or hanger and the casing.

2.6 LOW PRESSURE SYSTEM

The LP section includes an economizer (LPEC), evaporator (LPEV) and superheater (LPSH). The LP system flow path is from the economizer to the steam drum/evaporator and finally to the superheater. The location of these heat transfer surfaces may be found on the Right Side Section drawing V17460-SEND-001.

The LP system is equipped with four safety relief valves, one mounted on the economizer inlet piping, two mounted on top of the drum, and one mounted vertically on the LP main steam outlet. In an over-pressure situation, the LP superheater SRV will lift first. As the pressure continues to build, the LP drum SRVs will lift in series (lowest set pressure first). These three SRVs are designed to relieve 100% of the total LP steam generating capacity as required by ASME Section I for personnel and equipment protection. The steam safety valves exhaust into steam silencers to minimize the noise released during this event. The safety valve on the economizer inlet will lift in the event of an over-pressure situation, either due to heat migration during shut down, or due to high pump pressure.

2.6.1 LOW PRESSURE ECONOMIZER (LPEC)

The LP economizer consists of four rows of tubes divided between two modules. Each module has multiple passes on the water side. This is accomplished by internal baffles in the upper and lower headers. The LP economizer modules are all top supported with module crossovers located in the top and bottom casing cavities ("attic" and "basement"). The location of these heat transfer surfaces may be found on the Right Side Section drawing V17460-SEND-001.

The LP economizer receives feedwater from the condensate pump and discharges to the LP drum.

The LP economizer section contains vents and drains as required by the ASME Code and good practice. The LP economizer vents are used primarily for maintenance (hydro testing and filling) to vent trapped air from the upper headers. They discharge to the LP drum. The LP economizer drains are used for maintenance (flushing the economizer section free of construction sediment during boiler cleaning and system draining for maintenance or freeze protection if out of service).

The LP economizer is equipped with a pressure safety valve (PSV) mounted vertically on top of the inlet piping as required by ASME Section I. The PSV is designed to relieve 100% of the total LP economizer generating capacity as required by Section I of the ASME Code for protection of personnel and equipment.

2.6.2 LOW PRESSURE STEAM DRUM and EVAPORATOR (LPEV)

The LP evaporator section consists of twelve rows of tubes, divided between four modules. The modules are all single pass with no internal baffles in the headers, fed in parallel. The location of these heat transfer surfaces may be found on the Right Side Section drawing V17460-SEND-001.

The LP steam drum receives feedwater from the LP economizer and mixes it with the drum water. The drum water is fed to the bottom of the LP evaporator modules. In the LP evaporator section, the water phase change between liquid and steam occurs as described above in paragraph 2.2. The steam water mixture is discharged through the riser pipes into the LP drum beneath the water level, and is directed by internal baffles above normal water level (NWL) for steam/water mixture separation(See Figure 2.7 for typical drum internal layout). The separated steam from the steam/water mixture travels upward through final stage separators ("scrubbers") to steam supply lines that feed the LP superheater.

The downcomer inlets are equipped with vortex breakers which disrupt the swirling motion of the water flow from the drum and into the downcomer. These are required

to prevent a vortex from forming and drawing steam bubbles and/or surface impurities into the downcomers. The downcomers are also covered with a mesh screen to prevent the loss of materials during inspection and maintenance.

The lower downcomer crossover header located at the bottom of the system contains the intermittent blowdown (IBD) connections. In addition, inspection access is provided to these headers with flanged hand holes.

The intermittent blowdown (IBD) is designed to remove any sludge or contaminates formed in the LP evaporator water and to maintain boiler water chemistry within limits as shown in Section I, Tab 8. Section I, Tab 9 provides additional steam purity requirements for the steam generators.

During normal operation, feedwater is constantly added to the drum as steam is removed. The impurities in the feedwater will concentrate and remain in the drum water. If not removed, the drum water solids concentration will increase, which will eventually cause the formation of scale. The formation of scale on tube surfaces reduces heat transfer and can lead to overheating and possible tube failures. A continuous blow down line is provided to maintain boiler water solids at recommended limits. The continuous blow down is designed for continuous operation, removing a small portion of drum water to keep the system in balance. The continuous blowdown is routed to the blowdown tank.

The steam drum internals also include a chemical feed line for water treatment. Internal boiler water treatment is achieved by injecting chemicals (consult a water treatment expert) through the chemical feed line into the steam drum. The chemical feed line discharges into a turbulent zone of the drum for thorough mixing with the boiler water before the water enters the downcomers. The continuous blow down and chemical feed lines are separated so that injection chemicals do not flow directly to the blow down line.

The drum water level must be within design limits during operation, and must be properly indicated to the operator. For this reason, the LP steam drum includes one water level gauge, three level transmitters, and probe-type level indicator with independent indication in the control room. These items are strategically positioned on the drum heads to assure accurate measurement of the water level in the steam drum.

NOTE: See Section 2.8 for further details on Level Equipment.

A pressure indicator is supplied on the lLP steam drum as required by the ASME Code. Each drum head includes a 14"x18" elliptical manway at each end. The

drum shell contains the connections for the pressure safety relief valves, vents, pressure indicators, level transmitters, level gauges, nitrogen blanketing, downcomers, and riser connections.

2.6.3 LOW PRESSURE SUPERHEATER (LPSH)

The LPSH consists of one row of tubes in a single module. The LPSH has one pass on the steam side, with no baffles in the headers. The location of this heat transfer surfaces may be found on the Right Side Section drawing V17460-SEND-001.

The LP superheater receives steam from the LP steam drum and heats it from saturation to the design superheat temperature. Steam leaving the LPSH is injected into the low pressure section of the steam turbine.

The LPSH modules are designed as drainable superheaters. The LP superheater drains are used for the removal of condensate formed during the purge portion of HOT or WARM start ups, and for draining of hydro water and draining/flushing during chemical cleaning.

2.7 HIGH PRESSURE SYSTEM

The HP System is composed of an economizer (HPEC), evaporator (HPEV), and superheater (HPSH). The HP system flow path is from the economizer to the steam drum/evaporator and finally to the superheater. The location of these heat transfer surfaces may be found on the Right Side Section drawing V17460-SEND-001.

The HP system is equipped with 2 safety relief valves, one mounted on top of the drum, and one mounted vertically on the HP main steam outlet. In an over-pressure situation, the HP superheater SRV will lift first. As the pressure continues to build, the HP drum SRV will lift. The two SRV's are designed to relieve 100% of the total HP steam generating capacity. The steam safety valves exhaust into steam silencers to minimize the noise released during this event.

2.7.1 HIGH PRESSURE ECONOMIZER (HPEC)

The HP economizer consists of thirty-three rows of tubes divided between thirteen modules. Each module is multi-pass on the water side and single pass on the gas side. This is accomplished by internal baffles in the upper and lower module headers. The location of these heat transfer surfaces may be found on the Right Side Section drawing V17460-SEND-001.

The HP economizer receives feedwater from the boiler feed pumps and discharges to the HP steam drum. The HP economizer feedwater inlet line includes a check valve and a stop valve in accordance with the ASME code.

The HP economizer section is fully vented and drainable. The HP economizer drains are used primarily for maintenance and for flushing the economizer section free of sediment during filling of boiler. The HP economizer vents are used primarily to vent trapped air or flashing steam from the upper headers into the high pressure drum.

Due to sliding pressure operation and partial load operating conditions, a motorized HP economizer vent valve has been located in the HP economizer outlet module (HPEC1). This valve will allow the release of any trapped steam that may form within this module at partial load or off-design operating conditions (low pressure operation) and thus avert any problems due to steaming in the economizer.

2.7.2 HIGH PRESSURE STEAM DRUM and EVAPORATOR (HPEV)

The HP evaporator section consists of fourteen rows of tubes divided between five modules. The modules are all single pass fed in parallel with no internal baffles in the headers. The location of these heat transfer surfaces may be found on the Right Side Section drawing V17460-SEND-001.

The HP steam drum receives the HP economizer outlet feedwater and mixes it with the drum water. The drum water is fed to the bottom of the HP evaporator modules. The steam water mixture is discharged through the riser tubes into the HP drum below the water level, and is directed by internal baffles above normal water level (NWL) for steam/water mixture separation. The separated steam from the steam/water mixture travels upward through final stage separators (“scrubbers”) to steam supply lines that feed the HP superheater. (See Figure 2.7 for typical drum internal layout.)

Saturated steam sampling nozzles are located in selected superheater feeder stub tube in the drum to provide a means of withdrawing a representative portion of saturated steam for subsequent analysis. See Figure 2.8.

The downcomer inlets are equipped with vortex breakers which disrupt the swirling motion of the water flow from the drum and into the downcomer. These are required to prevent a vortex from forming and drawing steam bubbles and/or surface impurities into the downcomer. The downcomers are also covered with a mesh screen to prevent the loss of materials during inspection and maintenance.

The lower feeder headers located at the bottom of the system contain intermittent blow down (IBD) connections. In addition, inspection access is provided to these headers with flanged hand holes.

The High pressure evaporator intermittent blowdown (IBD) is designed to remove any sludge or contaminates formed in the HP evaporator water and to maintain boiler water chemistry within limits as shown in Section I, Tab 8 of this manual. In addition, Section I, Tab 9 provides additional steam purity requirements for the steam generators.

During normal operation, feedwater is constantly added to the drum as steam is removed. The impurities in the feedwater will concentrate and remain in the drum water. If not removed, the drum water solids concentration will increase, which will eventually cause the formation of scale. The formation of scale on tube surfaces reduces heat transfer and can lead to overheating and possible tube failures. A continuous blow down line is provided to maintain boiler water solids at recommended limits. The continuous blow down is designed for continuous operation, removing a small portion of drum water to keep the system in balance. The continuous blowdown is routed to the blowdown tank.

The steam drum internals also include a chemical feed line for water treatment. Internal boiler water treatment is achieved by injecting chemicals (consult a water treatment expert) through the chemical feed line into the steam drum. The chemical feed line discharges into a turbulent zone of the drum for thorough mixing with the boiler water before the water enters the downcomers. The continuous blow down and chemical feed lines are separated so that injection chemicals do not flow directly to the blow down line.

The water level in drum boilers must be within design limits during operation, and must be properly indicated to the operator. For this reason, the HP steam drum includes one water level gauge, three level transmitters, and one probe-type level indicater with independent indication in the control room. These items are strategically positioned on the drum heads to assure accurate measurement of the water level in the steam drum.

NOTE: See Section 2.8 for further details on Level Equipment.

A pressure indicator is supplied on the HP steam drum as required by the ASME Code. Each drum head includes a 14"x18" elliptical manway at each end. The steam drum includes the connections for the pressure safety relief valves, vents, pressure indicators, level transmitters, level gauges, nitrogen blanketing, downcomers, riser connections, continuous blow down, and chemical feed.

2.7.4 HIGH PRESSURE SUPERHEATER (HPSH)

The HP superheater consists of six rows of tubes divided between four modules. Steam is received from the high pressure steam drum at saturated temperature and is heated to final design steam temperature. The location of these heat transfer surfaces may be found on the Right Side Section drawing V17460-SEND-001.

The HP Superheater is equipped with an interstage desuperheater, consisting of a spray nozzle assembly with an integral control valve located in the piping between HPSH2 and HPSH1. The desuperheater is supplied for final steam temperature control. The spray desuperheating process uses water extracted from the HP feed pump discharge line as the cooling media. Final steam temperature control is important for protection of the superheater and equipment downstream of the HRSG (the steam turbine). The desuperheater is designed to limit final steam temperature at the HP superheater outlet to final design steam temperature. It is located to protect the steam turbine from accidental water carry-over.

Temperature sensing elements are located in the HP superheater outlet and are included in the HP superheater desuperheater piping loop. These thermocouples provide indication to control outlet steam temperature and to avoid over cooling the steam to saturation temperature, which will create condensation and introduce liquid water into the superheater.

The HP superheater modules are designed as drainable superheaters. This enables the superheater modules to be completely drained prior to and during start-up. The HP superheater drains are automatic drains used for the removal of condensate formed during the purge portion of HOT or WARM start ups, draining of hydro water and draining/flushing during chemical cleaning. They are also designed for periodic short-term use during HRSG operation. They are routed to the blowdown tank.

The HP superheater modules and outlet header are equipped with vent valves as needed to vent non-condensable gasses at start-up and to release any air pockets during boiler commissioning.

2.8 CONTROL PHILOSOPHY and INSTRUMENTATION

The following paragraphs give a very general overview of the HRSG operating philosophy for certain special loops within the HRSG, including a brief description of the instruments installed. This is intended to give the operator a general understanding of the purpose behind the detailed logic, not to dictate the logic.

For detailed information on HRSG control, reference the HRSG Control Philosophy and the HRSG logics, V17460-ICNF-001, V17460-DENE-001, and V17460-ICND-199 through -382.

The final control logics implemented by the DCS shall be provided by others.

The control philosophy permits the HRSG to follow the GT load and lead the operation of the steam turbine. This is achieved by carefully considering drum level control, the type of fuel being used, and final steam temperature control. Specifically, steam flow in the evaporators varies depending upon energy available in the GT exhaust gas stream. The operator must always bear in mind that the GT load dictates the power output of the steam cycle.

2.8.1 DRUM LEVEL CONTROL DURING PRESSURE / LOAD CHANGES

"Shrink" and "swell" are two terms associated with the effect of changing steam and water specific volume on drum level. Shrink is the decrease in drum water volume that occurs when boiling is suddenly impeded or stopped. Swell is the increase in drum level due to increased boiling resulting from a sudden increase in heat absorption.

Both phenomena occur because the evaporator water contains steam bubbles, which increase both the water volume and the drum level as they form. During steady-state operation, the percentage of steam in the water is stable, resulting in a stable drum level. When boiling stops or suddenly decreases, the volume of steam decreases and the drum level drops – the drum level “shrinks”. When boiling starts or suddenly increases, the volume of steam rises and the drum level “swells”.

Sudden increases in drum pressure will deter boiling and cause shrink, resulting in the drum level dropping suddenly. Sudden decreases in pressure will encourage boiling and cause swell, resulting in a sudden rise in drum pressure. Uncontrolled, either condition can result in an automatic GT load reduction or trip due to drum level.

In addition to changes in load, swell is also a boiler start-up characteristic, as the water level will rise when boiling starts. Because of this the HRSG should be started with a lower drum level than normal, allowing the drum water to reach normal water level (NWL) after the increase in drum water level due to swell. If NWL is exceeded during start up, the intermittent blowdown drain can be used to lower the level, or the GT loading ramp rate can be decreased to manage the water level swell of the

drum. Note that suggested levels for start up are listed in the settings drawings (V17460-SEND-002) and in the HRSG control philosophy (V17460-ICNF-001).

2.8.2 DRUM LEVEL CONTROL

Three element feedwater control loops shall be incorporated in the drum water level control strategies for the HP and LP systems. The three element feedwater control strategy provides a continuous drum water mass balance, calculating every pound of steam or water removed from the evaporator and replacing it with a pound of water from the feedwater system, to maintain a continuous level in the steam drum. The drum level indicated by the level transmitters is then used to trim the signal, opening the control valve if the level drops, closing it if it rises. This is necessary for unmeasured mass losses from the drum, such as continuous blowdown.

Drum level control is critical to boiler operation. Failing to maintain the drum level within normal operating range can lead to improper water separation, resulting in deposits in the superheater tubes which will cause tube overheating and eventual failure. In extreme cases, the evaporator tubes will receive inadequate cooling if the water level drops into the tubes, causing tube overheating and rapid failure. Allowing the water level to drop too far can starve the tubes of cooling water, causing rapid failure.

2.8.3 DESUPERHEATER SPRAY WATER FLOW

The HP superheater has sufficient heating surface to produce the required final steam temperature at the design condition for natural gas firing in the GT. However, the GT exhaust conditions will vary with ambient conditions and load. At these off design conditions, the heating surface may produce a higher than needed final steam temperature.

An interstage desuperheater is used to reduce the final steam temperature. The desuperheater lowers final steam temperature by lowering the steam temperature at a middle stage of the superheater surface (“interstage”). This is accomplished by injecting cold feedwater, causing a slight increase in steam flow and a significant drop in steam temperature. The desuperheater loop piping is protected from thermal shock in the area of the nozzle by a thermal sleeve or liner. Thermal shock may occur when relatively cold drops of spray water impinge on the pipe wall.

A feed forward control loop is suggested for desuperheater control. Primary control is achieved by measuring the final steam temperature and comparing it to the set point. The feed forward portion is accomplished by measuring the desuperheater outlet temperature, and the steam turbine load changes and calculating expected

spray flow. The feed forward portion will need to be trimmed in the field since load ramps vary by gas turbine. The purpose of these feed forward components is to assure that the desuperheater system has adequate time to react to a change in operating conditions.

To assure that wet steam is not admitted to the heating surface, the desuperheater outlet shall limit the interstage steam temperature to within no less than 50℉ (28℃) of the saturation temperature at anytime.

2.8.4 CONTINUOUS BLOWDOWN (CBD)

The HP and LP drums have continuous blow down lines. The blow down flow rate is controlled by a pneumatic control valve and a motor operated isolation valves. The isolation valves should be used by the operators to isolate the system during shutdown. During normal operations the control valve receives a signal form the DCS to regulate a small quantity of flow out of the drum based on the drum TDS or conductivity. The drum TDS and conductivity are measured by the sampling system which analyzes samples taken from the steam drum.

NOTE: Drum water purity directly affects the final steam purity of saturated steam leaving the steam drum.

2.8.5 INTERMITTENT BLOWDOWN (IBD)

The intermittent blowoff line, referred to as intermittent blow down or IBD, is required by the ASME code to blow off any solids that may collect in the lowest point of the evaporator (boiler) sections. It is also designed to remove excess water either at start-up (for swell control) or to correct severe problems with drum chemistry (high impurities or excessive chemical injection). The IBD is a motor operated slow opening valve, which can be operated at any time as deemed necessary for chemistry control or level control.

Intermittent blowdown is not normally needed after the unit is stabilized at a NWL provided the continuous blowdown system can maintain drum water solids level. Increases in solids concentration may be attributed to upsets in water treatment or changes in water chemistry.

2.8.6 INSTRUMENTS

The HRSG has various instruments required by the Code, plus many others to aid in reliable and safe operation. Please refer to the Vogt Power P&ID's (V17460-ICND-001 through -006), instrument arrangements (V17460-ICND-030 and -031), and

suggested instrument installation drawings (V17460-ICND-116 through -138) for complete information regarding the location and arrangement of instrumentation

2.8.6.1 PRESSURE INDICATOR (Pressure Gauge)

Pressure indicators are required by the ASME Code to provide a local indication of drum pressure. These pressure indicators should not be removed from the HRSG. Other pressure indicators have been included as required by contract.

2.8.6.2 PRESSURE TRANSMITTER

Pressure transmitters have been placed at various locations to collect operating pressures for the control system in the control room. They are used to measure system pressures at various locations as required by contract.

2.8.6.3 TEMPERATURE INDICATOR (Temperature Gauge)

Temperature indicators have been included on the superheater outlet lines as required by the ASME code, and at other locations according to contract.

2.8.6.4 THERMOCOUPLES

Thermocouples have been incorporated into the HRSG for control purposes and for remote monitoring of system temperatures.

2.8.7 DRUM WATER LEVEL INDICATORS

Drum water level indication is required by the ASME Code. These Indicators are located on each head of each steam drum. Two different types of level indication are used. Direct line of sight indicators or gauge glasses and level transmitters.

Bear in mind that an offset occurs between the indication and actual water level in the steam drum. This offset is a result of sub-cooling that occurs in the water column. The greatest offset will be on the high pressure system. The offset is minimal at low water levels, and indication is therefore most accurate at low level cut off. Transmitter signals can be “density compensated” in order to account for this offset and provide an accurate reading. Probe columns and level gages cannot be compensated.

2.8.7.1 GAUGE GLASS

The ASME Code requires at least one gage glass is required on each steam drum. The gauge glass, when correctly installed and maintained per the ASME Code and manufacturer's recommendation, indicates the steam drum water level at the drum operating platform. Gauge glass observations must be unobstructed per ASME Code.

The gauge glass should be kept clean and in operational condition at all times. The glass used in boiler gauge glass should be mica protected to prevent corrosion of the glass with the drum water chemicals. Boiler gauge glass should be replaced following boiler cleaning procedures.

Follow manufacturer's instructions when blowing down the gauge glasses (See Section IV). Depending on boiler water conditions and the type of gauge glass, some glasses require frequent blowing down to keep the gauge clean and the connecting piping free of sludge. It is recommended that gauge glasses in operation be blown down once per shift.

WARNING: NO BOILER SHOULD BE IN OPERATION WITHOUT AT LEAST TWO INDEPENDENT, DEPENDABLE MEANS OF WATER LEVEL DETECTION IN SERVICE.

CAUTION: Per ASME Section 1 Code, Para. PG-60.1.1, "Two independent remote level indicators may be provided instead of one of the two required gage glass for boiler drum water level indication in the case of power boilers with all drum safety valves set at or above 900 psi. When both remote level indicators are in reliable operation, the remaining gage glass may be shut off, but shall be maintained in serviceable condition." Due to the high corrosion rate of mica at elevated pressures and for the safety of plant personal, we recommend that the plant follow these guidelines for operation of the HP drum level gauges. Gauges on the LP system must remain in service at all times.

2.8.7.2 LEVEL TRANSMITTERS

Three (3) drum water level transmitters have been installed on each drum to monitor drum operating water level. The levels are transmitted to and indicated by the DCS. The DCS displays these signals in the control room. The signal levels are monitored and alarms are generated to alert the operator of levels outside the range required for safe operation of the HRSG and feed pumps.

WARNING: DRUM LEVEL MUST BE CONTROLLED NEAR NORMAL WATER LEVEL AT ALL TIMES.

High drum level will increase carryover to downstream equipment. Carryover can result in superheater tube contamination due to slight amounts of chemicals and impurities in the boiler water. Low drum level can cause circulation problems by restricting flow to the downcomers which, in turn, supply the evaporator circuits. This ultimately results in evaporator tube overheating and failure.

2.8.7.3 INDEPENDENT PROBE-TYPE LEVEL INDICATORS

One probe-type drum water level transmitter has been supplied for each drum to monitor drum operating water level. The levels are transmitted to and indicated by an independent display. This display should have a separate power source than the DCS. The signal levels are monitored and color is used to indicate if the level is within the required range required for safe operation of the HRSG and feed pumps. This reading is not density-compensated and will be inaccurate when the HRSG is not operating at or near it's design pressure.

WARNING: DRUM LEVEL MUST BE CONTROLLED NEAR NORMAL WATER LEVEL AT ALL TIMES.

2.9 DIVERTER DAMPER WITH BYPASS STACK

The HRSG is equipped with a diverter damper and bypass stack. The purpose of the diverter damper is to divert the GT exhaust gas flow away from the HRSG and into a bypass stack for discharge to atmosphere. This allows the GT to continue to operate after an HRSG trip, by performing an emergency close of the damper. It also increases the cycling range of the plant, and allows the HRSG to be repaired while still maintaining the generating capacity of the GT. Note that the HRSG must be blanked off with a separate blanking plate in order to enter while the GT is operating. Relying on the damper blade to provide protection for persons inside the HRSG is dangerous, as this blade can be easily moved by DCS or local command, and the gas seal is provided by a pneumatic system which can fail or be shut down.

The diverter damper is supplied with a bypass stack, supported on an independent steel frame. The bypass stack is internally insulated, due to the high temperatures of the diverted gas. The bypass stack is supplied with the same CEMS ports, thermocouples, and EPA test ports as the exhaust stack.

For more information on the diverter damper, see the vendor manuals in Section IV of this manual.

2.10 FIGURES

The Figures included in the following pages are not intended to replace the drawings for the HRSGs. These Figures have been included to clarify the text of the preceding paragraphs only.

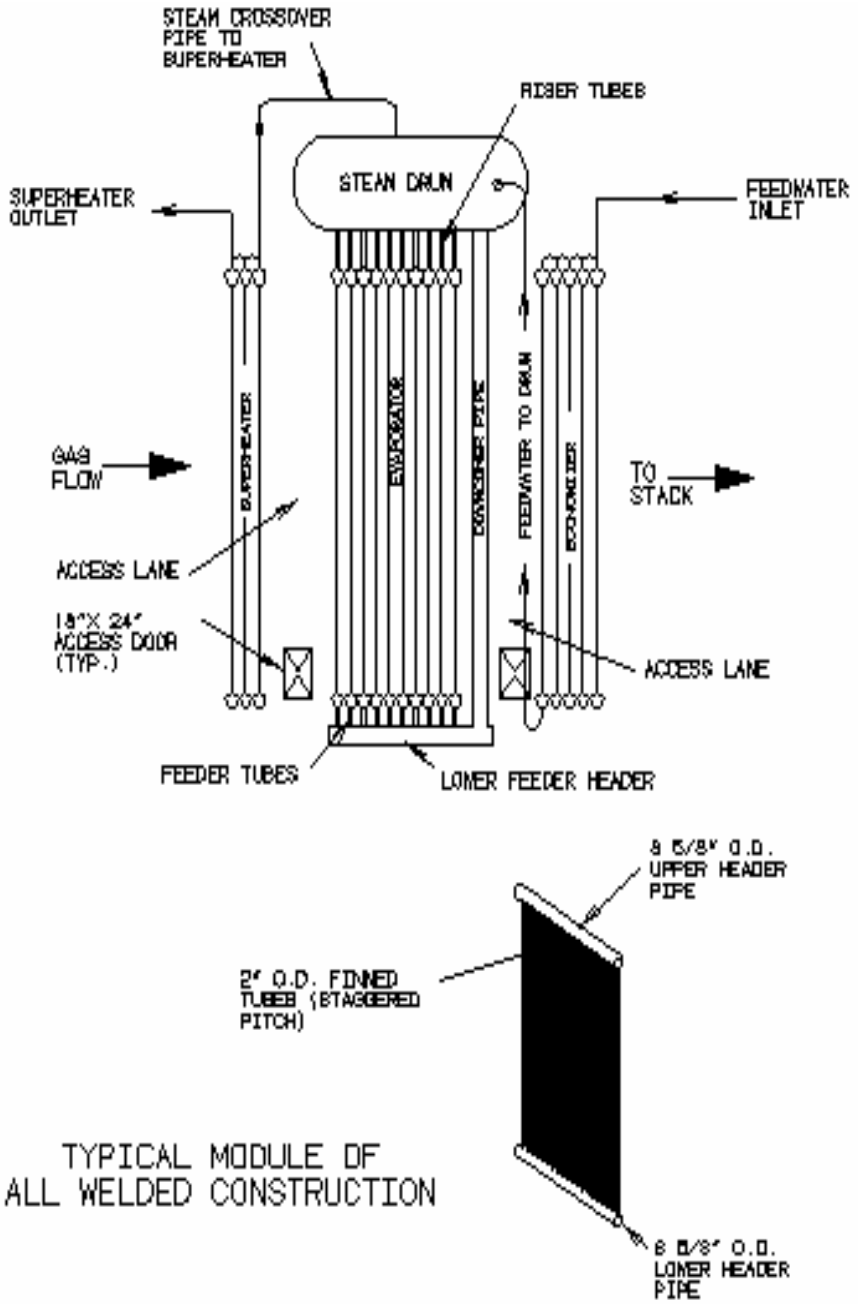

FIGURE 2.1 Steam Generator Circuit

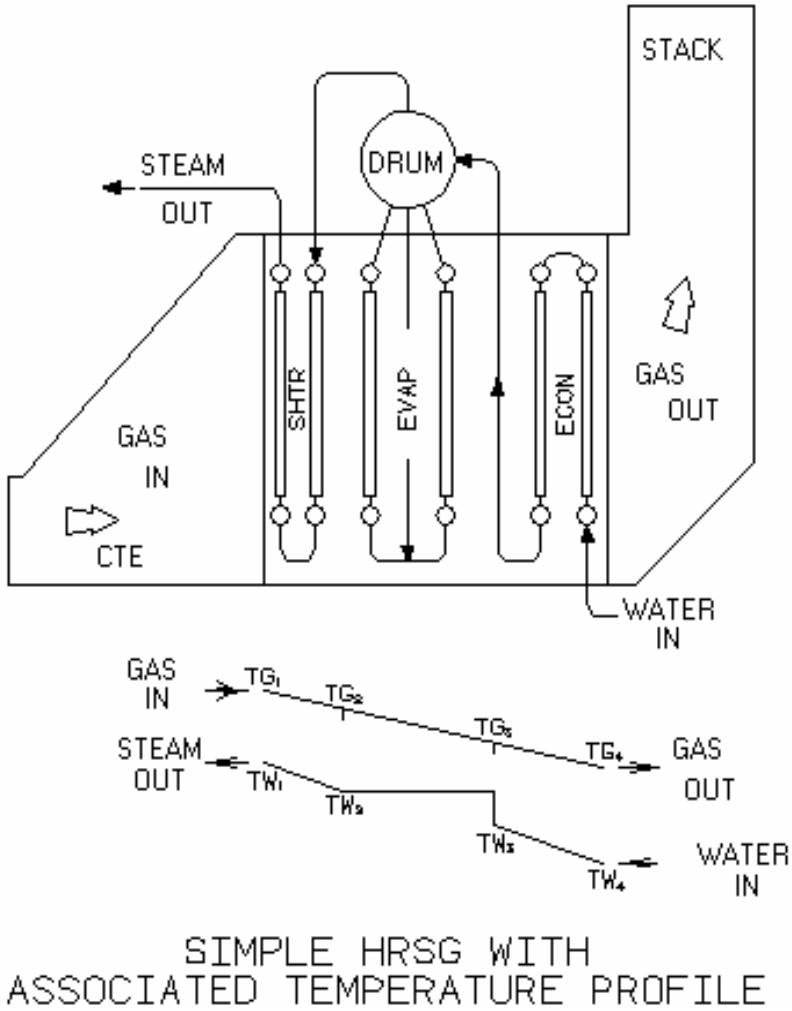

Figure 2.2 Typical HRSG Temperature Profile

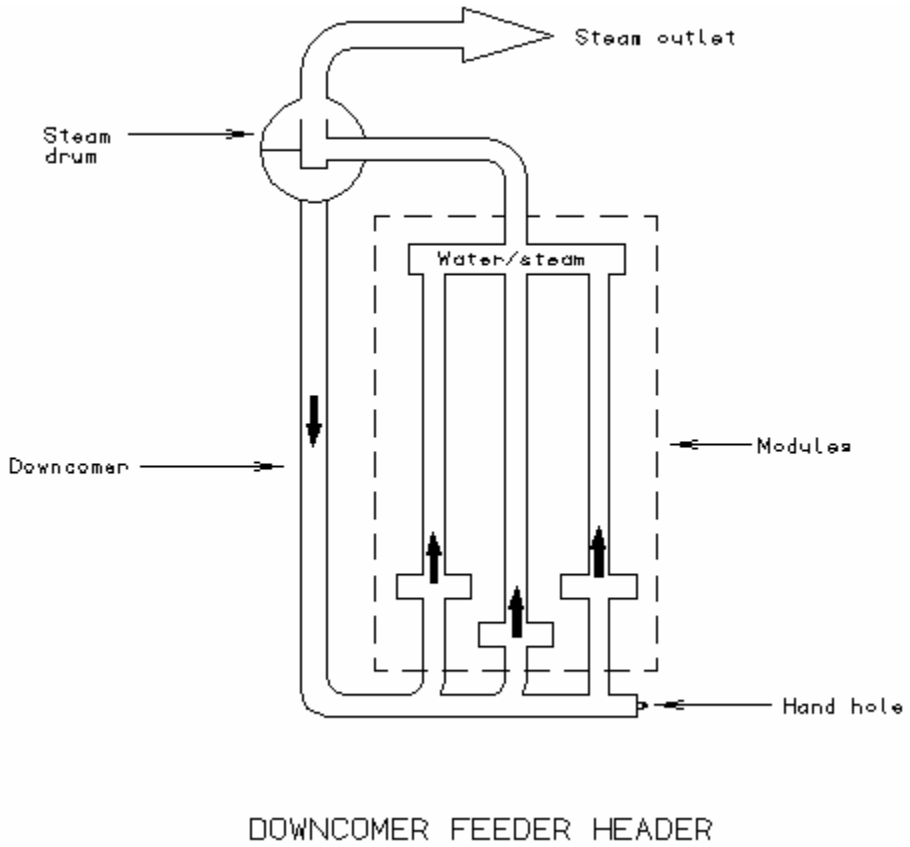

Figure 2.3 Typical HRSG Circulation Loop

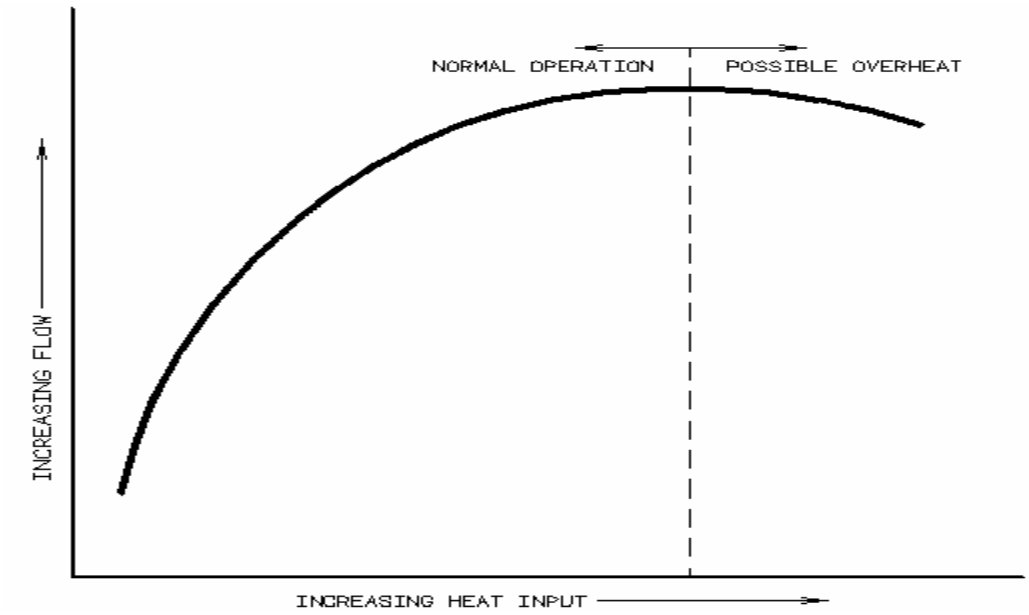

Figure 2.4 Increasing Flow versus Heat Input

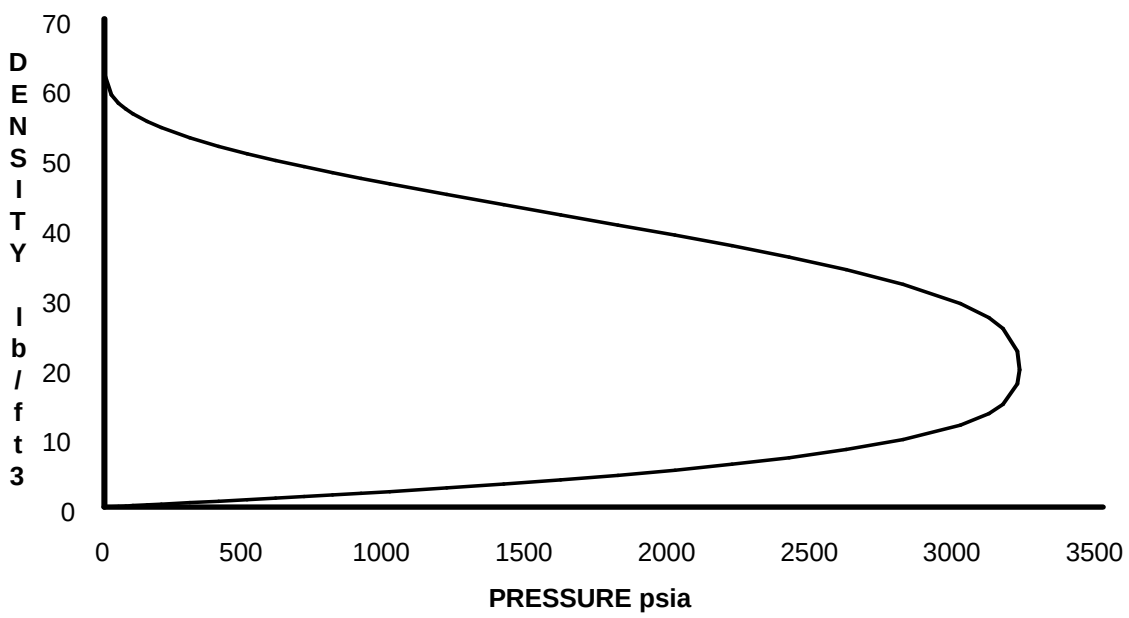

FIGURE 2.5 Steam/Water Mixture Density vs. Pressure Curve

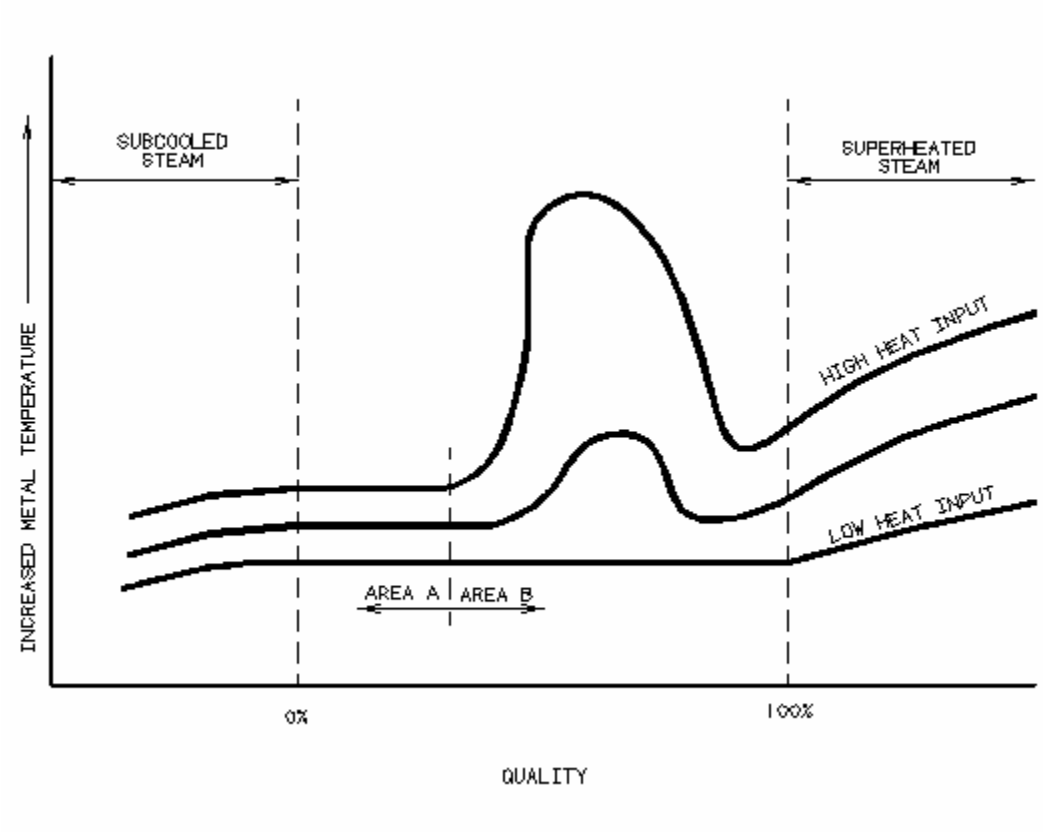

Figure 2.6 Heat Input versus Steam Quality

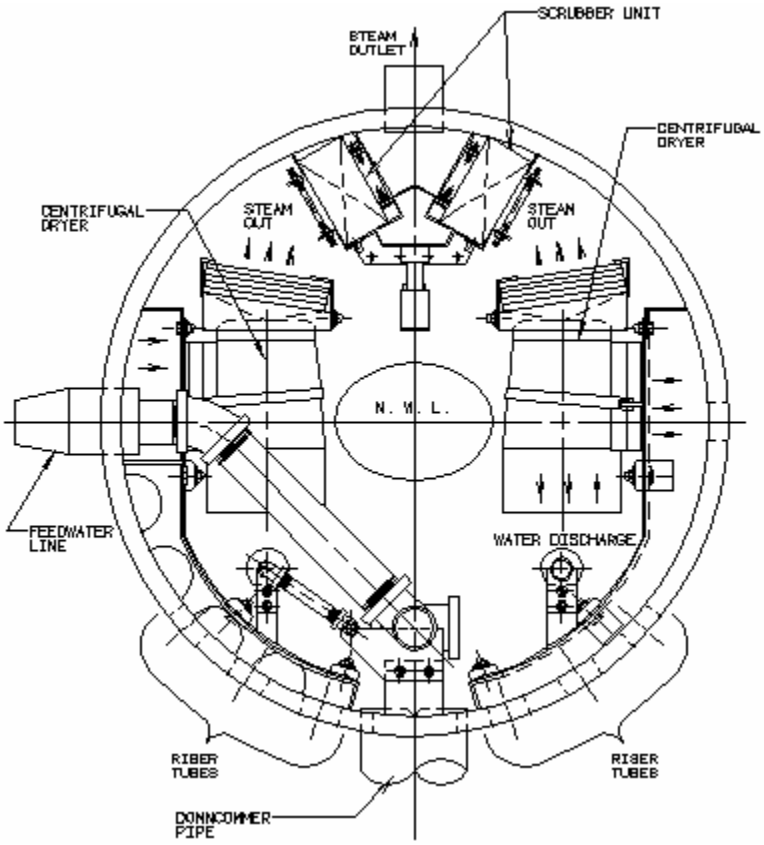

Figure 2.7 Typical Steam Drum Internals

2.11 REFERENCE

The following references were used to develop this system design description:

1. HRSG Piping and Instrument Diagrams V17460-ICND-001 through -006

2. HRSG Setting Drawings V17460-SEND-001 through -003

The following standards have been used in the design of the HRSG system:

1. American Society of Mechanical Engineers (ASME) Boiler Codes, Section I, 2010 Edition

2. ABMA - American Boiler Manufacturer's Association

3. AISC- American Institute of Steel Construction

4. ANSI - American National Standards Institute

5. ASTM - American Society for Testing and Materials

6. AWS - American Welding Society

7. CFR - Code of Federal Regulations (Part 60)

8. IEEE - Institute of Electrical and Electronic Engineers

9. MSS - Manufacturer's Standardization Society

10. NESC - National Electrical Safety Code

11. NICA - National Insulation Association

12. NEMA - National Electrical Manufacturer's Association

13. SSPC - Steel Structure Painting Council

14. OSHA - Federal Occupational Safety and Health Administration Standards, 29CFR and 1910 and 29CFR 1926

2.12 Abbreviations

The following abbreviations were used in the preceding:

CBD	-	Continuous Blowdown
GT	-	Gas Turbine
HRSG	-	Heat Recovery Steam Generator
HP	-	High Pressure
HPSH	-	High Pressure Superheater
HPEV	-	High Pressure Evaporator
HPEC	-	High Pressure Economizer
IBD	-	Intermittent Blowdown
LP	-	Low Pressure
LPSH	-	Low Pressure Superheater
LPEV	-	Low Pressure Evaporator
LPEC	-	LP economizer (also known Feedwater Heater)

3.0. SAFETY VALVE DATA

3.1. DESIGN AND FIELD HYDROTEST PRESSURES

The design and field hydrotest pressures for each HRSG system are listed below. Code stamping information can be found in Vogt Power Document No. V17460-SENF-001 titled "General Notes and Data". The Hydrotest Procedure can be found in Section III, Tab 2 of this Manual.

Heat Transfer Section	Design Pressure (psig)	Hydrotest Pressure (psig)	Design Pressure (barg)	Hydrotest Pressure (barg)
HP Superheater and Evaporator	1300	1950	89.6	134.4
HP Economizer*	1435	1950*	98.9	134.4*
LP Superheater and Evaporator	160	240	11.0	16.5
LP Economizer	125	638	29.3	44.0
Blowdown Tank**	50	75	3.4	5.2
Deaerator**	100	130	6.9	9.0

*-Hydrotest pressure per ASME Section I Code Interpretation I-89-68
**-Hydrotest pressure per ASME Section VIII Interpretation VIII-86-126 and UG-125

3.2 SAFETY VALVES - Factory Setting Versus Field Setting of Safety Valves

Every safety valve is set and adjusted on steam before shipment from the factory. Blowdown adjustments are made as carefully and accurately as possible on the factory test boiler. However, actual field operating conditions may vary considerably from factory test conditions.

Conditions beyond the manufacturer's control that effect safety valve operation are:

1. Quantity of steam being discharged through the valves. The actual installation capacity may exceed that of the test boiler.
2. Quality of steam being discharged.
3. Discharge piping stresses and back pressure.
4. Ambient temperature.
5. Shipping or storage damage.
6. Improper gagging.
7. Improper bolting of flanges.
8. Damage due to foreign material in the steam.

The removal of hydro plugs and final safety valve adjustment on the HRSG installation must be performed by the safety valve manufacturer's representative, or other safety valve assembly company recommended by the safety valve manufacturer, certified by ASME to use "V" stamp. This will insure that the valves perform in compliance with the ASME Boiler Code and/or other applicable code requirements.

Vogt Power's service representatives are not certified to set and test safety valves. The customer should procure safety valve service personnel direct from the manufacturer or safety valve assembly company. Note that many manufacturers will not warrant a valve set by anyone other than their own representatives.

3.3 SAFETY VALVE SETTINGS

Valve Location	Valve Setting (psig)	Valve Setting (barg)
HP Superheater Outlet	1235	85.2
HP Drum #1	1300	89.6
LP Superheater Outlet	160	11.0
LP Drum #1	174	12.0
LP Drum #2	185	12.8
LP Economizer Inlet	425	29.3
Deaeator	100	6.9

For additional information on safety valve design, see document V17460-SENF-001 and the vendor information in Section IV of this manual.

4.0. PERFORMANCE DATA

See Vogt Power Document V17460-ICNA-010 titled “HRSG Performance Data for PFD”, and V17460-ICND-010 title “Process Flow Diagram”, attached, for the expected performance data for the Amata B. Grimm Power (Rayong) 2 Limited HRSGs.

ENGINEERING DOCUMENT

Vogt Power International, Inc. • 4000 Dupont Circle • Louisville, Kentucky 40207

HRSG PERFORMANCE DATA for PROCESS FLOW DIAGRAM (PFD)

For

Toshiba Plant Systems & Services Corporation (TPSC)

For

ABPR2 Combined Cycle Cogeneration Plant Project

Vogt Power Job No. V17460

Vogt Power Document No. V17460-ICNA-010

Prepared By: Eric Sims

Reviewed By: Kelly Flannery

Rev.	Date	Engineer	Comments
00	7/11/2011	EMS	Initial Issue
01	9/27/2011	EMS	Added Client Title Block

OWNER		
Amata B. Grimm Power (Rayong) 2 Limited		
PROJECT		
ABPR2 Combined Cycle Cogeneration Plant Project		
CONTRACTOR		
Sumitomo Corporation		
TITLE		
HRSG PERFORMANCE DATA for PROCESS FLOW DIAGRAM (PFD)		
PROJECT CONTROL NO.	ABPR2-M-S-HA-0141	REV. 1

Notes:

1. This document is designed to be used with reference to VPI drawing no. V17460-ICND-010, "Process Flow Diagram". UEID numbers shown in the attached tables reference this drawing.

2. For additional information regarding the system design, please reference the HRSG P&ID's:

V17460-ICND-001	P&ID Legend & General Notes
V17460-ICND-002	Flue Gas P&ID
V17460-ICND-003	High Pressure P&ID
V17460-ICND-004	Low Pressure P&ID
V17460-ICND-005	DA, Storage Tank, and Heat Exhchanger P&ID
V17460-ICND-006	Blowdown, Silencers, PSV Vents & Drains P&ID
V17460-ICND-010	Process Flow Diagram

3. All data shown is predicted performance only.

4. Hydrostatic pressure head is not included in any HRSG pressure values

5. Blowdown has been set at zero for all drums in all cases

UEID - Description		1 - CTG Exhaust		12 - HP Main Steam Outlet Terminal Point			14 - HP Steam Upstream Non-Return Valve			125 - HP Attemperator Outlet			80 - HP Attemperator Spray Water Flow	
		Mass Flow	Temp	Mass Flow	Pressure	Temp	Mass Flow	Pressure	Temp	Mass Flow	Pressure	Temp	Mass Flow	Temp
VPI Case Name	Customer Case Name	kg/hr	°C	kg/hr	bara	°C	kg/hr	bara	°C	kg/hr	bara	°C	kg/hr	°C
G001.100%.33C.2U	Case 001	472,300	563.0	64,611	79.3	514.0	64,611	79.6	514.1	64,611	80.8	466.3	0	70.3
C001.100%.33C.2U	Case-01	431,600	579.0	62,457	78.0	527.6	62,457	78.4	527.7	62,457	79.5	476.9	0	70.6
C002.100%.33C.2U	Case-02	431,600	579.0	62,526	74.5	527.1	62,526	74.9	527.3	62,526	76.0	475.7	82	69.3
C003.100%.33C.1U	Case-03	431,600	579.0	63,250	54.1	527.7	63,250	54.6	527.9	63,250	56.2	475.7	149	67.9
C004.60%.33C.2U	Case-04	320,000	598.0	49,402	62.2	526.9	49,402	62.4	527.0	49,402	63.3	447.9	1,818	70.2
C005.100%.33C.2U	Case-05	472,300	563.0	64,615	79.3	513.0	64,615	79.6	513.2	64,615	80.7	464.3	100	70.6
G01N.100%.15C.2U	MKX20100001	474,900	561.0	64,423	78.5	512.6	64,423	78.8	512.8	64,423	79.9	465.3	0	68.3
G02N.100%.15C.2U	MKX20100015	474,900	561.0	64,453	76.1	512.9	64,453	76.4	513.0	64,453	77.6	465.7	0	71.4
G03N.60%.15C.2U	MKX20100016	332,500	600.0	51,061	58.3	526.8	51,061	58.6	526.9	51,061	59.6	446.7	1,905	68.8
G04N.50%.15C.2U	MKX20100002	310,900	600.0	47,700	59.4	526.8	47,700	59.6	526.9	47,700	60.5	444.4	1,940	69.8
G05N.100%.33C.2U	MKT20090001	430,200	581.0	0	77.3	526.8	62,681	77.6	526.9	62,681	78.7	473.5	214	72.6
G06N.100%.33C.2U	MKX20100003	430,200	581.0	62,690	74.9	526.8	62,690	75.2	526.9	62,690	76.4	473.3	245	72.1
G07N.60%.33C.2U	MKT20090002	319,300	600.0	49,581	61.7	526.8	49,581	61.9	526.9	49,581	62.8	445.7	1,939	71.1
G08N.60%.33C.2U	MKX20100004	319,300	600.0	49,687	56.6	526.8	49,687	56.9	526.9	49,687	57.9	445.0	1,959	70.5
G09N.50%.33C.2U	MKX20100005	295,800	600.0	45,994	57.3	526.8	45,994	57.6	526.9	45,994	58.4	442.2	1,990	70.6
G10N.50%.33C.2U	MKX20100006	295,800	600.0	46,104	52.3	526.8	46,104	52.6	526.9	46,104	53.5	441.4	2,004	70.3
G11N.100%.33C.2U	MKT20090003	472,300	565.0	64,992	79.3	515.3	64,992	79.6	515.5	64,992	80.8	467.1	0	72.9
G12N.100%.33C.2U	MKT20090004	472,300	565.0	65,007	76.9	515.6	65,007	77.2	515.8	65,007	78.4	467.5	0	72.3
G13N.100%.33C.2U	MKX20100007	472,300	565.0	64,973	79.2	515.3	64,973	79.6	515.5	64,973	80.7	467.2	0	105.5
G14N.100%.33C.2U	MKX20100008	472,300	565.0	65,005	79.3	515.3	65,005	79.6	515.4	65,005	80.8	467.1	0	76.6
G15N.100%.33C.2U	MKX20100009	472,300	565.0	65,015	76.9	515.6	65,015	77.2	515.8	65,015	78.4	467.5	0	75.4
G16N.100%.40C.1U	MKX20100010	472,300	565.0	65,978	53.7	517.0	65,978	54.2	517.2	65,978	56.0	469.0	0	60.0
G17N.100%.40C.1U	MKX20100011	472,300	565.0	65,924	53.7	517.0	65,924	54.2	517.3	65,924	56.0	469.1	0	59.2
G18N.100%.40C.2U	MKX20100012	386,000	599.0	60,091	74.3	526.8	60,091	74.6	526.9	60,091	75.6	455.2	1,607	74.8
G19N.100%.40C.2U	MKX20100017	386,000	599.0	60,172	69.2	526.8	60,172	69.5	526.9	60,172	70.7	454.5	1,650	74.6
G20N.60%.40C.2U	MKX20100018	303,300	600.0	47,719	54.3	526.8	47,719	54.6	526.9	47,719	55.5	442.7	2,015	73.6
G21N.50%.40C.2U	MKX20100013	284,600	600.0	44,725	55.8	526.8	44,725	56.0	526.9	44,725	56.8	440.5	2,027	72.9
G22N.100%.33C.2U	MKX20100019	472,300	565.0	64,984	76.8	515.7	64,984	77.2	515.8	64,984	78.4	467.6	0	105.5
G23N.100%.33C.2U	MKX20100020	472,300	565.0	64,987	76.8	515.6	64,987	77.2	515.8	64,987	78.4	467.6	0	105.5
G24N.100%.40C.2U	MKX20100021	386,000	599.0	60,223	69.2	526.8	60,223	69.6	527.0	60,223	70.7	454.5	1,722	105.4
G002.100%.33C.2U	Case 002	472,300	563.0	64,632	76.9	514.3	64,632	77.2	514.4	64,632	78.4	466.6	0	68.5
G003.100%.33C.2U	Case 003	430,200	579.0	61,356	77.3	526.9	61,356	77.6	527.0	61,356	78.7	475.3	96	70.8
G003B.100%.33C.2U	Case 003B	430,200	579.0	62,269	77.3	526.9	62,269	77.6	527.0	62,269	78.7	475.4	89	105.5
G003BE.100%.33C.2U	Case 003BE	430,200	579.0	62,280	74.8	526.9	62,280	75.2	527.0	62,280	76.3	475.2	122	105.5
G004.60%.33C.2U	Case 004	319,300	598.0	49,301	61.7	526.9	49,301	61.9	527.0	49,301	62.8	447.7	1,819	68.9
G004B.60%.33C.2U	Case 004B	319,300	598.0	49,372	61.8	526.9	49,372	62.0	527.0	49,372	62.9	447.9	1,911	105.3
G004BE.60%.33C.2U	Case 004BE	319,300	598.0	49,479	56.8	526.9	49,479	57.1	527.0	49,479	58.0	447.2	1,933	105.3
G005.60%.33C.2U	Case 005	348,800	598.0	53,127	66.3	526.9	53,127	66.6	527.0	53,127	67.5	451.5	1,708	69.9
G011.100%.33C.1U	Case 011	472,300	563.0	66,369	41.2	515.5	66,369	41.9	515.9	66,369	44.1	467.9	0	58.4
G013.100%.33C.1U	Case 013	430,200	579.0	63,815	39.9	526.9	63,815	40.6	527.2	63,815	42.8	473.8	232	59.3
G013B.100%.33C.1U	Case 013B	430,200	579.0	63,820	39.9	526.9	63,820	40.6	527.2	63,820	42.8	473.8	248	105.3
G014.60%.33C.1U	Case 014	319,300	598.0	50,410	31.7	526.9	50,410	32.2	527.1	50,410	33.9	444.9	1,801	56.9
G014B.60%.33C.1U	Case 014B	319,300	598.0	50,517	31.7	526.9	50,517	32.3	527.1	50,517	34.0	445.2	1,919	105.2
G015.60%.33C.1U	Case 015	348,800	598.0	54,296	34.1	526.9	54,296	34.7	527.2	54,296	36.5	448.5	1,724	58.3
G006.50%.33C.2U	Case 006	298,500	598.0	46,121	57.8	527.0	46,121	58.0	527.1	46,121	58.8	444.9	1,862	68.4
G006B.50%.33C.2U	Case 006B	298,500	598.0	46,199	57.9	527.0	46,199	58.1	527.1	46,199	58.9	445.1	1,956	105.3
G006BE.50%.33C.2U	Case 006BE	298,500	598.0	46,311	52.9	527.0	46,311	53.2	527.1	46,311	54.1	444.4	1,973	105.3
G016.50%.33C.2U	Case 016	298,500	598.0	47,172	29.6	527.0	47,172	30.1	527.2	47,172	31.8	442.3	1,826	57.4
G007.100%.12C.2U	Case 007	477,400	561.0	64,586	79.2	512.5	64,586	79.5	512.6	64,586	80.7	465.2	0	64.8
G008.100%.40C.2U	Case 008	385,200	598.0	59,696	74.3	526.9	59,696	74.6	527.0	59,696	75.6	456.0	1,543	73.4
G009.50%.40C.2U	Case 009	283,000	598.0	44,249	53.7	526.9	44,249	54.0	527.0	44,249	54.8	442.1	1,920	71.4
G019.50%.40C.1U	Case 019	283,000	598.0	45,271	27.5	526.9	45,271	28.0	527.1	45,271	29.6	439.9	1,872	63.1

Notes:

UEID - Description		121 - HP Attemperator Inlet			81 - HP Steam Drum Exit			118 - HP Economizer Outlet into Drum			111 - HP Economizer Inlet			65 - LPSH Pegging Steam to Deaerator		
		Mass Flow	Pressure	Temp	Mass Flow	Pressure	Temp	Mass Flow	Pressure	Temp	Mass Flow	Pressure	Temp	Mass Flow	Pressure	Temp
VPI Case Name	Customer Case Name	kg/hr	bara	°C	kg/hr	bara	°C	kg/hr	bara	°C	kg/hr	bara	°C	kg/hr	bara	°C
G001.100%.33C.2U	Case 001	64,611	80.8	466.3	64,611	81.9	296.7	64,611	81.9	292.7	64,611	88.1	70.2	0	9.0	246.2
C001.100%.33C.2U	Case-01	62,457	79.5	476.9	62,457	80.6	295.5	62,457	80.6	290.1	62,457	86.3	70.4	0	8.5	244.9
C002.100%.33C.2U	Case-02	62,444	76.0	477.3	62,444	77.2	292.5	62,444	77.2	287.2	62,444	82.9	69.1	0	7.2	240.7
C003.100%.33C.1U	Case-03	63,101	56.2	478.8	63,101	57.9	273.3	63,101	57.9	270.1	63,101	63.7	67.7	151	4.9	226.8
C004.60%.33C.2U	Case-04	47,584	63.3	495.0	47,584	64.1	280.0	47,584	64.1	275.2	47,584	67.5	70.1	0	6.5	235.4
C005.100%.33C.2U	Case-05	64,515	80.7	466.2	64,515	81.9	296.7	64,515	81.9	292.5	64,515	88.1	70.5	0	8.3	244.7
G01N.100%.15C.2U	MKX20100001	64,423	79.9	465.3	64,423	81.1	296.0	64,423	81.1	292.2	64,423	87.2	68.2	0	8.9	246.2
G02N.100%.15C.2U	MKX20100015	64,453	77.6	465.7	64,453	78.8	294.0	64,453	78.8	290.2	64,453	84.9	71.3	0	7.6	242.4
G03N.60%.15C.2U	MKX20100016	49,156	59.6	495.0	49,156	60.6	276.2	49,156	60.6	271.5	49,156	64.1	68.7	232	5.3	230.7
G04N.50%.15C.2U	MKX20100002	45,760	60.5	496.9	45,760	61.3	277.0	45,760	61.3	272.7	45,760	64.4	69.7	0	6.2	234.0
G05N.100%.33C.2U	MKT20090001	62,467	78.7	477.7	62,467	79.9	294.9	62,467	79.9	289.5	62,467	85.6	72.5	0	8.5	244.8
G06N.100%.33C.2U	MKX20100003	62,445	76.4	478.0	62,445	77.6	292.9	62,445	77.6	287.3	62,445	83.3	72.0	36	7.1	240.8
G07N.60%.33C.2U	MKT20090002	47,642	62.8	495.8	47,642	63.7	279.5	47,642	63.7	274.8	47,642	67.0	71.0	0	6.5	235.4
G08N.60%.33C.2U	MKX20100004	47,728	57.9	496.2	47,728	58.8	274.3	47,728	58.8	269.8	47,728	62.2	70.4	155	5.1	229.5
G09N.50%.33C.2U	MKX20100005	44,004	58.4	498.4	44,004	59.2	274.7	44,004	59.2	270.6	44,004	62.0	70.5	0	6.0	232.5
G10N.50%.33C.2U	MKX20100006	44,100	53.5	498.8	44,100	54.4	269.3	44,100	54.4	265.3	44,100	57.3	70.2	167	4.6	226.4
G11N.100%.33C.2U	MKT20090003	64,992	80.8	467.1	64,992	82.0	296.7	64,992	82.0	292.5	64,992	88.2	72.7	0	9.0	246.3
G12N.100%.33C.2U	MKT20090004	65,007	78.4	467.5	65,007	79.7	294.7	65,007	79.7	290.4	65,007	85.9	72.1	0	7.6	242.7
G13N.100%.33C.2U	MKX20100007	64,973	80.7	467.2	64,973	81.9	296.6	64,973	81.9	292.2	64,973	88.1	105.4	4,454	8.2	244.0
G14N.100%.33C.2U	MKX20100008	65,005	80.8	467.1	65,005	82.0	296.7	65,005	82.0	292.4	65,005	88.2	76.4	0	9.0	246.0
G15N.100%.33C.2U	MKX20100009	65,015	78.4	467.5	65,015	79.7	294.7	65,015	79.7	290.4	65,015	85.9	75.2	0	7.7	242.4
G16N.100%.40C.1U	MKX20100010	65,978	56.0	469.0	65,978	57.8	273.2	65,978	57.8	271.4	65,978	64.1	59.8	0	5.3	227.6
G17N.100%.40C.1U	MKX20100011	65,924	56.0	469.1	65,924	57.8	273.2	65,924	57.8	271.1	65,924	64.1	59.0	0	4.4	225.0
G18N.100%.40C.2U	MKX20100012	58,484	75.6	487.9	58,484	76.7	292.1	58,484	76.7	285.9	58,484	81.7	74.7	0	7.9	242.6
G19N.100%.40C.2U	MKX20100017	58,521	70.7	488.5	58,521	71.8	287.6	58,521	71.8	281.6	58,521	76.8	74.5	0	6.6	237.7
G20N.60%.40C.2U	MKX20100018	45,704	55.5	497.8	45,704	56.4	271.6	45,704	56.4	267.4	45,704	59.5	73.6	44	4.9	227.8
G21N.50%.40C.2U	MKX20100013	42,698	56.8	499.5	42,698	57.6	272.9	42,698	57.6	269.0	42,698	60.3	72.8	0	5.8	231.4
G22N.100%.33C.2U	MKX20100019	64,984	78.4	467.6	64,984	79.6	294.7	64,984	79.6	290.2	64,984	85.8	105.4	5,405	6.7	239.5
G23N.100%.33C.2U	MKX20100020	64,987	78.4	467.6	64,987	79.6	294.7	64,987	79.6	290.2	64,987	85.8	105.4	4,326	6.7	239.6
G24N.100%.40C.2U	MKX20100021	58,501	70.7	488.5	58,501	71.9	287.6	58,501	71.9	281.5	58,501	76.9	105.3	4,680	5.9	235.1
G002.100%.33C.2U	Case 002	64,632	78.4	466.6	64,632	79.6	294.7	64,632	79.6	290.6	64,632	85.8	68.4	0	7.6	242.6
G003.100%.33C.2U	Case 003	61,259	78.7	477.2	61,259	79.8	294.8	61,259	79.8	289.6	61,259	85.3	70.6	0	8.5	244.7
G003B.100%.33C.2U	Case 003B	62,180	78.7	477.0	62,180	79.8	294.9	62,180	79.8	289.4	62,180	85.5	105.4	4,300	7.7	242.7
G003BE.100%.33C.2U	Case 003BE	62,158	76.3	477.4	62,158	77.5	292.8	62,158	77.5	287.3	62,158	83.1	105.4	5,410	6.2	237.7
G004.60%.33C.2U	Case 004	47,482	62.8	495.1	47,482	63.7	279.5	47,482	63.7	274.9	47,482	67.0	68.8	0	6.5	235.3
G004B.60%.33C.2U	Case 004B	47,461	62.9	495.2	47,461	63.7	279.6	47,461	63.7	274.8	47,461	67.1	105.3	3,627	5.9	233.5
G004BE.60%.33C.2U	Case 004BE	47,546	58.0	495.6	47,546	59.0	274.4	47,546	59.0	269.8	47,546	62.3	105.2	4,704	4.4	226.4
G005.60%.33C.2U	Case 005	51,419	67.5	492.1	51,419	68.5	284.4	51,419	68.5	279.2	51,419	72.4	69.8	0	7.0	238.1
G011.100%.33C.1U	Case 011	66,369	44.1	467.9	66,369	46.5	259.4	66,369	46.5	259.4	66,369	52.8	58.3	0	4.5	219.7
G013.100%.33C.1U	Case 013	63,584	42.8	478.7	63,584	45.1	257.5	63,584	45.1	256.4	63,584	50.9	59.1	0	4.2	217.8
G013B.100%.33C.1U	Case 013B	63,572	42.8	478.7	63,572	45.1	257.5	63,572	45.1	256.3	63,572	50.9	105.1	5,874	3.7	215.9
G014.60%.33C.1U	Case 014	48,609	33.9	495.4	48,609	35.6	243.6	48,609	35.6	242.0	48,609	39.0	56.8	0	3.2	208.0
G014B.60%.33C.1U	Case 014B	48,598	34.0	495.4	48,598	35.7	243.7	48,598	35.7	242.0	48,598	39.1	105.1	4,794	2.9	206.3
G015.60%.33C.1U	Case 015	52,572	36.5	492.9	52,572	38.4	247.9	52,572	38.4	246.1	52,572	42.3	58.2	0	3.5	210.8
G006.50%.33C.2U	Case 006	44,260	58.8	497.5	44,260	59.7	275.2	44,260	59.7	271.3	44,260	62.5	68.4	0	6.0	233.2
G006B.50%.33C.2U	Case 006B	44,242	58.9	497.5	44,242	59.7	275.3	44,242	59.7	271.2	44,242	62.6	105.2	3,424	5.5	231.5
G006BE.50%.33C.2U	Case 006BE	44,338	54.1	497.8	44,338	55.0	270.0	44,338	55.0	266.0	44,338	57.9	105.2	4,407	4.0	224.0
G016.50%.33C.2U	Case 016	45,346	31.8	497.3	45,346	33.4	239.8	45,346	33.4	238.8	45,346	36.3	57.3	0	3.0	206.1
G007.100%.12C.2U	Case 007	64,586	80.7	465.2	64,586	81.8	296.6	64,586	81.8	292.6	64,586	88.0	64.7	0	8.3	244.8
G008.100%.40C.2U	Case 008	58,153	75.6	487.7	58,153	76.7	292.1	58,153	76.7	285.9	58,153	81.7	73.3	0	7.5	241.6
G009.50%.40C.2U	Case 009	42,329	54.8	499.1	42,329	55.6	270.6	42,329	55.6	266.8	42,329	58.2	71.4	0	5.5	229.5
G019.50%.40C.1U	Case 019	43,399	29.6	498.5	43,399	31.2	236.1	43,399	31.2	234.6	43,399	33.9	63.0	0	2.8	202.8

Notes:

Flows are per HRSG.

UEID - Description		34 - LP Main Steam Outlet Terminal Point			189 - LP Steam Upstream NRV			185 - LP Steam Drum Exit			86 - LP Economizer Flow into LP Drum			85 - LP Economizer Outlet upstream Drum Lvl CV (after pegging extraction)		
		Flow	Pressure	Temp	Mass Flow	Pressure	Temp	Mass Flow	Pressure	Temp	Mass Flow	Pressure	Temp	Mass Flow	Pressure	Temp
VPI Case Name	Customer Case Name	kg/hr	bara	°C	kg/hr	bara	°C	kg/hr	bara	°C	kg/hr	bara	°C	kg/hr	bara	°C
G001.100%.33C.2U	Case 001	11,958	9.0	246.2	11,958	9.2	246.6	11,958	9.5	177.6	11,958	9.5	171.1	11,958	12.9	171.0
C001.100%.33C.2U	Case-01	10,477	8.5	244.9	10,477	8.7	245.3	10,477	8.9	175.1	10,477	8.9	166.7	10,477	12.4	166.7
C002.100%.33C.2U	Case-02	10,654	7.2	240.7	10,654	7.5	241.2	10,654	7.7	168.9	10,654	7.7	159.5	10,654	11.2	159.5
C003.100%.33C.1U	Case-03	9,964	4.9	226.8	9,964	5.2	227.4	9,964	5.5	155.7	9,964	5.5	145.0	9,964	9.0	144.9
C004.60%.33C.2U	Case-04	6,984	6.5	235.4	6,984	6.6	235.7	6,984	6.7	163.4	6,984	6.7	151.5	6,984	10.2	151.5
C005.100%.33C.2U	Case-05	12,197	8.3	244.7	12,197	8.6	245.2	12,197	8.9	174.9	12,197	8.9	168.0	12,197	12.4	168.0
G01N.100%.15C.2U	MKX20100001	11,771	8.9	246.2	11,771	9.2	246.7	11,771	9.4	177.3	11,771	9.4	166.7	11,771	12.9	166.6
G02N.100%.15C.2U	MKX20100015	12,084	7.6	242.4	12,084	7.9	243.0	12,084	8.2	171.6	12,084	8.2	161.2	12,084	11.7	161.1
G03N.60%.15C.2U	MKX20100016	7,140	5.3	230.7	7,140	5.5	231.0	7,140	5.6	156.3	7,140	5.6	139.9	7,140	9.1	139.9
G04N.50%.15C.2U	MKX20100002	6,511	6.2	234.0	6,511	6.3	234.2	6,511	6.4	161.6	6,511	6.4	148.2	6,511	9.9	148.2
G05N.100%.33C.2U	MKT20090001	10,283	8.5	244.8	10,283	8.7	245.2	10,283	8.9	174.9	10,283	8.9	165.2	10,283	12.4	165.2
G06N.100%.33C.2U	MKX20100003	10,504	7.1	240.8	10,504	7.4	241.2	10,504	7.6	168.5	10,504	7.6	155.3	10,504	11.1	155.3
G07N.60%.33C.2U	MKT20090002	6,886	6.5	235.4	6,886	6.6	235.6	6,886	6.7	163.3	6,886	6.7	150.7	6,886	10.2	150.6
G08N.60%.33C.2U	MKX20100004	6,906	5.1	229.5	6,906	5.3	229.8	6,906	5.4	155.1	6,906	5.4	138.6	6,906	8.9	138.6
G09N.50%.33C.2U	MKX20100005	6,248	6.0	232.5	6,248	6.1	232.7	6,248	6.2	160.2	6,248	6.2	147.4	6,248	9.7	147.3
G10N.50%.33C.2U	MKX20100006	6,257	4.6	226.4	6,257	4.8	226.6	6,257	4.9	151.2	6,257	4.9	134.5	6,257	8.4	134.5
G11N.100%.33C.2U	MKT20090003	11,803	9.0	246.3	11,803	9.2	246.7	11,803	9.5	177.6	11,803	9.5	169.6	11,803	12.9	169.6
G12N.100%.33C.2U	MKT20090004	11,978	7.6	242.7	11,978	8.0	243.2	11,978	8.3	171.7	11,978	8.3	161.2	11,978	11.7	161.2
G13N.100%.33C.2U	MKX20100007	12,286	8.2	244.0	12,286	8.5	244.6	12,286	8.8	174.3	12,286	8.8	167.6	12,286	12.2	167.5
G14N.100%.33C.2U	MKX20100008	11,927	9.0	246.0	11,927	9.3	246.5	11,927	9.5	177.7	11,927	9.5	171.5	11,927	13.0	171.4
G15N.100%.33C.2U	MKX20100009	12,098	7.7	242.4	12,098	8.0	243.0	12,098	8.3	171.8	12,098	8.3	162.8	12,098	11.7	162.8
G16N.100%.40C.1U	MKX20100010	11,313	5.3	227.6	11,313	5.7	228.3	11,313	6.0	159.0	11,313	6.0	154.7	11,313	9.5	154.6
G17N.100%.40C.1U	MKX20100011	11,585	4.4	225.0	11,585	4.9	226.0	11,585	5.3	154.3	11,585	5.3	147.5	11,585	8.8	147.5
G18N.100%.40C.2U	MKX20100012	8,945	7.9	242.6	8,945	8.1	242.9	8,945	8.3	171.9	8,945	8.3	161.8	8,945	11.7	161.8
G19N.100%.40C.2U	MKX20100017	8,919	6.6	237.7	8,919	6.8	238.1	8,919	7.0	165.1	8,919	7.0	151.3	8,919	10.5	151.2
G20N.60%.40C.2U	MKX20100018	6,572	4.9	227.8	6,572	5.0	228.1	6,572	5.2	153.1	6,572	5.2	137.1	6,572	8.6	137.1
G21N.50%.40C.2U	MKX20100013	6,088	5.8	231.4	6,088	5.9	231.6	6,088	6.0	159.0	6,088	6.0	148.7	6,088	9.5	148.6
G22N.100%.33C.2U	MKX20100019	12,737	6.7	239.5	12,737	7.1	240.2	12,737	7.4	167.5	12,737	7.4	162.1	12,737	10.9	162.1
G23N.100%.33C.2U	MKX20100020	12,711	6.7	239.6	12,711	7.1	240.4	12,711	7.5	167.7	12,711	7.5	162.4	12,711	11.0	162.3
G24N.100%.40C.2U	MKX20100021	9,546	5.9	235.1	9,546	6.1	235.6	9,546	6.4	161.2	9,546	6.4	153.9	9,546	9.8	153.8
G002.100%.33C.2U	Case 002	12,110	7.6	242.6	12,110	8.0	243.2	12,110	8.3	171.7	12,110	8.3	163.1	12,110	11.7	163.0
G003.100%.33C.2U	Case 003	10,260	8.5	244.7	10,260	8.7	245.0	10,260	8.9	174.8	10,260	8.9	166.7	10,260	12.3	166.7
G003B.100%.33C.2U	Case 003B	10,796	7.7	242.7	10,796	8.0	243.2	10,796	8.2	171.4	10,796	8.2	164.0	10,796	11.7	163.9
G003BE.100%.33C.2U	Case 003BE	11,271	6.2	237.7	11,271	6.5	238.4	11,271	6.8	163.8	11,271	6.8	158.0	11,271	10.3	158.0
G004.60%.33C.2U	Case 004	6,981	6.5	235.3	6,981	6.6	235.6	6,981	6.8	163.5	6,981	6.8	153.3	6,981	10.2	153.2
G004B.60%.33C.2U	Case 004B	7,287	5.9	233.5	7,287	6.0	233.7	7,287	6.2	159.9	7,287	6.2	150.3	7,287	9.6	150.2
G004BE.60%.33C.2U	Case 004BE	7,577	4.4	226.4	7,577	4.6	226.8	7,577	4.8	150.2	7,577	4.8	143.2	7,577	8.2	143.2
G005.60%.33C.2U	Case 005	7,664	7.0	238.1	7,664	7.1	238.4	7,664	7.3	166.5	7,664	7.3	155.3	7,664	10.7	155.3
G011.100%.33C.1U	Case 011	10,534	4.5	219.7	10,534	4.9	220.5	10,534	5.2	153.4	10,534	5.2	150.7	10,534	8.7	150.6
G013.100%.33C.1U	Case 013	9,220	4.2	217.8	9,220	4.6	218.5	9,220	4.8	150.6	9,220	4.8	146.0	9,220	8.3	146.0
G013B.100%.33C.1U	Case 013B	9,665	3.7	215.9	9,665	4.1	216.7	9,665	4.5	147.7	9,665	4.5	145.5	9,665	7.9	145.5
G014.60%.33C.1U	Case 014	6,193	3.2	208.0	6,193	3.4	208.4	6,193	3.6	139.8	6,193	3.6	134.2	6,193	7.0	134.2
G014B.60%.33C.1U	Case 014B	6,533	2.9	206.3	6,533	3.1	206.8	6,533	3.3	136.7	6,533	3.3	133.5	6,533	6.7	133.5
G015.60%.33C.1U	Case 015	6,798	3.5	210.8	6,798	3.7	211.3	6,798	3.9	142.7	6,798	3.9	136.0	6,798	7.3	136.0
G006.50%.33C.2U	Case 006	6,356	6.0	233.2	6,356	6.2	233.4	6,356	6.3	160.5	6,356	6.3	151.2	6,356	9.7	151.2
G006B.50%.33C.2U	Case 006B	6,618	5.5	231.5	6,618	5.6	231.7	6,618	5.7	157.2	6,618	5.7	148.2	6,618	9.2	148.1
G006BE.50%.33C.2U	Case 006BE	6,910	4.0	224.0	6,910	4.2	224.4	6,910	4.4	146.9	6,910	4.4	140.9	6,910	7.8	140.8
G016.50%.33C.2U	Case 016	5,619	3.0	206.1	5,619	3.2	206.5	5,619	3.3	137.2	5,619	3.3	132.7	5,619	6.8	132.7
G007.100%.12C.2U	Case 007	12,170	8.3	244.8	12,170	8.6	245.4	12,170	8.9	174.8	12,170	8.9	165.0	12,170	12.3	164.9
G008.100%.40C.2U	Case 008	9,107	7.5	241.6	9,107	7.7	241.9	9,107	7.9	169.8	9,107	7.9	160.8	9,107	11.3	160.8
G009.50%.40C.2U	Case 009	6,050	5.5	229.5	6,050	5.6	229.7	6,050	5.7	157.2	6,050	5.7	148.3	6,050	9.2	148.2
G019.50%.40C.1U	Case 019	5,284	2.8	202.8	5,284	2.9	203.2	5,284	3.1	134.5	5,284	3.1	128.3	5,284	6.5	128.2

Notes: Includes LPSH pegging to DA. Pegging steam removed after Vogt's Terminal Point.

Assumes a constant pressure drop of 3.45 bar across the LP FW CV for all

UEID - Description		83 - LP Economizer Outlet Hot Water Pegging to DA			102 - LP Economizer Outlet			66 - LP Economizer Inlet		
		Mass Flow	Pressure	Temp	Mass Flow	Pressure	Temp	Mass Flow	Pressure	Temp
VPI Case Name	Customer Case Name	kg/hr	bara	°C	kg/hr	bara	°C	kg/hr	bara	°C
G001.100%.33C.2U	Case 001	17,137	13.0	171.0	29,095	13.0	171.0	29,095	14.4	69.8
C001.100%.33C.2U	Case-01	17,505	12.4	166.7	27,982	12.4	166.7	27,982	13.7	70.1
C002.100%.33C.2U	Case-02	19,921	11.2	159.5	30,575	11.2	159.5	30,575	12.8	68.8
C003.100%.33C.1U	Case-03	25,000	9.0	144.9	34,964	9.0	144.9	34,964	11.0	67.5
C004.60%.33C.2U	Case-04	18,151	10.2	151.5	25,135	10.2	151.5	25,135	11.3	69.8
C005.100%.33C.2U	Case-05	18,027	12.4	168.0	30,224	12.4	168.0	30,224	13.9	70.1
G01N.100%.15C.2U	MKX20100001	23,004	12.9	166.6	34,775	12.9	166.6	34,775	14.9	67.8
G02N.100%.15C.2U	MKX20100015	24,600	11.7	161.1	36,684	11.7	161.1	36,684	14.0	70.9
G03N.60%.15C.2U	MKX20100016	25,000	9.1	139.9	32,140	9.1	139.9	32,140	10.8	68.4
G04N.50%.15C.2U	MKX20100002	19,674	9.9	148.2	26,185	9.9	148.2	26,185	11.1	69.4
G05N.100%.33C.2U	MKT20090001	19,739	12.4	165.2	30,022	12.4	165.2	30,022	13.9	72.1
G06N.100%.33C.2U	MKX20100003	25,000	11.1	155.3	35,504	11.1	155.3	35,504	13.2	71.6
G07N.60%.33C.2U	MKT20090002	19,118	10.2	150.6	26,003	10.2	150.6	26,003	11.3	70.7
G08N.60%.33C.2U	MKX20100004	25,000	8.9	138.6	31,906	8.9	138.6	31,906	10.6	70.2
G09N.50%.33C.2U	MKX20100005	18,636	9.7	147.3	24,884	9.7	147.3	24,884	10.7	70.3
G10N.50%.33C.2U	MKX20100006	25,000	8.4	134.5	31,257	8.4	134.5	31,257	10.0	70.0
G11N.100%.33C.2U	MKT20090003	19,555	13.0	169.6	31,358	13.0	169.6	31,358	14.6	72.4
G12N.100%.33C.2U	MKT20090004	24,316	11.7	161.2	36,294	11.7	161.2	36,294	13.9	71.8
G13N.100%.33C.2U	MKX20100007	25,000	12.3	167.5	37,286	12.3	167.5	37,286	14.6	104.9
G14N.100%.33C.2U	MKX20100008	17,232	13.0	171.4	29,159	13.0	171.4	29,159	14.4	76.0
G15N.100%.33C.2U	MKX20100009	22,356	11.8	162.8	34,454	11.8	162.8	34,454	13.8	74.9
G16N.100%.40C.1U	MKX20100010	15,783	9.5	154.6	27,096	9.5	154.6	27,096	10.8	59.6
G17N.100%.40C.1U	MKX20100011	20,255	8.8	147.5	31,841	8.8	147.5	31,841	10.5	58.8
G18N.100%.40C.2U	MKX20100012	18,174	11.8	161.8	27,119	11.8	161.8	27,119	13.0	74.3
G19N.100%.40C.2U	MKX20100017	24,401	10.5	151.2	33,320	10.5	151.2	33,320	12.4	74.1
G20N.60%.40C.2U	MKX20100018	25,000	8.6	137.1	31,572	8.6	137.1	31,572	10.3	73.3
G21N.50%.40C.2U	MKX20100013	16,478	9.5	148.6	22,566	9.5	148.6	22,566	10.4	72.5
G22N.100%.33C.2U	MKX20100019	25,000	10.9	162.1	37,737	10.9	162.1	37,737	13.3	104.9
G23N.100%.33C.2U	MKX20100020	25,000	11.0	162.3	37,711	11.0	162.3	37,711	13.4	104.9
G24N.100%.40C.2U	MKX20100021	25,000	9.8	153.8	34,546	9.8	153.8	34,546	11.9	104.9
G002.100%.33C.2U	Case 002	21,355	11.7	163.0	33,464	11.7	163.0	33,464	13.6	68.0
G003.100%.33C.2U	Case 003	17,217	12.4	166.7	27,477	12.4	166.7	27,477	13.6	70.3
G003B.100%.33C.2U	Case 003B	25,000	11.7	163.9	35,796	11.7	163.9	35,796	13.8	104.9
G003BE.100%.33C.2U	Case 003BE	25,000	10.3	158.0	36,271	10.3	158.0	36,271	12.5	104.9
G004.60%.33C.2U	Case 004	16,326	10.2	153.2	23,307	10.2	153.2	23,307	11.1	68.5
G004B.60%.33C.2U	Case 004B	25,000	9.6	150.2	32,286	9.6	150.2	32,286	11.4	104.9
G004BE.60%.33C.2U	Case 004BE	25,000	8.2	143.2	32,577	8.2	143.2	32,577	10.0	104.9
G005.60%.33C.2U	Case 005	18,035	10.7	155.3	25,699	10.7	155.3	25,699	11.9	69.5
G011.100%.33C.1U	Case 011	15,102	8.7	150.6	25,636	8.7	150.6	25,636	9.8	58.1
G013.100%.33C.1U	Case 013	16,009	8.3	146.0	25,229	8.3	146.0	25,229	9.4	59.0
G013B.100%.33C.1U	Case 013B	25,000	7.9	145.5	34,665	7.9	145.5	34,665	10.0	104.9
G014.60%.33C.1U	Case 014	13,814	7.0	134.2	20,007	7.0	134.2	20,007	7.7	56.6
G014B.60%.33C.1U	Case 014B	25,000	6.8	133.5	31,532	6.8	133.5	31,532	8.4	104.8
G015.60%.33C.1U	Case 015	15,915	7.4	136.0	22,713	7.4	136.0	22,713	8.2	58.1
G006.50%.33C.2U	Case 006	15,935	9.7	151.2	22,291	9.7	151.2	22,291	10.6	68.1
G006B.50%.33C.2U	Case 006B	25,000	9.2	148.1	31,617	9.2	148.1	31,617	10.9	104.9
G006BE.50%.33C.2U	Case 006BE	25,000	7.8	140.8	31,910	7.8	140.8	31,910	9.6	104.9
G016.50%.33C.2U	Case 016	13,645	6.8	132.7	19,264	6.8	132.7	19,264	7.4	57.2
G007.100%.12C.2U	Case 007	21,465	12.4	164.9	33,635	12.4	164.9	33,635	14.3	64.3
G008.100%.40C.2U	Case 008	17,114	11.3	160.8	26,221	11.3	160.8	26,221	12.5	72.9
G009.50%.40C.2U	Case 009	15,205	9.2	148.2	21,255	9.2	148.2	21,255	10.0	71.1
G019.50%.40C.1U	Case 019	15,622	6.5	128.2	20,906	6.5	128.2	20,906	7.3	62.9

Notes: Flows are per HRSG.

UEID - Description		58 - Heat Exchanger Hot Out (to HP/LP Feedwater Pumps)			57 - Heat Exchanger Hot In (from Deaerator)			71 - Heat Exchanger Cold Out (to Deaerator)			70 - Heat Exchanger Cold In (From Condensate)		
		Mass Flow	Pressure	Temp	Mass Flow	Pressure	Temp	Mass Flow	Pressure	Temp	Mass Flow	Pressure	Temp
VPI Case Name	Customer Case Name	kg/hr	bara	°C	kg/hr	bara	°C	kg/hr	bara	°C	kg/hr	bara	°C
G001.100%.33C.2U	Case 001	93,707	0.9	69.7	93,707	1.1	102.7	76,619	1.9	90.0	76,619	2.1	47.0
C001.100%.33C.2U	Case-01	90,439	0.9	70.0	90,439	1.1	102.7	72,984	1.9	90.0	72,984	2.1	46.8
C002.100%.33C.2U	Case-02	93,101	0.9	68.7	93,101	1.1	102.7	73,230	1.9	90.0	73,230	2.1	44.0
C003.100%.33C.1U	Case-03	98,214	0.9	67.4	98,214	1.1	102.7	73,113	1.9	90.0	73,113	2.1	39.6
C004.60%.33C.2U	Case-04	74,537	0.9	69.8	74,537	1.1	102.6	56,435	1.9	90.0	56,435	2.1	43.6
C005.100%.33C.2U	Case-05	94,839	0.9	70.1	94,839	1.1	102.7	76,862	1.9	90.0	76,862	2.1	47.0
G01N.100%.15C.2U	MKX20100001	99,198	0.9	67.7	99,198	1.1	102.7	76,244	1.9	86.1	76,244	2.1	37.7
G02N.100%.15C.2U	MKX20100015	104,697	0.9	70.9	104,697	1.1	102.8	80,147	1.9	87.5	80,147	2.1	43.0
G03N.60%.15C.2U	MKX20100016	88,131	0.9	68.4	88,131	1.1	102.7	62,948	1.9	88.9	62,948	2.1	37.7
G04N.50%.15C.2U	MKX20100002	73,885	0.9	69.4	73,885	1.1	102.6	54,261	1.9	89.3	54,261	2.1	40.9
G05N.100%.33C.2U	MKT20090001	92,703	0.9	72.1	92,703	1.1	102.7	73,014	1.9	88.5	73,014	2.1	46.8
G06N.100%.33C.2U	MKX20100003	102,044	0.9	71.5	102,044	1.1	102.7	77,058	1.9	88.2	77,058	2.1	44.0
G07N.60%.33C.2U	MKT20090002	75,585	0.9	70.7	75,585	1.1	102.6	56,517	1.9	89.5	56,517	2.1	43.7
G08N.60%.33C.2U	MKX20100004	86,533	0.9	70.1	86,533	1.1	102.6	61,428	1.9	89.8	61,428	2.1	40.8
G09N.50%.33C.2U	MKX20100005	70,878	0.9	70.2	70,878	1.1	102.6	52,292	1.9	89.9	52,292	2.1	42.9
G10N.50%.33C.2U	MKX20100006	82,291	0.9	69.9	82,291	1.1	102.6	57,174	1.9	90.4	57,174	2.1	40.0
G11N.100%.33C.2U	MKT20090003	96,351	0.9	72.3	96,351	1.1	102.7	76,846	1.9	88.3	76,846	2.1	47.4
G12N.100%.33C.2U	MKT20090004	104,921	0.9	71.7	104,921	1.1	102.8	80,655	1.9	87.8	80,655	2.1	44.6
G13N.100%.33C.2U	MKX20100007	102,260	1.0	100.3	102,260	1.2	104.8	72,856	1.9	46.7	72,856	2.1	46.7
G14N.100%.33C.2U	MKX20100008	94,164	0.9	76.0	94,164	1.1	102.7	76,982	1.9	89.9	76,982	2.1	54.5
G15N.100%.33C.2U	MKX20100009	105,300	0.9	74.8	105,300	1.1	102.8	82,993	1.9	89.2	82,993	2.1	51.0
G16N.100%.40C.1U	MKX20100010	93,074	0.9	59.5	93,074	1.1	102.7	77,341	1.9	94.8	77,341	2.1	40.2
G17N.100%.40C.1U	MKX20100011	103,675	0.9	58.8	103,675	1.1	102.8	83,470	1.9	94.6	83,470	2.1	37.3
G18N.100%.40C.2U	MKX20100012	87,210	0.9	74.3	87,210	1.1	102.6	69,086	1.9	89.9	69,086	2.1	51.2
G19N.100%.40C.2U	MKX20100017	98,432	0.9	74.1	98,432	1.1	102.7	74,081	1.9	89.6	74,081	2.1	48.6
G20N.60%.40C.2U	MKX20100018	84,241	0.9	73.3	84,241	1.1	102.6	59,247	1.9	91.0	59,247	2.1	46.0
G21N.50%.40C.2U	MKX20100013	67,291	0.9	72.5	67,291	1.1	102.5	50,863	1.9	90.9	50,863	2.1	48.0
G22N.100%.33C.2U	MKX20100019	106,521	1.0	100.5	106,521	1.2	104.8	76,166	1.9	43.7	76,166	2.1	43.7
G23N.100%.33C.2U	MKX20100020	102,698	1.0	100.3	102,698	1.2	104.8	73,422	1.9	50.1	73,422	2.1	50.1
G24N.100%.40C.2U	MKX20100021	99,939	1.0	100.2	99,939	1.2	104.8	70,309	1.9	47.9	70,309	2.1	47.9
G002.100%.33C.2U	Case 002	99,891	0.8	68.0	99,891	1.0	100.9	78,586	1.9	89.0	78,586	2.1	42.0
G003.100%.33C.2U	Case 003	88,833	0.9	70.2	88,833	1.1	102.7	71,665	1.9	90.0	71,665	2.1	47.0
G003B.100%.33C.2U	Case 003B	98,065	1.0	98.8	98,065	1.0	98.8	68,815	1.9	46.0	68,815	1.9	46.0
G003BE.100%.33C.2U	Case 003BE	100,565	1.0	99.0	100,565	1.2	104.4	70,205	1.9	40.0	70,205	2.1	40.0
G004.60%.33C.2U	Case 004	72,608	0.9	68.5	72,608	1.1	102.6	56,331	1.9	91.0	56,331	2.1	44.0
G004B.60%.33C.2U	Case 004B	81,658	1.0	99.3	81,658	1.0	99.3	53,082	1.9	43.0	53,082	1.9	43.0
G004BE.60%.33C.2U	Case 004BE	84,661	1.0	99.5	84,661	1.2	104.8	55,007	1.9	37.0	55,007	2.1	37.0
G005.60%.33C.2U	Case 005	78,826	0.9	69.4	78,826	1.1	102.6	60,840	1.9	90.0	60,840	2.1	44.0
G011.100%.33C.1U	Case 011	92,005	1.0	58.1	92,005	1.2	104.4	76,953	1.9	96.0	76,953	2.1	40.0
G013.100%.33C.1U	Case 013	89,045	1.0	58.9	89,045	1.2	104.4	73,085	1.9	96.0	73,085	2.1	40.0
G013B.100%.33C.1U	Case 013B	98,485	1.1	101.4	98,485	1.1	101.4	67,661	1.9	39.0	67,661	1.9	39.0
G014.60%.33C.1U	Case 014	70,417	1.0	56.6	70,417	1.2	104.3	56,653	1.9	98.0	56,653	2.1	38.0
G014B.60%.33C.1U	Case 014B	82,050	1.0	100.8	82,050	1.0	100.8	52,305	1.9	38.0	52,305	1.9	38.0
G015.60%.33C.1U	Case 015	77,008	1.0	58.0	77,008	1.2	104.3	61,144	1.9	97.0	61,144	2.1	38.0
G006.50%.33C.2U	Case 006	68,412	0.9	68.1	68,412	1.1	102.5	52,527	1.9	91.0	52,527	2.1	43.0
G006B.50%.33C.2U	Case 006B	77,816	1.0	99.1	77,816	1.0	99.1	49,442	1.9	42.0	49,442	1.9	42.0
G006BE.50%.33C.2U	Case 006BE	80,821	1.0	99.3	80,821	1.0	99.3	51,464	1.9	37.0	51,464	1.9	37.0
G016.50%.33C.2U	Case 016	66,436	0.9	57.2	66,436	1.1	102.5	52,841	1.9	98.0	52,841	2.1	38.0
G007.100%.12C.2U	Case 007	98,220	0.8	64.3	98,220	1.0	100.9	76,806	1.9	88.0	76,806	2.1	36.0
G008.100%.40C.2U	Case 008	85,917	0.9	72.8	85,917	1.1	102.6	68,853	1.9	91.0	68,853	2.1	51.0
G009.50%.40C.2U	Case 009	65,504	0.9	71.1	65,504	1.1	102.5	50,349	1.9	92.0	50,349	2.1	48.0
G019.50%.40C.1U	Case 019	66,177	1.0	62.8	66,177	1.2	104.3	50,605	1.9	98.0	50,605	2.1	43.0

Notes: Flows are per HRSG. The highlighted cells are for HX Bypass cases where the Hot flow does not pass through the HX. This is why you do not see a pressure or temperature drop from the Hot in to the Hot out, nor a temperature drop from the Cold in to the Cold out.

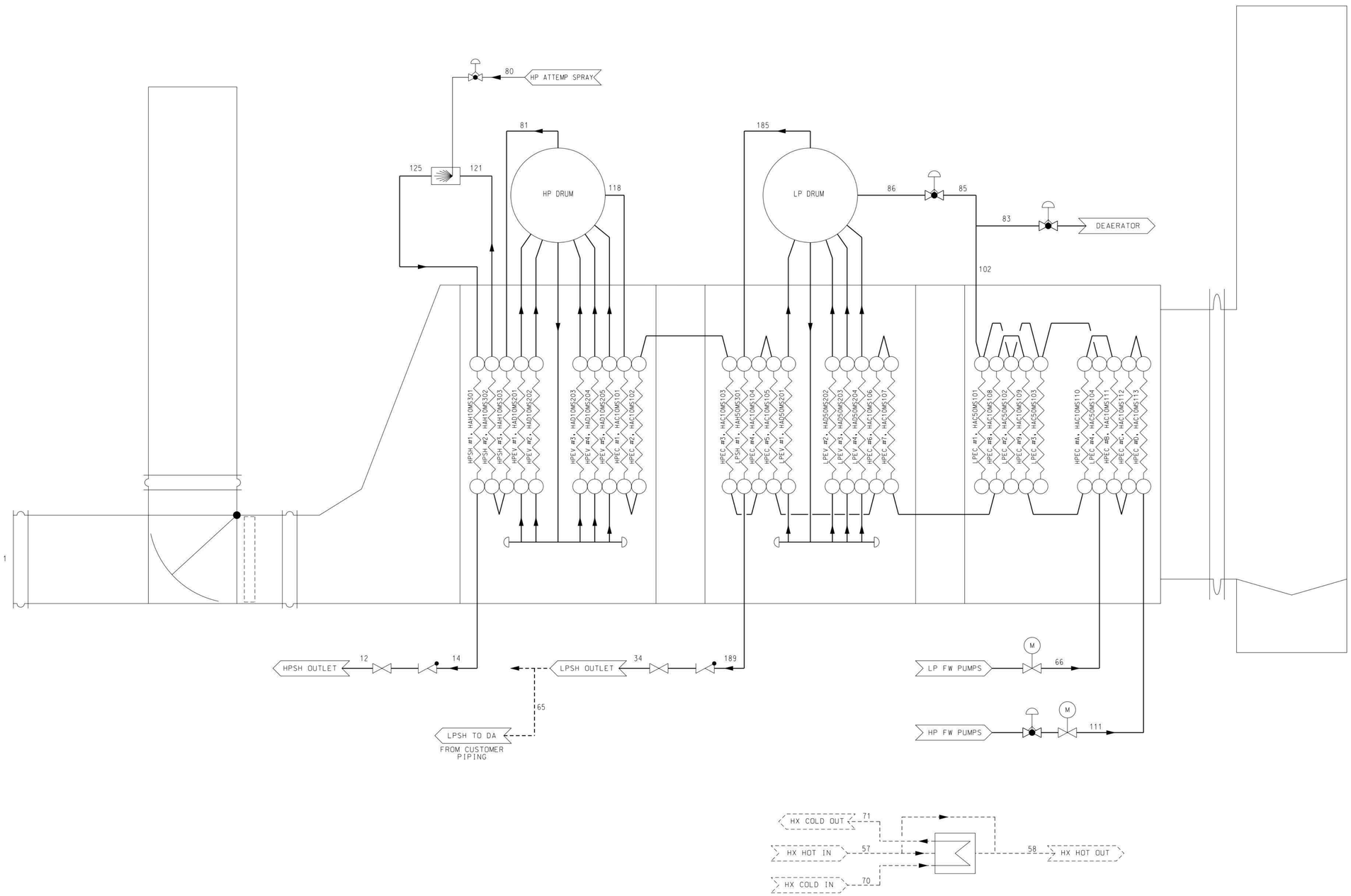

REFERENCE DRAWINGS:

V17460-ICND-001 (ABPR2-M-S-PD-0135)- P&ID LEGEND & GENERAL NOTES
V17460-ICND-002 (ABPR2-M-S-PD-0136)- FLUE GAS
V17460-ICND-003 (ABPR2-M-S-PD-0137)- HIGH PRESSURE P&ID
V17460-ICND-004 (ABPR2-M-S-PD-0138)- LOW PRESSURE P&ID
V17460-ICND-005 (ABPR2-M-S-PD-0139)- DA, STORAGE TANK & HEAT EXCHANGER P&ID
V17460-ICND-006 (ABPR2-M-S-PD-0140)- BLOWDOWN, SILENCERS, PSV VENTS & DRAINS P&ID
V17460-ICND-010 (ABPR2-M-S-PD-0141)- PROCESS FLOW DIAGRAM FOR HRSG

Rev.	Description	Date	Drawn	Chkd. 1	Chkd. 2	Appr.
05						
04						
03						
02	CUSTOMERS COMMENTS	04-APR-12	GRP	KH		DP
01	REVISE TITLE BLOCK	31-AUG-11	SK	GRP		DP
00	FIRST ISSUE	27-JUN-11	RN	GRP		DP

Revisions

This drawing contains Vogt Power International's confidential and proprietary information and cannot be used, duplicated or disclosed in whole or in part, except with the express written permission of Vogt Power International.
EXCEPT AS EXPRESSLY STATED IN ANY WRITTEN CONTRACT - ALL WARRANTIES RELATING TO THIS DRAWING, INCLUDING THE WARRANTIES OF MERCHANTABILITY AND FITNESS, ARE DISCLAIMED.
©Vogt Power International, Inc. all rights reserved as an unpublished work.

OWNER

Amata B. Grimm Power (Rayong) 2 Limited

PROJECT

ABPR2 Combined Cycle Cogeneration Plant Project

CONTRACTOR

Sumitomo Corporation

TITLE

PROCESS FLOW DIAGRAM

PROJECT CONTROL NO. ABPR2-M-S-HA-0141 REV. 2

Vogt Power International
4000 DuPont Circle
Louisville, Ky. 40207 USA
www.VogtPower.com

3rd ANGLE PROJECTION

Scale: NONE

Internal Drawing Status	Size	Drawing No.	Rev.
FOR RECORD	A1	V17460-ICND-010	02

VOGT POWER INTERNATIONAL

For Construction / Fabrication

Hugle, Kathy | Apr-11-2012

5.0 START- UP PROCEDURE

Please see document numbers V17460-DENE-001, “Start Up and Shut Down Procedure”, and V17460-ICNF-001 “HRSG Control System Philosophy Description”, attached.

START-UP AND SHUTDOWN PROCEDURE DESCRIPTION

FOR

SPP COMPANY

FOR

Vogt Power International Job 17460 (AMATA Project)

VOGT POWER INTERNATIONAL DOCUMENT NO. V17460-DENE-001

Prepared By: **George Zhan (I & C Engineer)**

Reviewed By: **Kathy Hugle (Project Engineer)**

Mark Fisher (Manager of I&C Engineering)

HRSG START-UP AND SHUTDOWN PROCEDURE

REVISION RECORD

Revision	Date	Engineer	Description	Pages Revised
0	08/04/11	George Zhan	Initial Issue	
1	02/14/13	George Zhan	Customer Comments	

HRSG START-UP AND SHUTDOWN PROCEDURE

TABLE OF CONTENTS

1.0 GENERAL START-UP CONSIDERATIONS 4

2.0 START UP PREREQUISITES AND REQUIREMENTS 5

3.0 START UP RECOMMENDATIONS 6

4.0 START-UP PROCEDURE: VALVE ALIGNMENT AND USE 7

5.0 START-UP PROCEDURE: HRSG AND SUB-SYSTEM SEQUENCE OF EVENTS 8

6.0 SHUTDOWN PROCEDURE FOR HRSG 10

7.0 GENERAL NOTES 10

8.0 REFERENCES 11

9.0 ABBREVIATIONS 11

APPENDIX A - RECOMMENDED VALVE POSITION LIST FOR START-UP OF HRSG 12

APPENDIX B – START-UP CURVES FOR ALL OPERATING CYCLES 18

1.0 GENERAL START-UP CONSIDERATIONS

1.1 The start-up procedure outlines the required actions in order to bring the HRSG and its associated sub-systems on line and to bring the HRSG to normal operation. The start-up process depends on thermodynamic system characteristics and we need to consider some factors to avoid producing stresses that will have influences on the lifetime of HRSG. When the HRSG is started-up, some protection systems are important to protect HRSG to reach normal operation during start-up. The SPP Amata Nakorn Combined Cycle Project is 2 on 2 configurations consisting of two combustion turbine generators (CTG), two heat recovery steam generators (HRSG) and one steam turbine**.**

1.2 Traditionally, there is a distinction between HRSG cold (C), warm (W), and hot (H) start-ups. Those start-ups differ from each other by the time elapsed after preceding plant shutdown and, what is more important, by the initial conditions of HP steam drum water prior to the start-up. We increase the HP drum pressure to reach normal operation according to maximum allowable temperature and pressure ramp curves during start-up.

The consideration below is given to three basic types of start-ups:

Cold (type C)–When the initial HP drum pressure: (**0 barg≤HP Drum Pressure≤ 13.789 barg**);
When the initial HP drum temperature at 70 °F **(21.11℃)**

Warm (type W) – When the initial HP drum pressure: (**13.789 barg ≤HP Drum Pressure≤ 48.263barg**);
When the initial HP drum temperature at 388 °F **(197.78℃)**

Hot (type H) - When the initial HP drum pressure: (**48.263barg ≤HP Drum Pressure**).
When the initial HP drum temperature at 505 °F **(262.78℃)**

1.3 For any start-up cycle the ramp in CTG load and/or HP drum pressure should be controlled in order to produce a ramp rate of **11.11℃/min** of HP drum water temperature for cold start-up,warm and hot start-up. This ramp rate must be applied to start-up cycles only. This start-up ramp rate shall apply to HRSG Cycle until the Drum pressure reaches a full operational pressure **(80.724barg)** at steady state Conditions corresponding to CTG load. When gas turbine is on and HRSG is started, the Diverter Damper needs to be opened gradually according to the drum temperature ramp rate control. (Please reference: File V17460-ICNF-001). Please note, that the HP Drum water temperature ramp rate is calculated using saturation temperature corresponding to the measured saturation Drum pressure.

1.4 To streamline the whole process it is reasonable to identify the initial and end points of start-up in the following manner:

For the purposes of this start-up procedure, the initial point of the HRSG start-up is the gas turbine ignition, when the heat input to the HRSG begins. It is understood that some preparation work needs to be done prior to this point (see Section 1.2 below). In the start-up cycle curves of Appendix B, this initial point of start-up is considered time = 0 minutes.

At the end point of the HRSG start-up the following conditions are in place:

1.4.1 All Drums have also reached a constant, stable pressure and the drum water levels are successfully being maintained at NWL by feedwater controller.

1.4.2 Steam outlet parameters of pressure, temperature, and mass flow have reached a constant and steady measurement.

1.4.3 Check and Isolation valves in main steam lines (HP and LP) are open. It is allowable to open the valves from the very beginning of the start-up of the HRSG.

1.4.4 Superheated steam (HP and LP) can be piped to the STG bypasses or to the STG itself - once the corresponding system is ready.

1.4.5 All start-up vent valves (HP and LP) are fully closed.

1.4.6 Feedwater should be supplied to steam drums (HP and LP) with drum level control valves (CV) on “Auto”.

1.4.7 Intermittent blowdown cycles (HP and LP) should be completed. Consult the water chemistry expert for appropriate instructions.

1.4.8 Continuous blowdown systems (HP and LP) should be ready for operation.

1.4.9 Isolation valves in water/steam supply lines to attemperators are operational - with steam temperature CVs on “Auto”. Isolation valves will automatically be opened prior to opening of CVs.

2.0 START UP PREREQUISITES AND REQUIREMENTS

2.1 HRSG sub-systems and Power Plant main systems and equipment are operational and ready to support the boiler start-up.

2.2 All valves for instrumentation isolation (pressure gauges, drum level gauges, flow element pressure differential gauges, etc.) must be open to allow for proper measurement and control of the HRSG. Please refer to the P&ID drawings for normal valve position settings during steady operation.

2.3 Initial water levels in the drums depend on the drum steam pressure prior to the start-up.
Water levels in the drums should have a permissive for GT light-off.
For cold start up, initial water level is (reference to NWL):

HP Drum: -14 inch **(-355.6mm);**
LP Drum: -0.48 inch **(-12.192mm).**

2.4 During start-up of the HRSG, the HP drum saturation temperature must be controlled to a **11.11 ℃/min** ramp rate for C start-up and W / H start-ups as defined in start-up curve Figures B.1 through B.4 for C, W, and H start-ups, respectively (in Appendix B). These curves define the most rapid time allowable to reach full plant load.

3.0 START UP RECOMMENDATIONS

3.1 During start-up, it is reasonable to have the plant condenser on-line as soon as possible. The STG bypass system and plant condenser must be online if a CTG is loaded above 25% baseload because the HP start-up vent valve has not been designed to handle flows above this CTG load point. Therefore, a delay in HRSG start-up curve may be required when cold starting a single CTG with the STG off-line. Minimum HRSG steam pressure ("floor" pressure) has been established by an agreement between the customer and VPI for the HP and LP drums.

3.2 The main priority during the HRSG start-up should always be the metal temperature condition in the HP drum. HRSG start-up is not limited by metal temperatures in the HP superheater modules. The LP sections are not a concern. The HP attemperator outlet steam temperature should be maintained **13.89℃** above saturation temperature during start up. The HP attemperator outlet steam temperature should be maintained **27.78℃** above saturation temperature during normal operation.

3.3 The HRSG is equipped with inter-stage attemperators in HP SH sections to control final steam temperature to the STG. The HP inter-stage attemperator outlet steam temperature setpoint is low limited to a minimum of 50 ℉ 27.78℃ above the steam saturation temperature (Tsat) in order to prevent steam condensation in the steam attemperator piping. During start-up, steam from the HRSG

may be used to warm steam lines and the STG itself. In these situations, the final steam temperature from the HRSG may greatly exceed the maximum temperature allowed for STG warming. The HRSG may not be able to adequately attemperate final steam temperature without violating the ≥ Tsat+ 50℉ 27.78℃ superheat requirement. In these transient operations, it may be possible to modulate CTG load in order to produce an acceptable final steam temperature out of the HRSG and the degree of superheat downstream of attemperators can be as low as Tsat plus 30 ºF **(16.67 ºC).**

3.4 After the HRSG start-up the CVs in the BFP recirculation line to the HP and LP drum should be controlled per the pump manufacturer's requirements.

3.5 After the HRSG is running at normal operation and some trip signals to HRSG come, the Diverter Damper needs to be closed. If the Diverter Damper is failure to be closed, the gas turbine trips.

3.6 Refer to VPI document V17460-ICNF-001, "HRSG CONTROL SYSTEMS PHILOSOPHY DESCRIPTION" for a thorough explanation of control system operation during start-up.

4.0 START-UP PROCEDURE: VALVE ALIGNMENT AND USE

4.1 Recommended position and operating conditions of all HRSG valves required during start-up are outlined in Table A.1 in Appendix A.

4.2 For any HRSG cold, warm, or hot start-up, the following general valve positions should be followed. Any special valve treatments for a cold, warm or hot start-up will also be discussed.

4.2.1 All feedwater inlet pipeline vents and drains shall remain closed during any start-up cycle.

4.2.2 All Economizer and Evaporator drains shall be closed. During start-up, it is not recommended to open the EV intermittent blowdown valve (IBD) or drum continuous blowdown valve (CBD) for water purity control. However, the IBD may be used to help control drum water level during start-up.

4.2.3 All Economizer manual vents should be closed except for those listed as normally open on the P&ID drawings. The EC vent header pipe MOV shall be in "Auto" and will open when steaming conditions are measured in the EC section.

4.2.4 No manual blowdown valves of drum level gauges shall be opened during start-up. No chemical feed valves shall admit flow into any drum during start-up.

4.2.5 HP superheater drains under DCS control should be set to “Auto” and automatically open to drain any condensate formed prior to start-up. All LP SH low point drains should be opened momentarily to drain any condensate which may be present. Automatic drain pot valve downstream of the HP attemperator, is used to prevent condensation from damaging the HP Superheater during startup and/or upset conditions.

4.2.6 All HP Superheater attemperator loop is equipped with condensate pots. They should automatically open to drain any condensate formed prior to start-up.

4.2.7 All HP SH high point vents and drum vents shall remain closed during start-up if the pressure prior to start-up is greater than 50 psig **(3.45barg**). However if it is suspected that air may have infiltrated into the HRSG system, the high point vent should be opened to purge the steam volume. If the system pressure is less than 25 psig **(1.724barg)** prior to start-up, the HP SH vents and drum vents shall be kept open until the system pressure builds to over 25 psig **(1.724barg)**.

4.2.8 The HP Steam produced shall be bypassed to the condenser. Either the HP start-up vent valve or the HP bypass valve shall be used to control system pressures to allow proper saturation temperature ramp of the HP drum. The HP bypass should be initiated as soon as possible to provide cooling flow to the tubes, in order to avoid overheating and/or thermal shock.

4.2.9 If the plant condenser is off-line prior to start-up of a HRSG, any steam generated shall be vented to atmosphere by the start-up vents. The main steam MOV outlet stop valve on LP and HP shall remain closed until sufficient operational margins have been established. Opening this valve with little or negative margins may cause undesirable chattering of the steam outlet check valve. If there is sufficient backpressure on the steam outlet stop valve (due to a hot start), or the STG bypass system is in operation, the MOV stop valve may be opened immediately after successful ignition of the CTG. In this manner, steam vented to atmosphere can be minimized.

5.0 START-UP PROCEDURE: HRSG AND SUB-SYSTEM SEQUENCE OF EVENTS

5.1 Make sure the water level in the drums (HP and LP) is at a start-up level for the type of start-up; hot, warm, or cold. The warm and hot start-up levels in the drums (HP and LP) are based on drum pressure. When the drum pressure is increased, the initial start-up level for warm and hot is close to “0” inch.

5.2 Start the boiler feedwater pump using the recirculation-line available. After the boiler feedwater pump is on-line, place the water flow control valve in the recirculation-line on “Auto”. The setpoint (water flow) for the correspondent controller should be established in accordance with the minimum flow recommendations of the boiler feedwater pump supplier. Do not supply any feedwater to any HRSG drum yet. Also, do not initiate any feedwater extractions from upstream or downstream of the economizers. A reasonable sequence of actions is suggested below.

5.3 When HRSG start program permissive conditions are satisfied, start sequence control program executes.

5.4 Start and ramp the CTG according to its normal start-up scenario: purge, light-off, FSNL (if necessary), spinning reserve (if necessary), ramp to baseload. Before the CTG light-off, verify that all the requirements to the condensate and that feedwater quality are met (consult water professional).

5.5 Monitor the saturation pressure and temperature ramp rate in the HP drum. These rates are prescribed by the start-up curves (Figures B.1 through B.4). The ramp rates can be maintained by modulating the HP SH steam vent control valve and HP steam turbine bypass control valve.

5.6 To get the steam turbine bypasses (HP and LP) on-line their corresponding pressure set points have to be equal or slightly higher than the current pressure in the upstream main steam lines. Then, the pressure CVs in all Steam Turbine bypass lines should be place on “Auto”. Gradually close the Superheater start-up vent valves. CVs in steam turbine bypasses will take over the HP drum temperature ramp rate and Superheater outlet steam pressure control.

5.7 Watch the level position in the drums (HP and LP). The main subject of concern is the level in the HP drum. If the current level position becomes too close to the “High Level Alarm” use the MOVs in the evaporator IBD lines to decrease the level. Do not use the evaporator continuous blowdown system or manually operated valves in the evaporator drain lines for this purpose.

5.8 During start-up, the drum levels are established by single element control. As steam is generated and exits the drum, the single element control will maintain water level through drum swell and into continuous feedwater operation. When the steam flow rate is greater than 30% of the full load flow rate,

a three element, feedforward/feedback drum level control loop is used to control drum water levels at NWL.

5.9 When the HP drum pressure is equal to or greater than the minimum "floor" pressure, use the intermittent blowdown valves to improve the boiler water purity (remove the sludge). Consult a water professional to establish the appropriate criteria for this process (time period, valve position, decrease in water level position, etc.). Also consult a water professional for correspondent setpoints for the continuous blowdown of each drum.

6.0 SHUTDOWN PROCEDURE FOR HRSG

6.1 The maximum allowable shutdown rate for HP drum saturation temperature does not depend upon the type of start-up cycle during baseload operation.

6.2 The normal criterion for shutdown of the HRSG is to maintain a minimum temperature reduction in saturation temperature from maximum pressure in the HP drum prior to shutdown. Although it is considered impossible to maintain an near 0 ºC/min cool down for HP drum temperature during shutdown, the overall ramp rate averaged between maximum drum pressure prior to shutdown and minimum drum pressure prior to re-start must not significantly exceed limited shutdown temperature ramp rate requirement. The limited shutdown temperature ramp rate is 10 ºF/min **(5.56 ºC/min)** from maximum pressure at 100% GT load to HP drum pressure 0 barg.

6.3 When GT is off, stop program is activated. After stop program is activated, and the HP attemperator spray water block valves are closed.

7.0 GENERAL NOTES

7.1 Before the CTG light-off, verify that all the requirements to the condensate and that the feedwater quality are met (consult water professional).

7.2 At the end of the start-up verify that all the requirements of the saturated and superheated steam quality and purity, in all HRSG pressure levels, are met. Also verify the boiler water quality in the drums. If all the requirements of the customer specification are met (consult a water professional), it is allowable to supply steam to the STG.

7.3 Minimum HRSG steam pressure or the floor pressure in the drums is to be maintained by the plant control system with the help of the STG control valves or the STG bypass system. After the steam turbine is on-line, the HRSG can be in sliding pressure operation for a pressure range from the "floor" up

to the maximum pressure (MAWP) at the CTG base load. The corresponding logic should be incorporated into the plant DCS and dependent control systems (STG, CTG).

8.0 REFERENCES

V17460-ICND-001	P&ID Legend & General Notes
V17460-ICND-002	Flue Gas P&ID
V17460-ICND-003	High Pressure P&ID
V17460-ICND-004	Low Pressure P&ID
V17460-ICND-005	DA, Storage Tank, and Heat Exchanger P&ID
V17460-ICND-006	Blowdown, Silencers, PSV Vents & Drains P&ID
V17460-ICND-010	Process Flow Diagram
V17460-ICNF-001	HRSG CONTROL SYSTEMS PHILOSOPHY DESCRIPTION

9.0 ABBREVIATIONS

AT	–	approach temperature
BFP	–	boiler feedwater pump
CC	–	combined cycle
CND	–	plant steam condenser
CTG	–	combustion turbine generator
CV	–	control valve
DCS	–	distributed control system
EC	–	economizer
EV	–	evaporator
FSNL	–	full speed, no load
HP	–	high pressure
H/W	–	hot/warm start-up
LP	–	low pressure
MAWP	–	maximum allowable working pressure
MOV	–	motor operated valve
NWL	–	normal water level
O&M	–	operation & maintenance
PP	–	power plant
SH	–	superheater
STG	–	steam turbine generator

Appendix A

Recommended Valve Position List for Start-Up of HRSG

APPENDIX A– RECOMMENDED VALVE POSITION LIST FOR START-UP

LP SYSTEM STEAM AND WATER DRAINS		
Tag Number	**Description**	**Position**
LAB50AA501/ LAB50AA502/ LAB50AA503/ LAB50AA504 LAB50AA505/ LAB50AA506	LP Feedwater Inlet Pipe Drain	Closed
HAD50AA502/ HAD50AA503 HAD50AA504	LP Drum Water Column Drains	Closed
HAD50AA501	LP Continuous Blowdown Isolation	Open
HAC50AA504	LP Economizer # MS104 Drain	Closed
HAC50AA503	LP Economizer # MS103 Drain	Closed
HAC50AA502	LP Economizer # MS102 Drain	Closed
HAC50AA501	LP Economizer # MS101 Drain	Closed
HAC50AA505	LP Economizer Drain To Blowdown Tank Valve	Closed
HAD50AA201	LP Continuous Blowdown Control Valve	Set Up “Auto”
HAC50AA802	CHEM Feed to LP Drum Valves	Open
HAD50AA505	LP EV Intermittent Blowdown Valve	Open
HAD50AA102	LP EV Intermittent Blowdown Valve	Set to “Auto”
HAH50AA502/ HAH50AA503	LPSH Outlet Drain Pot Drain	Closed
HAH50AA504/ HAH50AA505	LPSH Outlet Drain Pot Drain	Closed
HAH50AA501	LPSH Outlet Drain Pot Drain	Open
HAH50AA202	LPSH Outlet Drain Pot Drain	Set to “Auto”
HAC50AA506/HAC50AA507	LP Feedwater Control Valve Drain Valve	Closed
HAH50AA002	LPSH Outlet Steam Stop Valve	Open
HAH50AA803/ HAH50AA804	LPSH Outlet Steam to Sample	Open
HAD50AA801/HAD50AA802	LP Drum Outlet Steam to Sample	Open
LP SYSTEM VENTS		
HAD50AA601	LP Drum Vent	Closed
HAD50AA101	LP Drum Vent	Set to “Auto”
HAC50AA604	LP Economizer MS104 Vent	Closed
HAC50AA603	LP Economizer MS103 Vent	Closed
HAC50AA602	LP Economizer MS102 Vent	Closed
HAC50AA601	LP Economizer MS101 Vent	Open
HAC50AA101	LP Economizer Vent	Set to “Auto”

HAH50AA003	LP Steam Start-Up Vent Valve	Open
HAH50AA102	LP Steam Start-Up Vent Control Valve	Set to “Auto”
LP SYSTEM OPERATIONAL VALVES		
HAC50AA201	LP Drum Level Control Valve	Closed at start-up. Set to “Auto” when Gas Turbine is On.
HAC50AA003	LP Feedwater Bypass Isolation Valve	Closed
HAD50AA801/HAD50AA802	LP Drum to Sample Isolation Valves	Open
LAB50AA101	LP Feedwater Stopl Valve	Open
HAC50AA001/ HAC50AA002	LP Drum Feedwater Isolation Valve	Open
HP SYSTEM STEAM AND WATER DRAINS		
LAB10AA501/ LAB10AA502	HP Feedwater Inlet Pipe Drain	Closed
LAB10AA503/ LAB10AA504	HP Feedwater Inlet Pipe Drain	Closed
LAB10AA505/ LAB10AA506	HP Feedwater Inlet Pipe Drain	Closed
HAC20AA513	HPEC MS113 Module Drain	Closed
HAC20AA512	HPEC MS112 Module Drain	Closed
HAC20AA511	HPEC MS111 Module Drain	Closed
HAC20AA510	HPEC MS110 Module Drain	Closed
HAC20AA509	HPEC MS109 Module Drain	Closed
HAC20AA508	HPEC MS108 Module Drain	Closed
HAC20AA507	HPEC MS107 Module Drain	Closed
HAC20AA506	HPEC MS106 Module Drain	Closed
HAC20AA505	HPEC MS105 Module Drain	Closed
HAC20AA504	HPEC MS104 Module Drain	Closed
HAC20AA503	HPEC MS103 Module Drain	Closed
HAC20AA502	HPEC MS102 Module Drain	Closed
HAC20AA501	HPEC MS101 Module Drain	Closed
HAC20AA514	HPEC Module Drain	Closed
HAC20AA515	HPEC Module Drain	Closed
HAC20AA516	HPEC Module Drain	Closed
HAH10AA504/HAH10AA505	HP SH Outlet Line Drain Valves	Closed
HAH10AA506/HAH10AA507	HP SH Outlet Line Drain Valves	Closed
HAD10AA502/ HAD10AA503/ HAD10AA504	HP Drum Water Column Drains	Closed
HAD10AA505	HP EV Intermittent Blowdown Valve	Open
HAD10AA103	HP EV Intermittent Blowdown Valve	Set to “Auto”
HAD10AA801/ HAD10AA802	HP DRUM Outlet Line To Sample Isolation Valve	Open
HAC21AA801	Chem Feed Line To HP Drum Stop Valves	Open

HAH10AA803/ HAH10AA804	HPSH Outlet Steam to Sample	Open
HAD10AA501	HP Continuous Blowdown Isolation	Open
HAD10AA201	HP Continuous Blowdown Control Valve	Set Up “Auto”
HAH10AA503	HP SH Steam Outlet Line Drain Valves	Open
HAH10AA204	HP SH Steam Outlet Line Drain Valves	Set to “Auto”
HAH10AA202	HPSH3-2 x-over Drain	Set to “Auto”
HAH10AA501	HPSH3-2 x-over Drain	Open
HAH10AA502	HPSH Inter stage Attemperator Drain Pot Drain	Open
HAH10AA203	HPSH Inter stage Attemperator Drain Pot Drain	Set to “Auto”
HP SYSTEM VENTS		
HAC20AA613	HP Economizer MS113 Vent	Closed
HAC20AA612	HP Economizer MS112 Vent	Closed
HAC20AA611	HP Economizer MS111 Vent	Closed
HAC20AA610	HP Economizer MS110 Vent	Closed
HAC20AA609	HP Economizer MS109 Vent	Closed
HAC20AA608	HP Economizer MS108 Vent	Closed
HAC20AA607	HP Economizer MS107 Vent	Closed
HAC20AA606	HP Economizer MS106 Vent	Closed
HAC20AA605	HP Economizer MS105 Vent	Closed
HAC20AA604	HP Economizer MS104 Vent	Closed
HAC20AA603	HP Economizer MS103 Vent	Closed
HAC20AA602	HP Economizer MS102 Vent	Closed
HAC20AA601	HP Economizer MS101 Vent	Open
HAC20AA101	HP Economizer Vent	Set to “Auto”
HAD10AA101	HP Drum Vent	Set to “Auto”
HAD10AA102	HP Drum Vent	Set to “Auto”
HAH10AA003	HPSH Outlet Startup Vent Isolation	Open
HAH10AA201	HPSH Outlet Startup Vent Valve	Set to “Auto”
HP SYSTEM OPERATIONAL VALVES		
LAB10AA201	HP Feedwater Control Valve	Closed at start-up. Set to “Auto” when Gas Turbine is On.
LAB10AA102	HP Feedwater Inlet Stop Valve	Open
LAB10AA001/ LAB10AA002	HP Drum Feedwater Isolation Valve	Open
LAB10AA004	HP Drum Feedwater Bypass Isolation Valve	Open

HAD10AA801/ HAD10AA802	HP Drum Sat Steam Sample	Open to Sampling System
LAE10AA005	HP Inter stage Attemperator Spray Valve Control Valve Bypass Stop Valve	Closed
LAE10AA001/ LAE10AA002/LAE10AA003	HP Inter stage Attemperator Spray Stop Valve	Open
LAE10AA101	HP Inter stage Attemperator Spray Stop Valve	Set to “Auto”
HAH10AA002	HP SH Outlet Stop Valve	Open
LAE10AA201	HP Inter stage Attemperator Spray Control Valve	Set to “Auto”
BLOWDOWN SYSTEM OPERATIONAL VALVES AND WATER DRAINS		
LCQ11AA504/ LCQ11AA505	Cooling Water To Water Plate Control Valve Drain Valves	Closed
LCQ10AA201	Cooling Water To Water Plate Control Valve	Set to “Auto”
LCQ11AA501/ LCQ11AA502	Blowdown Tank Level Gauge Drain	Closed
LCQ10AA501/ LCQ10AA502	Blowdown Tank Drain	Closed
LCQ10AA003	Cooling Water To Water Plate Bypass Stop Valve	Closed
LCQ10AA001/ LCQ10AA002	Cooling Water To Water Plate Stop Valve	Open
EXTERNAL DEAERATOR		
LAA10AA102	DA Vent Valve	Set to “Auto”
LAA10AA202	Customer LP Steam to DA Control Valve	Set to “Auto”
LAA10AA801	Chemical Feed To DA Isolation Valve	Open
LAA10AA005	LP ECON UNIT31to DA Bypass Stop Valve	Closed
LAA10AA003/ LAA10AA004/ LAA10AA001	LP ECON UNIT31to DA Stop Valve	Open
LAA10AA501/ LAA10AA502	LP ECON UNIT31 to DA Control Valve Drain Valves	Closed
LAA10AA201	LP ECON UNIT31 to DA Control Valve	Set to “Auto”
LAA10AA005	LP ECON UNIT32to DA Bypass Stop Valve	Closed
LAA10AA003/ LAA10AA004/ LAA10AA001	LP ECON UNIT32 to DA Stop Valve	Open

LAA10AA501/ LAA10AA502	LP ECON UNIT32 to DA Control Valve Drain Valves	Closed
LAA10AA201	LP ECON UNIT32 to DA Control Valve	Set to “Auto”
LAA10AA602	N2 System To DA Isolation Valve	Open
LAA11AA001/ LAA11AA002	COND Pumps to DA Isolation Valves	Open
LAA11AA003	COND Pumps to DA Bypass Isolation Valve	Closed
LAA11AA201	COND Pumps to DA Control Valve	Set to “Auto”
LAA10AA007/LAA10AA008/ LAA10AA009	HP Feedwater Pump Minimum Flow Line To DA Isolation Valve	Open
LAA10AA010/LAA10AA011/ LAA10AA012	LP Feedwater Pump Minimum Flow Line To DA Isolation Valve	Open

Appendix B

Start-Up and Shutdown Curves for All Operating Cycles

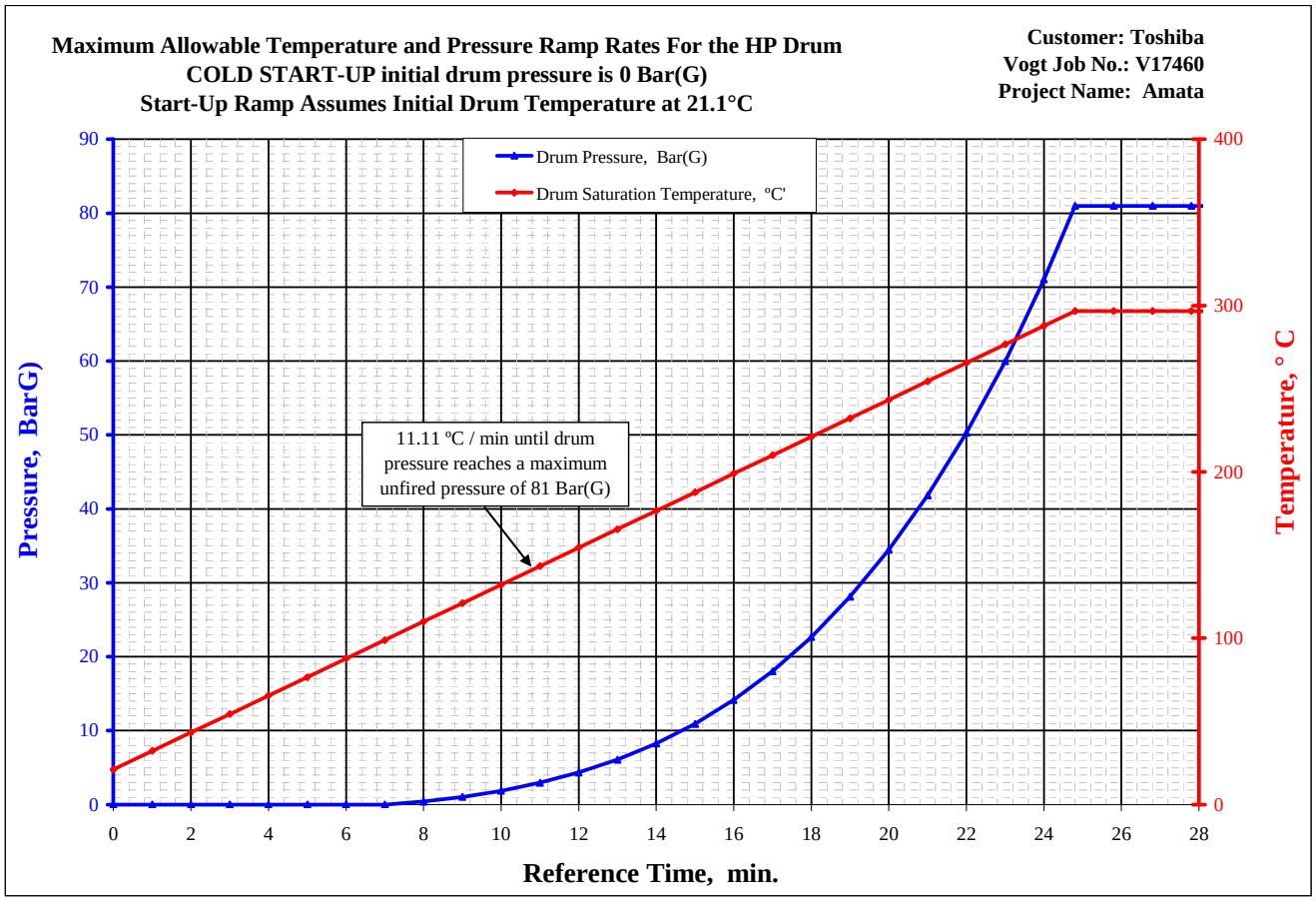
Maximum Allowable Temperature and Pressure Ramp Rates For the HP Drum
COLD START-UP initial drum pressure is 0 Bar(G)
Start-Up Ramp Assumes Initial Drum Temperature at 21.1°C
Customer: Toshiba
Vogt Job No.: V17460
Project Name: Amata
Drum Pressure, Bar(G)
Drum Saturation Temperature, ºC'
11.11 ºC / min until drum pressure reaches a maximum unfired pressure of 81 Bar(G)
Pressure, BarG)
Temperature, ° C
Reference Time, min.
0
10
20
30
40
50
60
70
80
90
100
200
300
400
0
2
4
6
8
10
12
14
16
18
20
22
24
26
28

Maximum Allowable Temperature and Pressure Ramp Rates For the HP Drum
WARM START-UP, initial drum pressure greater than 13.789 Bar(G)
Start-Up Ramp Assumes Initial Drum Temperature at 197.8°C

Customer: Toshiba
Vogt Job No.: V17460
Project Name: Amata

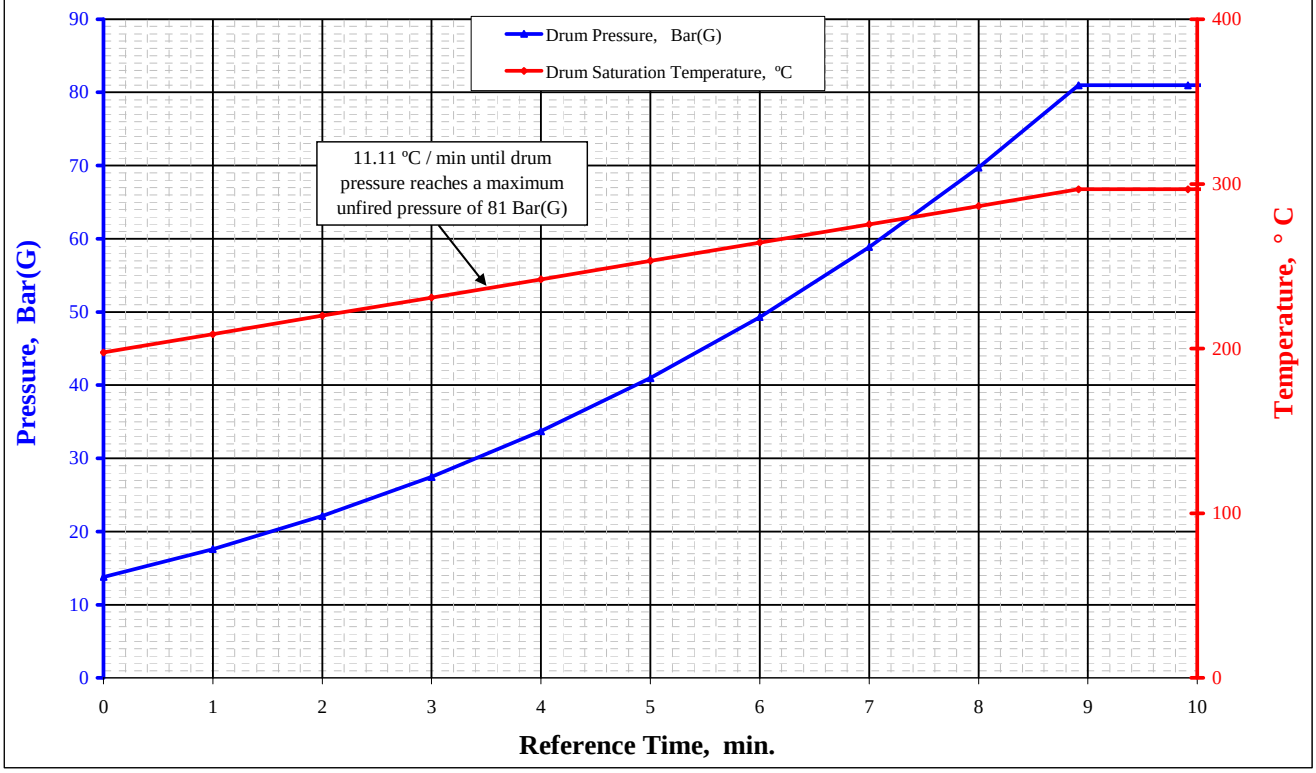

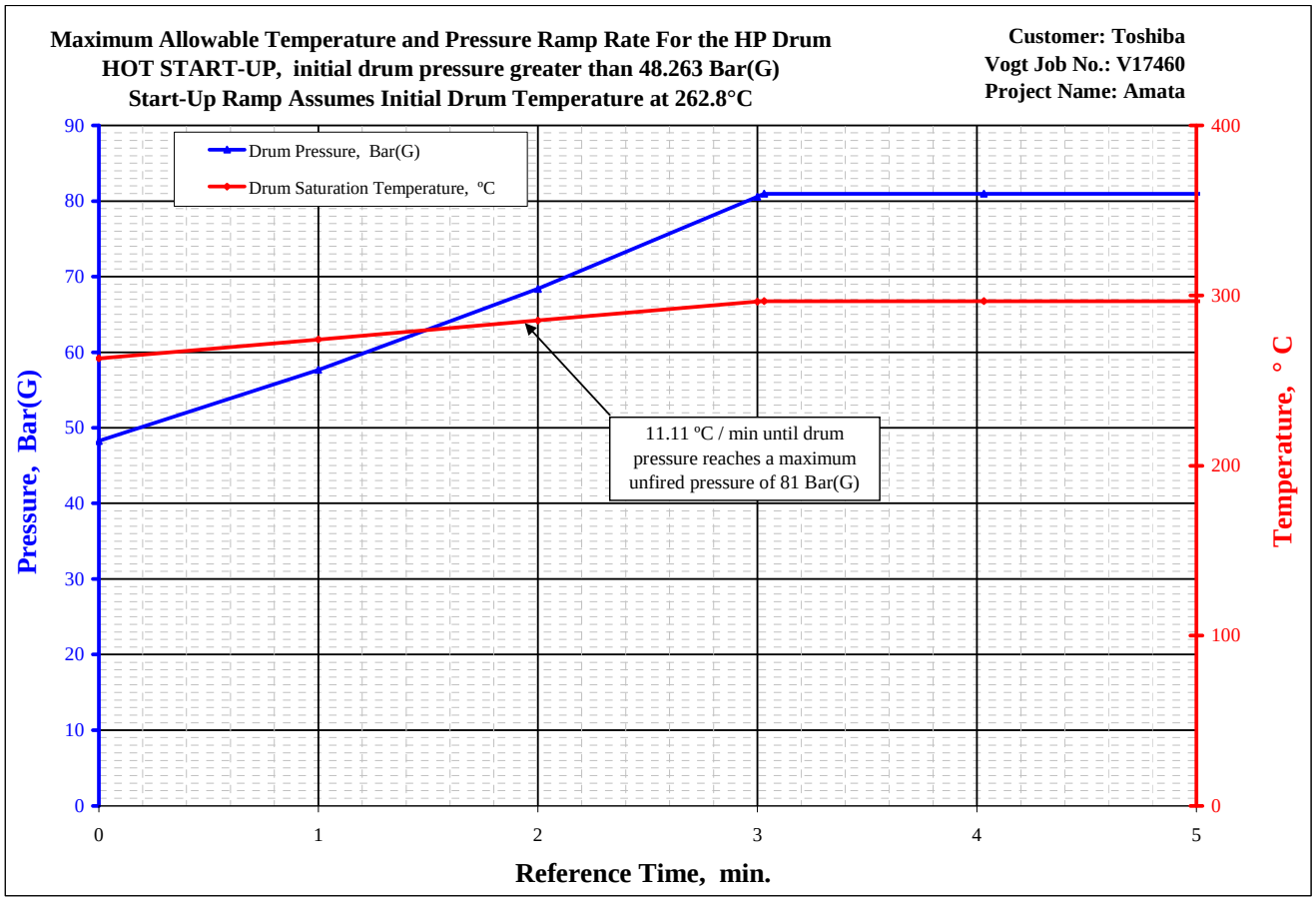
Maximum Allowable Temperature and Pressure Ramp Rate For the HP Drum
HOT START-UP, initial drum pressure greater than 48.263 Bar(G)
Start-Up Ramp Assumes Initial Drum Temperature at 262.8°C
Customer: Toshiba
Vogt Job No.: V17460
Project Name: Amata
Drum Pressure, Bar(G)
Drum Saturation Temperature, ºC
11.11 ºC / min until drum pressure reaches a maximum unfired pressure of 81 Bar(G)
Pressure, Bar(G)
Temperature, ° C
Reference Time, min.
0
10
20
30
40
50
60
70
80
90
100
200
300
400
1
2
3
4
5

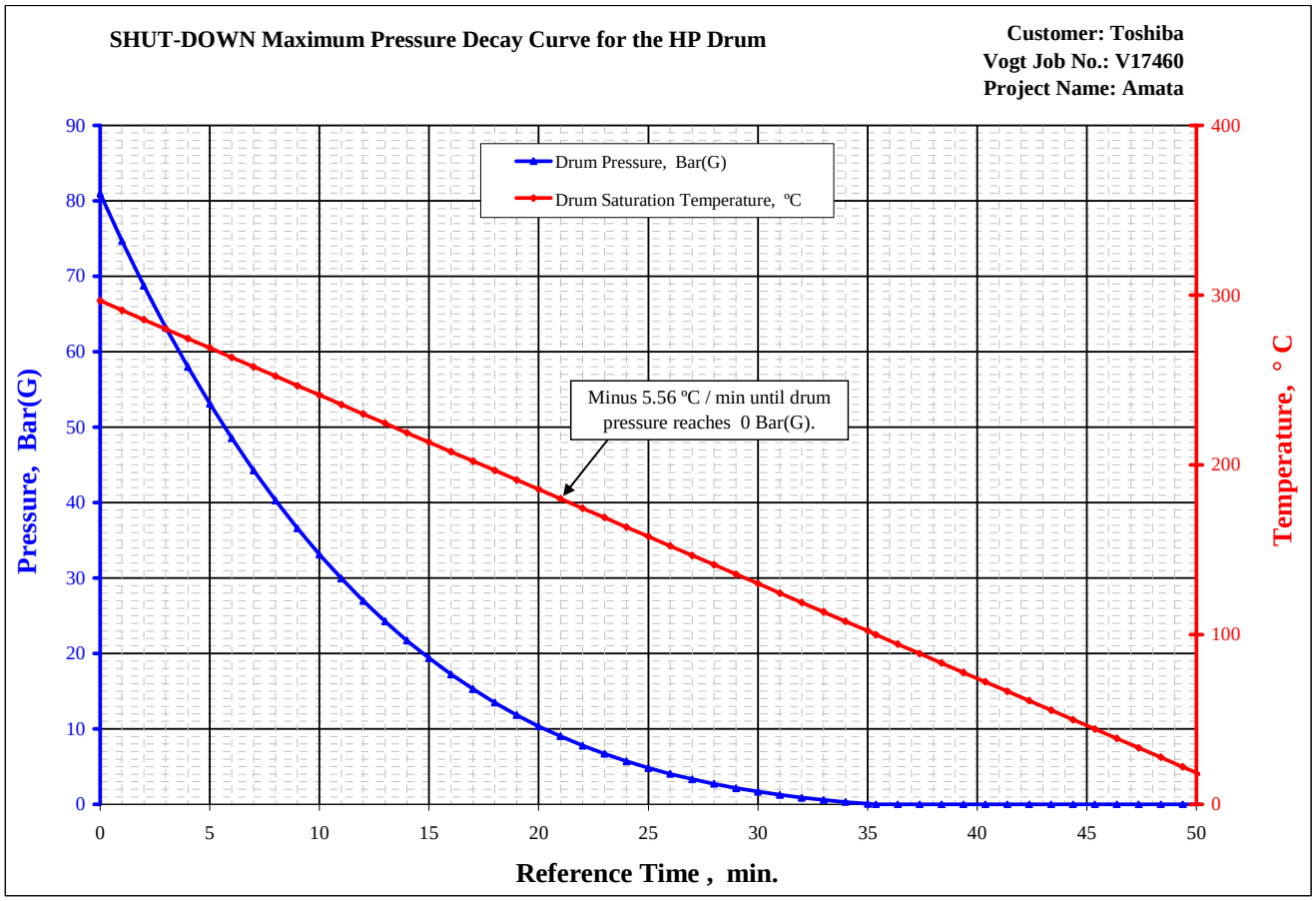
SHUT-DOWN Maximum Pressure Decay Curve for the HP Drum
Customer: Toshiba
Vogt Job No.: V17460
Project Name: Amata
Drum Pressure, Bar(G)
Drum Saturation Temperature, ºC
Minus 5.56 ºC / min until drum pressure reaches 0 Bar(G).
Pressure, Bar(G)
Temperature, ° C
Reference Time , min.
0
10
20
30
40
50
60
70
80
90
100
200
300
400
5
15
25
35
45

HRSG CONTROL SYSTEM PHILOSOPHY DESCRIPTION

FOR

TPSC

FOR

Vogt Power International Job 17460 (SSP Amata City 2 CCCP)

VOGT POWER INTERNATIONAL DOCUMENT NO. V17460-ICNF-001

OWNER		
Amata B. Grimm Power (Rayong) 2 Limited		
PROJECT		
ABPR2 Combined Cycle Cogeneration Plant Project		
CONTRACTOR		
Sumitomo Corporation		
TITLE		
HRSG CONTROL SYSTEMS PHILOSOPHY DESCRIPTION		
PROJECT CONTROL NO.	ABPR2-K-S-HA-2002	REV. 2

Prepared By: **George Zhan (I & C Engineer)**

Reviewed By: **Damon Blissett (Project Lead I & C Engineer)**
Kathy Hugle (Project Engineer)
Mark Fisher (Manager of I & C Engineer)

HRSG CONTROL SYSTEM PHILOSOPHY DESCRIPTION
AND START-UP AND SHUTDOWN PROCEDURE
REVISION RECORD

Revision	Date	Engineer	Description	Pages Revised
0	08/04/11	George Zhan	Initial Issue	
1	09/26/11	George Zhan	Customer Comments	
2	07/18/12	George Zhan		Page 8

HRSG CONTROL SYSTEM PHILOSOPHY DESCRIPTION
TABLE OF CONTENTS

1.0 HRSG INTERLOCKS, ALARMS & SIGNALS MONITORING PER NFPA 85 5

2.0 HP DRUM LEVEL CONTROL 10

3.0 LP DRUM LEVEL CONTROL 14

4.0 HP DRUM LEVEL REMOTE LEVEL INDICATION PER ASME BOILER CODE 17

5.0 LP DRUM LEVEL REMOTE LEVEL INDICATION PER ASME BOILER CODE 18

6.0 HP SUPERHEATER MAIN STEAM TEMPERATURE CONTROL 18

7.0 HP SH STEAM START UP VENT CONTROL 20

8.0 CONTROL OF HP BYPASS FOR HP DRUM TEMPERATURE RAMP RATE 21

9.0 DIVERT DAMPER CONTROL 22

10.0 LP SH STEAM STARTUP VENT CONTROL 22

11.0 HP CONTINUOUS BLOWDOWN (CBD) VALVE CONTROL..... 23

12.0 LP CONTINUOUS BLOWDOWN (CBD) VALVE CONTROL 24

13.0 BLOWDOWN TANK TEMPERATURE CONTROL..... 24

14.0 EXTERNAL DEAERATOR PRESSURE CONTROL 25

15.0 EXTERNAL DEAERATOR LEVEL CONTROL 25

16.0 HP INTERMITTENT BLOWDOWN (IBD) VALVE CONTROL 26

17.0 LP INTERMITTENT BLOWDOWN (IBD) VALVE CONTROL 27

18.0 CONTROL OF HP DRUM VENT VALVES 27

19.0 CONTROL OF LP DRUM VENT VALVES 28

20.0 EXTERNAL DEAERATOR VENT VALVE CONTROL 28

21.0 CONTROL OF HP ECONOMIZER MANIFOLD VENT VALVE 28

22.0 CONTROL OF LP ECONOMIZER MANIFOLD VENT VALVE 28

23.0 CONTROL OF HP SH OUTLET LINE AUTOMATIC DRAIN POT 29

24.0 CONTROL OF HP SH ATTEMPERATOR AUTOMATIC DRAIN POT 29

25.0 CONTROL OF HP MODULE MS302 AND MS303 CROSSOVER AUTOMATIC DRAIN POT 30

26.0 CONTROL OF LP SH OUTLET LINE AUTOMATIC DRAIN POT BEFORE STEAM STOP VALVE 30

27.0 CONTROL OF MOTOR OPERATED OPEN/CLOSE VALVES 31

28.0 SIGNAL MONITORING FOR PERFORMANCE INDICATION AND ALARMS (AS REQUIRED) 31

29.0 APPENDIX A - DENSITY COMPENSATED STEAM DRUM LEVEL EQUATIONS 34

1.0 HRSG INTERLOCKS, ALARMS & SIGNALS MONITORING PER NFPA 85

1.1 Per NFPA 85 requirements an HRSG safety interlock system "shall be installed to protect personnel from injury and to protect equipment from damage." NFPA 85 states that "interlock functions shall be initiated by one or more of the following - 1) switches independent of control functions and signals, 2) two analog signals with a divergence alarm, and 3) three analog signals employing an auctioneering system and a divergence alarm or other fault diagnostic alarm. To meet the requirements of NFPA 85 a Distributed Control System (DCS) (by others) is designed to manage all interlock and alarm signals related to the safe operation of the HRSG with respect to the Combustion Turbine (CT).

1.2 For example, drum level is measured by three level transmitters and drum pressure is measured by two pressure transmitters. The drum level and pressure transmitters send 4-20 mA measurement signals to the DCS for drum level control and indication. Measurement values are compared and validated based on a two of three auctioneering logic in the DCS. Average values of drum level and pressure are determined and used to calculate the density compensated drum level. The average pressure measurement is used to determine steam and water density data. The density or specific gravity values are used to compensate the average level measurement for density differences between the HP drum water and water in the level transmitter's 'cold' measurement leg, which is at ambient temperature. If the compensated drum level referenced to the drum NWL is at a LOW drum level condition, the DCS energizes audible and visual alarm indications. If the compensated drum level referenced to the drum NWL is at a LOW-LOW drum level condition, the DCS sends a digital signal to the CT control system to runback CT load. If the compensated drum level referenced to the drum normal water level (NWL) is at a HIGH-HIGH-HIGH drum level condition, the DCS trips the ST. If the compensated drum level referenced to the drum normal water level (NWL) is at a LOW-LOW-LOW drum level condition, the DCS also trips the CTG.

1.3 Normally three transmitter (or temperature element) measurements of the same parameter are compared in the DCS, but two transmitter (or temperature element) measurements can also be compared. If three transmitter (or temperature element) measurements are compared, a two of three auctioneering logic is used in the DCS. The average value is normally based on three measurements if all three measurements are valid. A measurement is valid if it is within the calibrated transmitter range and its value is within a specified tolerance of either of the other two measurements. Upon comparison of the transmitter (or temperature element) measurement values, if any of the values is not within the specified tolerance of both of the other two values or if any transmitter (or temperature element)

measurement is out of range, a 'measurement deviation / bad quality' alarm for that transmitter (or temperature element) is raised at the DCS. If none of the measurement comparisons are within the specified tolerance, the CT is tripped and/or a 'bad overall average measurement' alarm is also raised at the DCS. If only two transmitter (or temperature element) measurements of the same parameter are compared, the average value is used in the DCS. If the measurement comparison does not meet the specified tolerance, the deviation alarm is raised for the other transmitter (or temperature element) at the DCS.

1.4 The following HRSG parameters, which are determined in the DCS, are interlocks for starting the CT:

1. HP Drum Level (density compensated, average value of 2 of 3 auctioneering of HP drum level measurements from dP transmitters, HAD10CL001, HAD10CL002 & HAD10CL003, which send 4-20 mA signals to the DCS Controller) is within the defined startup range (i.e., ≥ -355.6 millimeter (-14 in., ref. NWL)).

2. HP Drum Pressure (average value of HP drum pressure measurements from pressure transmitters, HAD10CP001& HAD10CP002, which send 4-20 mA signals to the DCS Controller) is not HIGH (i.e., ≤ 82.737 barg (1200 psig)).

3. LP Drum Level (density compensated, average value of 2 of 3 auctioneering of LP drum level measurements from dP transmitters, HAD50CL001, HAD50CL002 & HAD50CL003, which send 4-20 mA signals to the DCS Controller) is within the defined startup range (i.e., ≥ -12.192 millimeter (-0.48 in., ref. NWL)).

4. LP Drum Pressure (average value of LP drum pressure measurements from pressure transmitters, HAD50CP001 & HAD50CP002, which send 4-20 mA signals to the DCS Controller) is not HIGH (i.e., ≤ 8.963 barg (130 psig)).

5. HRSG Duct Exhaust Gas Pressure (HRSG Duct Pressure based on either of two HRSG Duct pressure transmitter, HNB10CP001 thru HNB10CP004, which send 4-20 mA signals to the DCS Controller) is not HIGH (i.e., ≤ 584.2 millimeter. H_2O (23 in.H_2O)).

6. The HRSG feedwater supply system is available to respond to demand (proven by full open HP feedwater block valve actuator 'open' limit switch activation).

7. Position of HRSG Diverter Damper(State of HRSG diverter damper position based on HRSG Diverter Damper 'open' and 'closed' limit switches, which send digital input signals to the DCS control system) is correct (i.e., HRSG Diverter Stack Damper Position is OPEN to HRSG & CLOSED to DIVERTER DAMPER STACK).

8. Position of HRSG Blanking Plate (State of HRSG Blanking Plate position based on HRSG Blanking Plate 'open' and 'closed' limit switches which send digital input signals to the DCS control system) is correct (i.e., HRSG Blanking Plate Position is OPEN to HRSG)

The following HRSG interlock conditions initiate CT:

When the position of HRSG Diverter Damper Stack Damper is OPEN to HRSG and is CLOSED to DIVERTER DAMPER STACK and HRSG Blanking Plate Position is OPEN to HRSG, the following HRSG interlock conditions initiate CT :

1. HP Drum Level is LOW-LOW-LOW (i.e., ≤ -635 millimeter (- 25 in., ref. NWL)).

   REQUIRED RESPONSE: CT TRIP

2. HP Drum Level is LOW-LOW (i.e., ≤ -406.4 millimeter (- 16in., ref. NWL)).

   REQUIRED RESPONSE: RUNBACK CT

3. HP Drum Pressure is HIGH-HIGH-HIGH (i.e., ≥ 91.01barg (1320 psig)).

   REQUIRED RESPONSE: CT TRIP

4. HP Drum Pressure is HIGH-HIGH (i.e., ≥ 86.18 barg (1250 psig)).

   REQUIRED RESPONSE: RUNBACK CT

5. HP SH Outlet Pressure is HIGH-HIGH (i.e., ≥ 84.46 barg (1225 psig)).

   REQUIRED RESPONSE: RUNBACK CT

6. HP Steam Output Temperature is HIGH-HIGH-HIGH (i.e., ≥ 541.67 ℃ (1007 ℉)).

   REQUIRED RESPONSE: CT TRIP

7. HP Steam Output Temperature is HIGH-HIGH (i.e., ≥ 538.89 ℃ (1002 ℉)).

   REQUIRED RESPONSE: RUNBACK CT

8. LP Drum Level is LOW-LOW-LOW (i.e., ≤ -330.2 millimeter (- 13 in., ref. NWL)).

   REQUIRED RESPONSE: CT TRIP

9. LP Drum Level is LOW-LOW (i.e., ≤ -254 millimeter (- 10 in., ref. NWL)).

   REQUIRED RESPONSE: RUNBACK CT

10. LP Drum Pressure is HIGH-HIGH-HIGH (i.e., ≥ 13.44 barg (195 psig)).

    REQUIRED RESPONSE: CT TRIP

11. LP Drum Pressure is HIGH-HIGH (i.e., ≥ 10.34barg (150psig)).

REQUIRED RESPONSE: RUNBACK CT

12. LP SH Outlet Pressure is HIGH-HIGH (i.e., ≥ 10.34barg (150 psig)).

REQUIRED RESPONSE: RUNBACK CT

13. HP Drum Level Overall Measurement Fault

REQUIRED RESPONSE: CT TRIP

14. HP Output Steam Temperature Overall Measurement Fault

REQUIRED RESPONSE: RUNBACK CT

15. LP Drum Level Overall Measurement Fault

REQUIRED RESPONSE: CT TRIP

16. LP Drum Pressure Overall Measurement Fault

REQUIRED RESPONSE: CT TRIP

17. HRSG Duct Exhaust Gas Pressure is HIGH HIGH (i.e., ≥ 622.3 millimeter. H_2O (24.5 in.H_2O)).

REQUIRED RESPONSE: CT TRIP

If **<u>two gas turbines</u>** have been tripped, the following HRSG interlock conditions initiate ST trips:

1. HP Drum Level is HIGH-HIGH-HIGH (i.e., ≥ 177.8 millimeter (7 in., ref. NWL)).

REQUIRED RESPONSE: STEAM TURBINE TRIP

2. LP Drum Level is HIGH-HIGH-HIGH (i.e., ≥ 177.8 millimeter (7 in., ref. NWL)).

REQUIRED RESPONSE: STEAM TURBINE TRIP

The following HRSG operating conditions must be alarmed as required per NFPA 85:

1. HP Drum Level is LOW (i.e., ≤ -152.4 millimeter (- 6 in., ref. NWL)).

2. HP Drum Level is HIGH (i.e., ≥ 127 millimeter (5 in., ref. NWL)).

3. HP Drum Level is HIGH-HIGH (i.e., ≥ 152.4 millimeter (6 in., ref. NWL)).

4. HP Drum Pressure is HIGH (i.e., ≥ 82.737 barg (1200 psig)).

5. HP SH Outlet Steam Pressure is HIGH (i.e., ≥ 82.048 barg (1190 psig)).

6. LP SH Outlet Steam Pressure is HIGH (i.e., ≥ 8.274barg (120psig)).

7. HP Steam Output Temperature is HIGH (i.e., ≥ 533.33 ℃ (992 ℉)).

8. LP Drum Level is LOW (i.e., ≤ -152.4 millimeter (-6 in., ref. NWL)).

9. LP Drum Level is HIGH (i.e., ≥ 127 millimeter (5 in., ref. NWL)).

10. LP Drum Level is HIGH-HIGH (i.e., ≥ 152.4 millimeter (6 in., ref. NWL)).

11. LP Drum Pressure is HIGH (i.e., ≥ (i.e., ≥ 8.963 barg (130psig)).

12. HRSG Duct Exhaust Gas Pressure is HIGH (i.e., ≥ 584.2 millimeter. H_2O (23 in.H_2O)).
13. LP Steam Output Temperature is HIGH-HIGH-HIGH (i.e.,≥ 260.56 ℃ (501℉)).
14. LP Steam Output Temperature is HIGH-HIGH (i.e., ≥ 257.78 ℃ (496℉)).
15. LP Steam Output Temperature is HIGH (i.e., ≥ 252.22℃ (486℉)).
16. The Temp Difference Between HPSH1 Module and HPSH2 Module Outlet High (i.e., ≥ 66.7℃ (120℉)).

The following HRSG signals shall be continuously monitored and available for display at the Operator Interface Machine (by others) per NFPA 85:

1. HP Drum Level
2. HP Drum Pressure
3. LP Drum Level
4. LP Drum Pressure
5. HRSG Duct Exhaust Gas Pressure
6. HRSG Duct Outlet Gas Temperature (average temperature measurement and individual temperature measurements of four Duct Outlet Gas thermocouples, HNA11CT001 thru HNA11CT004 which send 4-20 mA signals to the DCS).

Additionally:

1. HRSG Stack Outlet Gas Temperature (average temperature measurement and individual temperature measurements of two HRSG Stack Outlet Gas thermocouples, HNE10CT001 & HNE10CT002, which send 4-20 mA signals to the DCS).

2.0 HP DRUM LEVEL CONTROL

2.1 HP drum level is controlled by two process control loops depending on the operation of the HRSG unit. A single element feedback loop controller is used to control drum level at setpoint during startup operation when the HP SH steam flow rate is less than or equal to 30% of the full load steam flow rate. A three element, feedforward/feedback drum level control loop is used during normal operation when the steam flow rate is greater than 30% of the full load flow rate. The HP Drum level is controlled by modulating HP Drum level control valves, LAB10AA201, which regulate the flow of HP feedwater into the HP Drum. HP drum level and HP main steam flow measurements in the HP drum level control loop are density compensated to account for the effect of fluid density on the measurements. Density or specific volume is determined as a function of the HP drum saturation steam pressure measurement and the HP superheated steam flow temperature and pressure measurements.

2.2 Three level transmitters, HAD10CL001, HAD10CL002 & HAD10CL003, measure HP drum level. Each HP drum level transmitter is calibrated using an elevated zero so that an increasing drum level measurement is directly proportional to an increasing 4-20 mA signal. The HP drum level transmitter measurements are compared in the DCS control system logic and a two of three auctioneering logic is used in the control system logic. A **4%** difference in drum level between any drum level transmitter measurements will cause a deviation alarm for the level transmitter that exceeds the tolerance. Upon comparison of the compensated drum level measurements, if none of the measurement comparisons are within the specified tolerance, the CT are tripped and an overall measurement fault alarm is raised. A single, average value of HP Drum level is used to determine the density compensated HP drum level in the DCS control system logic.

2.3 In the single element HP drum level control loop, a proportional-integral (PI) feedback controller compares the HP drum level to the setpoint. The drum level controller outputs a 0-100% value to the HP feedwater control valve, LAB10AA201, to maintain the HP drum level at its setpoint.

2.4 In the three element HP drum level control loop, a proportional-integral (PI) feedback controller compares the HP drum level to the setpoint. The HP drum level feedback controller output is summed with the HP feedwater flow feedforward signal that is the value of the HP SH main steam flow minus the HP attemperator spraywater flow. The result is the HP feedwater flow demand setpoint to the HP feedwater flow controller. The HP attemperator spraywater flow is density compensated by HP attemperator spraywater temperature measurement LAE10CT001. The HP feedwater flow controller is a proportional-integral (PI) feedback controller.The HP feedwater flow controller compares the feed water

flowrate to the setpoint and outputs a 0-100% value to the HP feedwater control valve, LAB10AA201 to maintain the HP feedwater flow at its setpoint.

2.5 HP drum level is density compensated by measuring first the HP drum saturation pressure. Two pressure transmitters, HAD10CP001& HAD10CP002, measure HP drum pressure. The HP drum pressure transmitter measurements are compared in the DCS control system logic. A **5%** difference in drum pressure between two drum pressure transmitter measurements will cause an overall measurement fault alarm and set the design pressure. The average HP drum level measurement must be compensated due to density differences between the HP drum water and water in the level transmitter cold measurement leg (See Appendix A. 'Density Compensated Steam Drum Level Equations'). An average value of HP drum pressure is used to determine the liquid water and water vapor densities from ASME Steam Table correlations.

2.6 HP main steam flow is measured by flow transmitter (By other). HP main steam flow is the feedforward signal to determine the HP feedwater flow demand setpoint in the three element HP drum level control loop. The HP main steam flow is density compensated by HP main steam pressure and temperature measurement. The HP main steam pressure is measured by pressure transmitter, HAH10CP002. The HP main steam temperature is measured by thermocouples, HAH10CT003 & HAH10CT004. If the HP main steam flow transmitter is failure in three element control mode, three element control mode is switched to single element control mode automatically.

2.7 The HP inter-stage attemperator spraywater flow is measured by flow transmitter, LAE10CF001. The HP inter-stage attemperator spraywater flow measurement is density compensated using downstream HP inter-stage attemperator spraywater temperature, LAE10CT001.

2.8 The HP feedwater flow is measured by flow transmitters, LAB31CF002 for HRSG1 and LAB32CF002 for HRSG2, which sends a 4-20 mA signal of the flow to the DCS. The HP feedwater flow measurement is the feedback control signal to the HP feedwater flow controller. The HP feedwater flow measurement is density compensated using the downstream HP feedwater temperature measurement, LAB10CT001, which sends a Type E thermocouple input signal to the DCS. If HP feedwater flow transmitter is failure in three element control mode, three element control mode is switched to single element control mode automatically.

2.9 During startup operation when steam production to the condenser through the HP bypass system is low and the steam flow measurement is not accurate, drum level is controlled by a single element feedback controller specifically tuned for startup conditions. Also, the drum swell will occur as steam is produced and the density of the drum water decreases. Upon startup the level in the drum should be lowered to the startup drum level using the HP intermittent blowdown (IBD) valve, HAD10AA102. As the drum level continues to rise during startup, the drum level controller setpoint is calculated by HP drum pressure. When the drum level equals Normal Water Level (NWL), the drum level setpoint is set equal to NWL and held constant. As the drum level continues to increase, the HP IBD valve, HAD10AA102 is opened when the level reaches High Level and is closed when the drum level is slightly above NWL. If the CT trips, after the drum level setpoint has been set equal to NWL, the sequence is reset if the actual drum level decreases below NWL upon cooling and before the CT is restarted. The single element feedback drum level controller automatically starts to control drum level at NWL, when the drum level decreases below NWL. At the end of the startup period, steam flow through the bypass system or to the steam turbine increases. When the normal, minimum load steam flow rate or the maximum startup feedwater flow rate is measured, the HP IBD valves are closed and drum level control is switched to three element control.

2.10 During normal operation, the HRSG is operated under variable pressure conditions over the load range, i.e., sliding pressure operating conditions. HRSG load changes equate to changes in the HP, and LP evaporators' heat inputs and their corresponding steam productions. Change in the CT load demands directly influence normal load steam productions and boiler drum pressures. Transient HRSG upset operating conditions other than MW load changes could also directly influence the HP, and LP steam productions and boiler drum pressures. Upon any MW load change or boiler upset condition, the magnitude of the drum level setpoint deviations and the impact on the individual drum level control loops depend on how rapidly the respective steam productions and boiler drum pressures are varied.

2.11 For example, when the megawatt load demand is decreased, the CT firing rate is decreased and the HP steam production decreases. As less steam is produced, less steam bubbles in the boiler drum and evaporator loop are created, the specific volume of the steam-water mixture decreases, and, consequently, the boiler drum level decreases or shrinks. As another example, when a process upset condition other than a load change causes the steam pressure to increase, the steam production decreases due to higher energy requirements at the corresponding higher steam saturation temperature. As the drum pressure increases, the steam bubbles in the boiler drum and evaporator loop contract, the specific volume of the steam-water mixture decreases, and consequently, the drum

level shrinks. When a load change or a process upset condition occur that results in less steam production, the three element drum level feed forward controls respond by decreasing the feedwater flow in order to equal steam flow and maintain drum level. However, depending on how quickly the load change or process upset condition occur, the effects on drum level of less steam production or an increasing drum pressure may cause the drum level feedback controller to overcorrect or offset the feedforward control. This can lead to sluggish or to unstable control of drum level.

2.12 Conversely, when the megawatt load demand is increased, the CT firing rate is increased and the HP steam production increases. As more steam is produced, more steam bubbles in the boiler drum and evaporator loop are created, the specific volume of the steam-water mixture increases, and, consequently, the drum level rises or swells. As another example, when a process upset condition other than a load change causes the steam pressure to decrease, the steam production increases due to lower energy requirements at the corresponding lower steam saturation temperature. As the drum pressure decreases, the steam bubbles in the boiler drum and evaporator loop expand, the specific volume of the steam-water mixture increases, and, consequently, the drum level swells. When a load change or a process upset condition occur that results in more steam production, the three element drum level feedforward controls respond by increasing the feedwater flow in order to equal steam flow and maintain drum level. Again, however, depending on how quickly the load change or process upset condition occur, the effects on drum level of more steam production or a decreasing drum pressure may also cause the drum level feedback controller to overcorrect or offset the feedforward control and lead to sluggish or unstable drum level control.

2.13 The conditions for shrink or swell can be monitored and corresponding adjustments to one or all of the control parameters can be made, when a shrink or swell condition occur. Shrink occurs when steam flow is decreasing and drum level is decreasing or when steam flow is decreasing and drum pressure is increasing. Swell occurs when steam flow is increasing and drum level is increasing or when steam flow is increasing and drum pressure is decreasing. The integral (I) constant of the boiler drum level PI feedback controller is set equal to zero when a shrink or swell condition occurs. Accordingly, the drum level feedback control action will not seriously overcorrect or offset the feedforward control action to match the feedwater and steam flows and maintain drum level. The integral constant is reset to its original value when the steam flow is nearly constant. The controllability of the drum level control loop is therefore improved.

2.14 During shutdown operation, the CT turbine load is shed in a controlled manner. The three element level controller can be employed throughout the shutdown period. As drum pressure is reduced, normal

drum level control can be used including the operation of the HP IBD valve to prevent a high level trip of the unit.

3.0 LP DRUM LEVEL CONTROL

3.1 LP drum level is controlled by two process control loops depending on the operation of the HRSG unit. A single element feedback loop controller is used to control drum level at setpoint during startup operation when the LP SH steam flow rate is less than or equal to 30% of the full load steam flow rate. A three element, feedforward/feedback drum level control loop is used during normal operation when the steam flow rate is greater than 30% of the full load flow rate. The LP Drum level is controlled by modulating LP Drum level control valve, HAC50AA201, which regulates the flow of LP feedwater into the LP Drum. The LP drum level and LP main steam flow measurements in the LP drum level control loop are density compensated to account for the effect of fluid density on the measurements. Density or specific volume is determined as a function of the LP drum saturation steam pressure measurement and the LP superheated steam flow temperature and pressure measurements.

3.2 In the single element LP drum level control loop, a proportional-integral (PI) feedback controller compares the LP drum level to the setpoint. The drum level controller outputs a 0-100% value to the LP feedwater control valve, HAC50AA201, to maintain the LP drum level at its setpoint.

3.3 Three level transmitters, HAD50CL001, HAD50CL002 & HAD50CL003, measure LP drum level. Each LP drum level transmitter is calibrated using an elevated zero so that an increasing drum level measurement is directly proportional to an increasing 4-20 mA signal. The LP drum level transmitter measurements are compared in the DCS control system logic and a two of three auctioneering logic is used in the control system logic. A **4%** difference in drum level between any drum level transmitter measurements will cause a deviation alarm for the level transmitter that exceeds the tolerance. Upon comparison of the raw level measurements, if none of the measurement comparisons are within the specified tolerance, the CT are tripped and an overall measurement fault alarm is raised. A single, average value of LP Drum level is used to determine the density compensated LP drum level in the DCS control system logic.

3.4 In the three element LP drum level control loop, a proportional-integral (PI) feedback controller compares the LP drum level to the setpoint. The LP drum level feedback controller output is summed with the feedforward signal which is the value of the LP main steam flow measurement plus storage tank inlet flow measurement LAA10CF001 that is density compensated by the temperature measurement HAC50CT001. The result is the LP feedwater flow demand setpoint to the LP feedwater

flow controller. The LP feedwater flow controller is a proportional-integral (PI) feedback controller. The LP feedwater flow controller compares the LP feed water flowrate to the setpoint and outputs a 0-100% value to the LP feedwater control valve, HAC50AA201, to maintain the LP feedwater flow at its setpoint.

3.5 LP drum level is density compensated by measuring first the LP drum saturation pressure. Two pressure transmitters, HAD50CP001 & HAD50CP002, measure LP drum pressure. The LP drum pressure transmitter measurements are compared in the DCS control system logic. A **5%** difference in drum pressure between two drum pressure transmitter measurements will cause an overall measurement fault alarm and the CT is tripped. The average LP drum level measurement must be compensated due to density differences between the LP drum water and water in the level transmitter cold measurement leg (See Appendix A. 'Density Compensated Steam Drum Level Equations'). An average value of LP drum pressure is used to determine the liquid water and water vapor densities from ASME Steam Table correlations.

3.6 LP main steam flow is measured by flow transmitter (By other). It is used as a feedforward signal to determine the LP feedwater flow demand setpoint in the three element LP drum level control loop. LP main steam flow is density compensated by LP main steam pressure measurement and temperature measurement. The LP main steam pressure is measured by a pressure transmitter, HAH50CP001. The LP main steam temperature is measured by a thermocouple, HAH50CT001. If the LP main steam flow transmitter is failure in three element control mode, the operator should switch LP feedwater control system from automatic mode to manual mode.

3.7 The LP feedwater flow is measured by flow transmitter LAB50CF001. The LP feedwater flow measurement is the feedback control signal to the LP feedwater flow controller. The LP feedwater flow measurement is density compensated by the downstream LP feedwater temperature measurement LAB50CT001. If the LP feedwater flow transmitter is failure in three element control mode, the operator should switch LP feedwater control system from automatic mode to manual mode.

3.8 During startup operation, when steam production to the condenser through the LP bypass system is low and the steam flow measurement is not accurate, drum level is controlled by a single element feedback controller specifically tuned for startup conditions. Also, drum swell will occur as steam is produced and the density of the drum water decreases. Upon startup the level in the drum should be lowered to the startup drum level using the LP intermittent blowdown (IBD) valve, HAD50AA102. As the drum level continues to rise during startup, the drum level controller setpoint is set equal to the actual drum level.

When the drum level equals Normal Water Level (NWL), the drum level setpoint is set equal to NWL and held constant. As the drum level continues to increase, the IBD valve, HAD50AA102 is opened when the level reaches High High Level and is closed when the drum level is slightly above NWL. If the CT trips, after the drum level setpoint has been set equal to NWL, the sequence is reset if the actual drum level decreases below NWL upon cooling and before the CT is restarted. The single element feedback drum level controller automatically starts to control drum level at NWL when the drum level decreases below NWL. At the end of the startup period steam flow through the bypass system or to the steam turbine increases. When the normal, minimum load steam flow rate or the maximum startup feedwater flow rate is measured, the LP IBD valves are closed and drum level control is switched to three element control.

3.9 During normal operation the HRSG is operated under variable pressure conditions over the load range, i.e., sliding pressure operating conditions. HRSG load changes equate to changes in the HP and LP evaporators' heat inputs and their corresponding steam productions. Change in the CT load demands directly influence normal load steam productions and boiler drum pressures. Transient HRSG upset operating conditions other than MW load changes could also directly influence the HP and LP steam productions and boiler drum pressures. Upon any MW load change or boiler upset condition, the magnitude of the drum level setpoint deviations and the impact on the individual drum level control loops depend on how rapidly the respective steam productions and boiler drum pressures are varied.

3.10 For example, when the megawatt load demand is increased, the CT firing rate is increased and typically the LP steam production decreases. As less steam is produced, less steam bubbles in the boiler drum and evaporator loop are created, the specific volume of the steam-water mixture decreases, and consequently, the boiler drum level decreases or shrinks. As another example, when a process upset condition other than a load change causes the steam pressure to increase, the steam production decreases due to higher energy requirements at the corresponding higher steam saturation temperature. As the drum pressure increases, the steam bubbles in the boiler drum and evaporator loop contract, the specific volume of the steam-water mixture decreases, and, consequently, the drum level shrinks. When a load change or a process upset condition occur that results in less steam production, the three element drum level feed forward controls respond by decreasing the feedwater flow in order to equal steam flow and maintain drum level. However, depending on how quickly the load change or process upset condition occur, the effects on drum level of less steam production or an increasing drum pressure may cause the drum level feedback controller to overcorrect or offset the feedforward control. This can lead to sluggish or to unstable control of drum level.

3.11 Conversely, when the megawatt load demand is decreased, the CT firing rate is decreased and the LP steam production increases. As more steam is produced, more steam bubbles in the boiler drum and evaporator loop are created, the specific volume of the steam-water mixture increases, and, consequently, the drum level rises or swells. As another example, when a process upset condition other than a load change causes the steam pressure to decrease, the steam production increases due to lower energy requirements at the corresponding lower steam saturation temperature. As the drum pressure decreases, the steam bubbles in the boiler drum and evaporator loop expand, the specific volume of the steam-water mixture increases, and, consequently, the drum level swells. When a load change or a process upset condition occur that results in more steam production, the three element drum level feedforward controls respond by increasing the feedwater flow in order to equal steam flow and maintain drum level. Again, however, depending on how quickly the load change or process upset condition occur, the effects on drum level of more steam production or a decreasing drum pressure may also cause the drum level feedback controller to overcorrect or offset the feedforward control and lead to sluggish or unstable drum level control.

3.12 The conditions for shrink or swell can be monitored and corresponding adjustments to one or all of the control parameters can be made, when a shrink or swell condition occur. Shrink occurs when steam flow is decreasing and drum level is decreasing or when steam flow is decreasing and drum pressure is increasing. Swell occurs when steam flow is increasing and drum level is increasing or when steam flow is increasing and drum pressure is decreasing. The integral (I) constant of the boiler drum level PI feedback controller is set equal to zero when a shrink or swell condition occurs. Accordingly, the drum level feedback control action will not seriously overcorrect or offset the feedforward control action to match the feedwater and steam flows and maintain drum level. The integral constant is reset to its original value when the steam flow is nearly constant. The controllability of the drum level control loop is therefore improved.

3.13 During shutdown operation, the CT turbine load is shed in a controlled manner. The three element level controller can be employed throughout the shutdown period. As drum pressure is reduced, normal drum level control can be used including the operation of the IBD valves to prevent a high level trip of the unit.

4.0 HP DRUM LEVEL REMOTE LEVEL INDICATION PER ASME BOILER CODE

Per the ASME Boiler Code, in addition to the average HP drum level measurement determined in DCS Controller, at least one other independent, remote means of level indication must be provided. The HP

drum Remote level indicator, HAD10CL003, is wired to the HP Drum Remote Level Indicator, HAD10CL502 & HAD10CL503 that are located at grade and at control room. One level gauge, HAD10CL501, is supplied at each end of the HP drum. The level gauges are installed in a water column connected to the HP drum.

5.0 LP DRUM LEVEL REMOTE LEVEL INDICATION PER ASME BOILER CODE

Per the ASME Boiler Code, in addition to the average LP drum level measurement determined in DCS Controller, at least one other independent, remote means of level indication must be provided. The LP drum Remote level indicator, HAD50CL003, is wired to the LP Drum Remote Level Indicator, HAD50CL502 & HAD50CL503 that are located at grade and at control room. One level gauge, HAD50CL501, is supplied at each end of the LP drum. The level gauges are installed in a water column connected to the LP drum.

6.0 HP SUPERHEATER MAIN STEAM TEMPERATURE CONTROL

6.1 An inter-stage attemperator is used to control the HP main steam outlet temperature from the HRSG. The HP superheater inter-stage attemperator control will modulate water spray flow as required to control the HP steam terminal point temperature 528℃ (982℉) . During startup and loading, while at minimum IGV angle position, the solenoid operated spray water block valve, LAE10AA101, is set auto status. The spray water block valve is opened when the spray water control valve's open demand signal is greater than 5% and the HP SH steam outlet temperature difference value between the HP SH steam outlet temperature measurement value and the HP SH steam outlet temperature setpoint value is less than 13 ℃ . As the CT load and exhaust gas temperature are increased, the HP superheater outlet temperature rises to its control temperature. Further load increases causes the spray water temperature controller demand to increase and the spray water control valve is modulated to control superheater outlet temperature. On falling spray water demand, the spray water control valve is modulated to control superheater outlet temperature. If the spray water control valve temperature controller open demand signal is less than 4%, the spray water control valve is closed. When the spray water control valve is closed, the spray water block valve is closed after a 10 sec time delay.

6.2 The HP main steam outlet temperature is controlled by two cascaded temperature control loops. The HP main steam outlet temperature is the controlled variable of the primary loop controller with its temperature setpoint determined by design. HP main steam temperature is measured by two thermocouples, HAH10CT003 & HAH10CT004. Two measurements are compared. A ten 5.55 ºC (10

°F) temperature difference between two main steam temperature measurements will cause a deviation alarm for the thermocouple that exceeds the tolerance. The average HP main steam temperature is then used as the process variable in the primary HP main steam temperature control loop.

6.3 If the average HP main steam temperature is greater than the setpoint temperature by 5.55 °C (10 °F) for 15 seconds, a HP main steam temperature high alarm signal is raised. If the average HP main steam temperature reaches a value greater than the setpoint temperature by 11.11 °C (20 °F) for 10 seconds the operator will decide if the CT need run back to a lower load. If the average HP main steam temperature reaches a value greater than the setpoint temperature by 13.89 °C (25 °F) for 5 seconds, the HRSG is then also tripped.

6.4 The output from the primary controller is the setpoint for the secondary controller. The slave controller compares the setpoint from the primary controller output to the HP inter-stage attemperator outlet steam temperature measured by one thermocouple, HAH10CT002. The secondary controller outputs a 0-100% value to the HP inter-stage attemperator spraywater control valve LAE10AA201. The HP inter-stage attemperator spraywater control valve is modulated to control the flow of spraywater to the HP inter-stage attemperator. The HP inter-stage spraywater flow is controlled to vary the HP inter-stage attemperator outlet steam temperature in order to maintain the HP main steam outlet temperature at its setpoint. Cascading the control loops in this manner minimizes the effects of process disturbances that would upset the inter-stage spraywater attemperation thus preventing these disturbances from influencing the HP main steam outlet temperature.

6.5 The HP inter-stage attemperator outlet steam temperature setpoint is low limited to a minimum of 27.78 °C (50 °F) above the steam saturation temperature (Tsat) in order to prevent steam condensation in the steam attemperator piping. If the primary controller output, which is the secondary controller setpoint, is less than Tsat plus 27.78 °C (50 °F), the secondary controller setpoint is set equal to Tsat plus 27.78 °C (50 °F). The secondary controller will then control the HP inter-stage attemperator outlet steam temperature to Tsat plus 27.78 °C (50 °F) to prevent steam condensation in the attemperator piping. The HP inter-stage attemperator header pressure is measured by the HP inter-stage attemperator inlet pressure transmitter, HAH10CP001. The HP inter-stage attemperator outlet saturation temperature is then determined as a function of the HP inter-stage attemperator outlet pressure. The sum of the HP inter-stage attemperator inlet saturation temperature and 27.78 °C (50 °F) is then used in a low limiting function block to determine the low limit of the setpoint of the secondary controller.

7.0 HP SH STEAM STARTUP VENT CONTROL

7.1 The HP SH steam startup vent control valve (SUV), HAH10AA201, is used during HRSG cold, warm or hot startup operation to control the rate of temperature increase or temperature ramp rate in the HP drum based on the HP drum saturation pressure measurement. During any startup period the HP drum temperature ramp rate must be controlled to 11.11 °C (20 °F) per minute by venting steam through the HP SH SUV valve or by modulating the HP SH Steam Bypass valve. All startup periods are defined from zero CTG load until the desired HP SH steam outlet pressure is reached. For any startup operation the HP SH SUV valve is in the closed position when the CTG is started.

7.2 When the HRSG operating permissives are met and CT is ignited, low position limiter is set to 10% open to ensure steam flow through SH tube to avoid excess heat up at SH tube with no flow. When the HP drum pressure equals 1.034barg (15 psig), the HP SH steam SUV is placed in automatic. The HP SH steam SUV valve is then automatically modulated to control the HP drum temperature ramp rate.

7.3 Specifically, two pressure transmitters, HAD10CP001 & HAD10CP002, measure HP drum pressure. Each HP drum pressure transmitter sends a 4-20 mA signal to the DCS, which are then compared to one another. A 5% difference in drum pressure measurement between two the drum pressure transmitters will cause an overall measurement fault alarm and the CT is tripped. The average HP drum pressure is then used by the DCS for control purposes.

7.4 The HP Drum temperature ramp rate is calculated using the average HP Drum steam saturation pressure. The HP Drum temperature ramp rate is determined by multiplying the change of the HP Drum saturation pressure with respect to time by the 1st derivative of the equation of HP Drum steam saturation temperature as a function of the HP Drum steam saturation pressure. The HP Drum temperature ramp rate is the process variable for the 'HP Drum Temperature Ramp Rate' controller.

7.5 The HP drum temperature ramp rate proportional-integral (PI) controller compares the HP drum temperature ramp rate to the setpoint of 20˚F/min. The HP drum temperature ramp rate controller then outputs a 0-100% signal to the HP SH steam SUV valve to position the valve and control the HP drum temperature ramp rate at its setpoint.

7.6 When the HP SH steam outlet pressure measured by pressure transmitter, HAH10CP002, has reached setpoint pressure 12.8 bara, the automatic control of the HP drum temperature rate controller is switched to the HP SH steam outlet pressure controller. The HP SH steam outlet pressure controller is a proportional-integral (PI) controller and compares the HP SH steam outlet pressure to the HP SH steam

outlet pressure setpoint 12.8 bara. The HP SH steam outlet pressure controller then outputs a 0-100% signal to the HP SH steam SUV valve to position the valve accordingly. When the HP SH steam outlet pressure has reached setpoint pressure 12.8 bara and the HP steam turbine bypass control valve is available and the plant condenser is on line, The HP SH steam outlet pressure controller is switched to the HP steam turbine bypass temperature ramp rate controller that continues to control HP drum temperature ramp rate to setpoint (20 ˚F/min). Then the HP SH steam SUV valve is stepped down automatically to its fully closed position as the control rate of HP drum temperature increase is controlled by the HP steam turbine bypass temperature ramp rate controller.

8.0 CONTROL OF HP BYPASS FOR HP DRUM TEMPERATURE RAMP RATE

8.1 The HP SH steam startup bypass control valve is used during HRSG cold, warm, or hot startup operation to control the rate of temperature increase or temperature ramp rate and HP drum pressure. During cold, warm and hot startup period(s), the HP drum temperature ramp rate must be limited to 20˚F/min, by bypass control valve. For cold, warm and hot start up periods are defined from zero CTG load until the desired HP drum pressure 80.724barg (1170.8 psig) is reached.

8.2 When the HP SH steam outlet pressure is greater than 12.8 bara and the HP steam turbine bypass control valve is available and the plant condenser is on line, the HP drum temperature ramp rate controller is switched to the HP steam turbine bypass temperature ramp rate controller. The HP Drum temperature ramp rate proportional-integral (PI) controller compares the HP drum temperature ramp rate to the setpoint. The HP drum temperature ramp rate controller then outputs a 0-100% signal to the HP SH steam turbine bypass control valve until the HP steam outlet pressure reaches the HP steam turbine rotation pressure (38 barg).

8.3 When the HP steam outlet pressure reaches the HP steam turbine rotation pressure(38 barg), the HP drum temperature ramp rate controller is transferred to the HP steam outlet pressure controller. The HP steam outlet pressure proportional-integral (PI) controller compares the HP steam outlet pressure to the HP steam turbine rotation pressure setpoint and gives out a 0-100% control signal to the HP steam turbine bypass control valve until the steam turbine speed reaches ~3000 rpm.

8.4 After the steam turbine rotation reaches ~3000 rpm and until the steam turbine generator mode reaches IPC mode, the HP steam turbine bypass control valve is controlled by 2 controllers: the HP steam out pressure ramp rate controller and the HP drum temperature ramp rate controller. The HP steam out pressure ramp rate controller is a proportional-integral (PI) controller that compares the HP steam out

pressure ramp rate to the setpoint. The signals from these two controllers are compared in a compare function block and the greater of the 2 signals is given out as a 0-100% signal to the HP steam turbine bypass control valve. When ST HP control valve start inlet pressure control, the HP bypass control valve is closed and set point is set to actual pressure plus 3 barg. One the ST HP control valve is fully opened, sliding pressure control will be applied.

8.5 Specifically, two pressure transmitters, HAD10CP001 & HAD10CP002, measure HP drum pressure. Each HP drum pressure transmitter sends a 4-20 mA signal to the DCS, which are then compared to one another. A 5% difference in drum pressure measurement between two the drum pressure transmitters will cause an overall measurement fault alarm and the HP Drum temperature ramp rate proportional-integral (PI) controller and the HP SH steam outlet pressure proportional-integral (PI) controller are switched from auto mode to manual mode. The average HP drum pressure is then used by the DCS for control purposes.

8.6 The HP Drum temperature ramp rate is calculated using the average HP Drum steam saturation pressure. The HP Drum temperature ramp rate is determined by multiplying the change of the HP Drum saturation pressure with respect to time by the 1st derivative of the equation of HP Drum steam saturation temperature as a function of the HP Drum steam saturation pressure. The HP Drum temperature ramp rate is the process variable for the 'HP Drum Temperature Ramp Rate' controller.

9.0 DIVERT DAMPER CONTROL

9.1 The HRSG Divert Damper located in the HRSG inlet duct. The Divert Damper allows CT exhaust gas into the HRSG in fixed increments while the HP SH SUV valve is modulated to raise pressure. Both controlled operations are designed to limit thermal stresses in the HRSG.

9.2 The Divert Damper blade is positioned automatically based on timed sequence of operation to coincide approximately with the rate of heat absorption required to raise HP Drum pressure to be defined pressure levels over a given time period. The diverter damper blade is motor driven and a position transmitter is used to proportion flow between the HRSG and the divert stack.

9.3 When gas turbine is on and HRSG is started, the Diverter Damper needs to be opened gradually by timer control. The Diverter Damper position intermediate positions are 30%, 50%, 60%, 70%, 80% and 100% and time period are 10 min, 10 min, 10 min, 10 min, 10 min, 5 min.

10.0 LP SH STEAM START UP VENT CONTROL

10.1 When the HRSG operating permissives are met and the unit is starting to heat up, the LP SH steam startup vent (SUV) valve, HAH50AA201, is opened manually to its minimum position to vent noncondensibles to atmosphere. When the LP drum pressure is reached 1.034barg (15 psig), the LP SH steam outlet pressure controller and the LP SH steam outlet pressure ramp rate controller are placed in automatic.

10.2 The LP SH steam outlet pressure ramp rate controller is a proportional-integral (PI) controller, which compares the LP SH steam outlet pressure ramp rate to the normal LP SH steam outlet pressure ramp rate setpoint 1.37895 barg (20 psig) per minute. The LP SH steam outlet pressure controller is a proportional-integral (PI) controller, which compares the LP SH steam outlet pressure, measured by pressure transmitter HAH50CP001, to the normal LP SH steam outlet pressure setpoint. When the LP SH steam outlet pressure is lesser than 2.03395 barg (29.5 psig), the LP SH steam outlet pressure ramp rate controller is used to control the LP SH steam outlet pressure ramp rate at its setpoint and outputs a 0-100% signal to the LP SH steam SUV valve, HAH50AA201 until the LP SH steam outlet pressure is reached 2.03395 barg (29.5 psig). Then, the LP SH steam outlet pressure ramp rate controller is switched to the LP SH steam outlet pressure controller. The LP SH steam outlet pressure controller compares the LP SH steam outlet pressure to the normal LP SH steam outlet pressure setpoint 2.0684 barg (30 psig) and outputs a 0-100% signal to the LP SH steam SUV valve, HAH50AA201, to maintain the steam outlet pressure at its setpoint.

10.3 The LP SH steam SUV valve continues to maintain the LP SH steam outlet pressure at the normal operating pressure 2.0684 barg (30 psig) until the LP SH steam bypass control valve is available and the plant condenser is on line. The LP steam SUV valves tied to the LP SH steam outlet pressure controller and the LP SH steam outlet pressure ramp rate controller are placed in manual. Then the LP SH steam SUV valve is stepped down manually to its fully closed position.

11.0 HP CONTINUOUS BLOWDOWN (CBD) VALVE CONTROL

The HP Drum continuous blowdown (CBD) valve, HAD10AA201, is a pneumatically actuated valve with a 4-20mA position transmitter and with open & closed limit switches. The HP CBD valve is automatically controlled by the DCS or manually controlled by the Operator through the Operator Interface Machine. The HP CBD control valve, HAD10AA201, regulates the continuous blowdown flowrate to the blowdown tank in order to maintain the HP Drum suspended solids' concentration below a given level. Typically

the concentration of suspended solids in the drum water is measured by the electrical conductivity of the drum water. According to EPRI guidelines for boiler drum water quality under normal operating limits at the HP drum operating pressures, the recommended direct conductivity is less than (TBD) µS/cm. The electrical conductivity of the boiler drum water is measured to determine its suspended solids' concentration level. In automatic operation, the boiler water conductivity measurement (by others) is compared to its setpoint and a 0-100% value from the DCS is sent to the CBD valve's positioner. The CBD valves are modulated to regulate the continuous blowdown flow rate from the HP Drum and control the boiler drum water conductivity at its setpoint.

12.0 LP CONTINUOUS BLOWDOWN (CBD) VALVE CONTROL

The LP Drum continuous blowdown (CBD) valve, HAD50AA201, is a pneumatically actuated valve with a 4-20mA position transmitter and with open & closed limit switches. The LP CBD valve is automatically controlled by the DCS or manually controlled by the Operator through the Operator Interface Machine. The LP CBD control valve, HAD50AA201, regulates the continuous blowdown flowrate to the blowdown tank in order to maintain the LP Drum suspended solids' concentration below a given level. Typically the concentration of suspended solids in the drum water is measured by the electrical conductivity of the drum water. According to EPRI guidelines for boiler drum water quality under normal operating limits at the LP drum operating pressures, the recommended direct conductivity is less than (TBD) µS/cm. The electrical conductivity of the boiler drum water is measured to determine its suspended solids' concentration level. In automatic operation, the boiler water conductivity measurement (by others) is compared to its setpoint and a 0-100% value from the DCS is sent to the CBD valve's positioner. The CBD valves are modulated to regulate the continuous blowdown flow rate from the LP Drum and control the boiler drum water conductivity at its setpoint.

13.0 BLOWDOWN TANK TEMPERATURE CONTROL

The blowdown tank temperature proportional-integral (PI) feedback controller compares the blowdown tank temperature measured by a thermocouple LCQ10CT001 to the blowdown tank temperature setpoint 60 ℃ (140 ℉) and outputs a 0-100% value to the cooling water control valve LCQ10AA201.

14.0 EXTERNAL DEAERATOR PRESSURE CONTROL

14.1 The external deaerator pressure is measured by a pressure transmitter, LAA11CP001. The external deaerator pressure needs to be controlled by control valves, LAA10AA202, LAA10AA201 (Boiler #1) & LAA10AA201 (Boiler #2).

14.2 The external deaerator pressure controller is a proportional-integral (PI) controller that compares the external deaerator pressure to the setpoint 1.199688 bara (17.4psia) and outputs a 0-100% signal to the control valves LAA10AA202, LAA10AA201 (Boiler #1) & LAA10AA201 (Boiler #2).

14.3 When the LP economizer to external deaerator feedwater temperature measured by one thermocouple, HAC50CT001, is greater than the corresponding steam saturation temperature 104.78 ℃ (220.6℉) of the deaerator pressure 1.199688 bara (17.4 psia), the pressure control valves LAA10AA201 (Boiler #1) & LAA10AA201 (Boiler #2) from the LP economizer to external deaerator are permitted to open. When the Lp steam temperature measured by thermocouples, (By Others), is greater than the corresponding steam saturation temperature 104.78 ℃ (220.6 ℉) of the deaerator pressure 1.199688 bara (17.4 psia) and the Lp steam pressure (absolute pressure) measured by a pressure transmitter (By Others), is greater than the deaerator pressure 1.199688 bara (17.4 psia), the pressure control valve LAA10AA202, from Lp steam to external deaerator are permitted to open. During start up, if the feedwater temperature from LP economizer to external deaerator or the steam temperature and pressure from LP steam are not met required temperature and pressure, the external deaerator pressure proportional-integral (PI) controller compares the external deaerator pressure to the setpoint pressure 1.199688 bara (17.4 psia) and outputs a 0-100% signal to the control valve (By Other) that controls the auxiliary steam to deaerator until LP ECON or steam from LP temperature and pressure are met.

15.0 EXTERNAL DEAERATOR LEVEL CONTROL

15.1 Three level transmitters, LAA10CL001 & LAA10CL002 measure the external deaerator level. The external deaerator level transmitters are calibrated using an elevated zero so that an increasing drum level measurement is directly proportional to an increasing 4-20 mA signal. The external deaerator level is density compensated by measuring first the external deaerator saturation pressure. One pressure transmitter, LAA11CP001, is used to measure the external deaerator pressure. The external deaerator level transmitter measurements are compared in the DCS control system logic and a average calculation logic is used in the control system logic. A 2% difference in external deaerator level measurements will cause a deviation alarm for the level transmitter that exceeds the tolerance.

15.2 The external deaerator level is controlled by a proportional-integral (PI) feedback controller that compares the external deaerator level to the setpoint. The external deaerator level controller outputs a

0-100% value to the condensate to external deaerator feedwater control valve, LAA11AA201, to maintain the external deaerator level at its setpoint.

16.0 HP INTERMITTENT BLOWDOWN (IBD) VALVE CONTROL

16.1 During startup operation drum swell will occur as steam is produced and the density of the drum water decreases. The HP intermittent blowdown (IBD) valve, HAD10AA102, is used for throttling service during startup to control drum swell when automatic feedback level control is ineffective. The HP intermittent blowdown (IBD) valves are set auto mode during the startup sequence based on defined drum levels. The HP intermittent blowdown (IBD) valve, HAD10AA102, is opened prior to HRSG operation. Upon startup the level in the drum should be lowered to the startup drum level by using the HP intermittent blowdown (IBD) valve, HAD10AA102. When the startup level is reached the HP IBD valves is closed and placed in automatic operating mode. As the drum level continues to rise during startup due to drum swell, the HP IBD valves are opened when the level reaches High Level and closes when the drum level is decreased to +1 inch (25.4mm) above Normal Water Level (NWL).

16.2 During normal operation, load changes and transient upset conditions can cause the drum level to swell or shrink. Normal drum level control is used when these operating conditions occur to control drum level. The HP IBD valves are also used when these operating conditions occur, as required, to prevent a high or low drum level trip condition.

16.3 During shutdown operation the CT turbine load is shed in a controlled manner. As the drum pressure is reduced, normal drum level control is used including the operation of the HP IBD valves to prevent a high level trip of the unit.

16.4 The HP IBD valves are motor operated globe valves with open & closed limit switches. These IBD valves are automatically controlled by the DCS or manually controlled by the Operator through the Operator Interface Machine. The IBD valves are driven open or closed by OPEN or CLOSE digital output commands from the DCS to the valves.

17.0 LP INTERMITTENT BLOWDOWN (IBD) VALVE CONTROL

17.1 During startup operation drum swell will occur as steam is produced and the density of the drum water decreases. The LP intermittent blowdown (IBD) valve, HAD50AA102, is used for throttling service during startup to control drum swell when automatic feedback level control is ineffective. The LP IBD valves are set auto mode during the startup sequence based on defined drum levels. The LP

intermittent blowdown (IBD) valve, HAD50AA102, is opened prior to HRSG operation. Upon startup the level in the drum should be lowered to the startup drum level by using the LP intermittent blowdown (IBD) valve, HAD50AA102. When the startup level is reached the LP IBD valves are closed and placed in automatic operating mode. As the drum level continues to rise during startup due to drum swell, the LP IBD valves are opened when the level reaches High Level and closes when the drum level is decreased to +1 inch (25.4mm) above Normal Water Level (NWL).

17.2 During normal operation, load changes and transient upset conditions can cause the drum level to swell or shrink. Normal drum level control is used when these operating conditions occur to control drum level. The LP IBD valves are also used when these operating conditions occur, as required, to prevent a high or low drum level trip condition.

17.3 During shutdown operation the CT turbine load is shed in a controlled manner. As drum pressure is reduced, normal drum level control is used including the operation of the LP IBD valves to prevent a high level trip of the unit.

17.4 The LP IBD valves are motor operated globe valves with open & closed limit switches. These IBD valves are automatically controlled by the DCS or manually controlled by the Operator through the Operator Interface Machine. The IBD valves are driven open or closed by OPEN or CLOSE digital output commands from the DCS to the valves.

18.0 CONTROL OF HP DRUM VENT VALVE

The HP Drum vent valve, HAD10AA101, is used during a cold startup to vent noncondensibles from the HP Drum and HP Drum steam outlet piping when the HP Evaporator begins steaming. When the average HP Drum pressure measured by pressure transmitters, HAD10CP001 & HAD10CP002, is 1.7237barg (25 psig), the on/off vent valve is closed.

19.0 CONTROL OF LP DRUM VENT VALVE

The LP Drum vent valve, HAD50AA101, is used during a cold startup to vent noncondensibles from the LP Drum and LP Drum steam outlet piping when the LP Evaporator begins steaming. When the average LP Drum pressure measured by pressure transmitters, HAD50CP001 & HAD50CP002, is 1.0342barg (15 psig), the on/off vent valve is closed.

20.0 EXTERNAL DEAERATOR VENT VALVE CONTROL

20.1 The external deaerator vent valve, LAA10AA102 is used to vent air (oxygen) from the external deaerator vent valve when the external deaerator begins running. When the deaerator pressure is greater than (14.63 psia) 0 psig, the external deaerator vent valve, LAA10AA102 is opened. When the deaerator pressure is lesser than (14.63 psia) 0 psig, the external deaerator vent valve, LAA10AA102 is closed.

21.0 CONTROL OF HP ECONOMIZER MANIFOLD VENT VALVE

The HP Economizer manifold vent valve, HAC20AA101, is a motor operated valve that is used to vent steam from the last economizer module to the HP Drum in the event that near steaming conditions in the economizer occur. Conditions for a potentially steaming economizer are detected by measuring the approach temperature, which is the difference between the HP drum saturation temperature and the HP economizer outlet temperature. The HP economizer outlet temperature is measured by thermocouple HAC20CT001. The HP Drum saturation temperature is determined in the DCS as a function of the average HP Drum saturation pressure measured by the drum pressure transmitters, HAD10CP001 & HAD10CP002. If the approach temperature is less than 3 ℃, the HP Economizer vent valve is opened. When the approach temperature is greater than 5 ℃ the HP Economizer vent valve is closed. Note that the manually operated HP Economizer module header vent valve, HAC20AA601, remains open at all times.

22.0 CONTROL OF LP ECONOMIZER MANIFOLD VENT VALVE

The LP Economizer manifold vent valve, HAC50AA101, is a motor operated valve that is used to vent steam from the last economizer module to the LP Drum in the event that near steaming conditions in the economizer occur. Conditions for a potentially steaming economizer are detected by measuring the approach temperature, which is the difference between the LP drum saturation temperature and the LP economizer outlet temperature. The LP economizer outlet temperature is measured by thermocouple HAC50CT001. The LP Drum saturation temperature is determined in the DCS as a function of the average LP Drum saturation pressure measured by the drum pressure transmitters, HAD50CP001 & HAD50CP002. If the approach temperature is less than 3 ℃, the LP Economizer vent valve is opened. When the approach temperature is greater than 5 ℃ the LP Economizer vent valve is closed. Note that the manually operated LP Economizer module header vent valve, HAC50AA601, remains open at all times.

23.0 CONTROL OF HP SH OUTLET LINE AUTOMATIC DRAIN POT

23.1 During startup and low load transient operating conditions, condensate may form in the steam piping when operation is near saturated steam conditions. In order to prevent downstream surface damage of HRSG heat transfer surface or the Steam Turbine due to condensate impingement, it is necessary to drain condensate from the piping as it forms. Automatic drain pot valve, HAH10AA204, downstream of the HP SH outlet line, is used to prevent condensation from damaging the HP Superheater during startup and/or upset conditions. Pressure transmitter, HAH10CP002, measures the HP SH line pressure. The corresponding steam saturation temperature (Tsat) is then determined as a function of the HP SH outlet line pressure. The HP SH outlet line drain pot temperature is measured by thermocouples, HAH10CT006 that is located in the drain pot upstream of the automatic drain valve. If the temperature difference between the HP SH outlet line drain pot temperature and the corresponding steam saturation temperature of the HP SH line pressure is less than or equal to 12 ℃ , automatic drain pot valves, HAH10AA204, is opened. When the temperature difference between the HP SH outlet line drain pot temperatures and the corresponding steam saturation temperature of the HP SH line pressure is greater than 14 ℃ , automatic drain pot valve, HAH10AA204, is closed.

24.0 CONTROL OF HP SH ATTEMPERATOR AUTOMATIC DRAIN POT

24.1 During startup and low load transient operating conditions, condensate may form in the steam piping, when operation is near saturated steam conditions. In order to prevent downstream surface damage of HRSG heat transfer surface or the Steam Turbine due to condensate impingement, it is necessary to drain condensate from the piping as it forms. Automatic drain pot valve, HAH10AA203, downstream of the HP attemperator, is used to prevent condensation from damaging the HP Superheater during startup and/or upset conditions. Pressure transmitter, HAH10CP001, measures the HP attemperator header pressure. The corresponding steam saturation temperature (Tsat) is then determined as a function of the HP attemperator header pressure. The HP attemperator drain pot temperature is measured by thermocouple, HAH10CT005 that is located in the drain pot upstream of the automatic drain valve. If the temperature difference between the HP attemperator drain pot temperature and the corresponding steam saturation temperature of the HP attemperator header pressure is less than or equal to 10 ℃ , automatic drain pot valve, HAH10AA203, is opened. When the temperature difference between the HP attemperator drain pot temperature and the corresponding steam saturation temperature of the HP attemperator header pressure is greater than 12℃ , automatic drain pot valve, HAH10AA203, is closed.

25.0 CONTROL OF HP MODULE MS302 AND MS303 CROSSOVER AUTOMATIC DRAIN POT

25.1 During startup and low load transient operating conditions, condensate may form in the steam piping, when operation is near saturated steam conditions. In order to prevent downstream surface damage of HRSG heat transfer surface or the Steam Turbine due to condensate impingement, it is necessary to drain condensate from the piping as it forms. Automatic drain pot valve, HAH10AA202, located in the HP SH module MS302 and MS303 crossover is used to remove condensation from the HP SH modules MS302 and MS303 and prevent damage to the modules MS302 and MS303 tubes and piping during startup and/or upset conditions. Pressure transmitters, HAD10CP001 & HAD10CP002, measure the HP drum pressure. When HP drum average pressure is greater than 4.13685barg (60 Psig), automatic drain valve, HAH10AA202, is closed. When HP drum average pressure is less than or equal to 4.13685barg (60 Psig), automatic drain valve, HAH10AA202, is opened. During warm start up, operator opens the valve and keeps the valve to be opened status about 5 minutes, then operator closes the drain valve. During hot start up, operator opens the valves and keeps the valve to be opened status about 3 minutes, then operator closes the drain valve.

26.0 CONTROL OF LP SH OUTLET LINE AUTOMATIC DRAIN POT BEFORE STEAM STOP VALVE

26.1 During startup and low load transient operating conditions, condensate may form in the steam piping, when operation is near saturated steam conditions. In order to prevent downstream surface damage of HRSG heat transfer surface or the Steam Turbine due to condensate impingement, it is necessary to drain condensate from the piping as it forms. Automatic drain pot valve, HAH50AA202, downstream of the LP SH outlet line, is used to prevent condensation from damaging the LP Superheater during startup and/or upset conditions. The pressure transmitter, HAH50CP001, measures the LP SH line pressure. The corresponding steam saturation temperature (Tsat) is then determined as a function of the LP SH outlet line pressure. The LP SH outlet line drain pot temperature is measured by thermocouple, HAH50CT002 that is located in the drain pot upstream of the automatic drain valve. If the temperature difference between the LP SH outlet line drain pot temperature and the corresponding steam saturation temperature of the LP SH line pressure is less than or equal to 10℃ , automatic drain pot valve, HAH50AA202, is opened. When the temperature difference between the LP SH outlet line temperature and the corresponding steam saturation temperature of the LP SH line pressure is greater than 12℃ , automatic drain pot valve, HAH50AA202, is closed.

27.0 CONTROL OF MOTOR OPERATED OPEN/CLOSE VALVES

27.1 The open/close motor operated valves are commanded opened or closed from the DCS per the User's control system design and consistent with startup (i.e., hot, cold, or warm start operation), normal start

up operation, normal shutdown operation. All of the open/close motor operated valves' motor starters are integral to the motor operators.

27.2 The Operator or DCS control system initiates an OPEN or CLOSE command to the motor operated valve. A 120 VAC signal to the motor operator control circuitry is switched on or off according to the corresponding OPEN or CLOSE digital command signal from the DCS, which then allows the respective valve to be powered open or close.

The open/close motor operated valves are:

HAD10AA101, HP DRUM VENT VALVE
HAD10AA102, HP DRUM INTERMITTENT BLOWDOWN VALVE
HAC20AA101, HP ECONOMIZER VENT VALVE
LAB10AA102, HP ECONOMIZER INLET BLOCK VALVE
LAE10AA101, HP SPRAY INTER-STAGE BLOCK VALVE
HAD50AA101, LP DRUM VENT VALVE
HAD50AA102, LP DRUM INTERMITTENT BLOWDOWN VALVE
HAC50AA101, LP ECONOMIZER VENT VALVE
LAB50AA101, LP ECONOMIZER INLET BLOCK VALVE
LAA10AA102, DA TANK VENT VALVE

28.0 HRSG SIGNAL MONITORING FOR PERFORMANCE INDICATION AND ALARMS (AS REQUIRED)

The following signals, which have not already been discussed in section 1 above per NFPA 85 requirements, are available for indication at the Operator Interface Machine for HRSG performance parameter indication and alarming as required.

1. HP SH Attemperator Steam Inlet Temperature (Temperature Thermocouple, HAH10CT001, which inputs a type E thermocouple input signal to the DCS).
2. HP Economizer Inlet Temperature (Temperature Thermocouple, LAB10CT001, which inputs a type E thermocouple input signal to the DCS).
3. HP Economizer Outlet Temperature (Temperature Thermocouple, HAC20CT001, which inputs a type E thermocouple input signal to the DCS).
4. HP SH Attemperator Steam Inlet Pressure (Pressure transmitter, HAH10CP001, which inputs a 4-20 mA signal to the DCS).
5. HP Economizer Feedwater Inlet Pressure (Pressure transmitter, LAB10CP001, which inputs a 4-20 mA signal to the DCS).
6. LP Economizer Feedwater Outlet Temperature (Temperature Thermocouple, HAC50CT001, which inputs a type E thermocouple input signal to the DCS).

7. LP Economizer Feedwater Inlet Temperature (Temperature Thermocouple, LAB50CT001, which inputs a type E thermocouple input signal to the DCS).
8. LP Economizer Feedwater Inlet Pressure (Pressure transmitter, LAB50CP001, which inputs a 4-20 mA signal to the DCS).
9. HP SH Attemperator Steam Outlet Temperature (Temperature Thermocouple, HAH10CT002, which inputs a type E thermocouple input signal to the DCS).
10. HP Steam Outlet Temperature (Temperature Thermocouples, HAH10CT003 & HAH10CT004 which input type E thermocouple input signals to the DCS).
11. HP Feedwater Flow (Flow transmitter, LAB10CF001, which inputs a 4-20 mA signal to the DCS).
12. HP Steam Outlet Pressure (Pressure transmitters, HAH10CP002, which inputs 4-20 mA signals to the DCS).
13. LP Steam Outlet Temperature (Temperature Thermocouple, HAH50CT001, which inputs a type E thermocouple input signal to the DCS).
14. LP Steam Outlet Pressure (Pressure transmitters, HAH50CP001, which input 4-20 mA signals to the DCS).
15. LP Feedwater Flow (Flow transmitters, LAB50CF001, which inputs a 4-20 mA signal to the DCS).
16. LP Economizer Feedwater Outlet Temperature (Temperature Thermocouple, HAC50CT001, which inputs a type E thermocouple input signal to the DCS).
17. LP Economizer Feedwater Inlet Temperature (Temperature Thermocouple, LAB50CT001, which inputs a type E thermocouple input signal to the DCS).
18. LP Economizer Feedwater Inlet Line Pressure (Pressure Transmitter, LAB50CP001, which inputs a 4-20mA signal to the DCS).
19. Blowdown Tank temperature (Temperature Thermocouple, LCQ10CT001 which inputs a type E thermocouple input signal to the DCS)
20. External Deaerator Level (Level transmitters, LAA10CL001 & LAA10CL002 , which inputs 4-20mA signals to the DCS)
21. External Deaerator Temperature(Temperature Thermocouple, LAA10CT001 which inputs a type E thermocouple input signal to the DCS)
22. External Deaerator Pressure (Pressure transmitters, LAA11CP001, which input 4-20 mA signals to the DCS).

23. HRSG Duct Gas Temperature (individual temperatures and average temperature of four Temperature Thermocouples, HNA11CT001 Thru HNA11CT004, which inputs a type E thermocouple input signal to the DCS).
24. HRSG Stack Temperature (individual temperatures and average temperature of four Temperature Thermocouples, HNE10CT001& HNE10CT002, which inputs a type E thermocouple input signal to the DCS).
25. HRSG Duct Exhaust Gas Pressure (HRSG Duct Pressure based on either of two HRSG Duct pressure transmitter, HNB10CP001 & HNB10CP004, which send 4-20 mA signals to the DCS)

29.0 APPENDIX C - DENSITY COMPENSATED STEAM DRUM/DEAERATOR LEVEL EQUATIONS

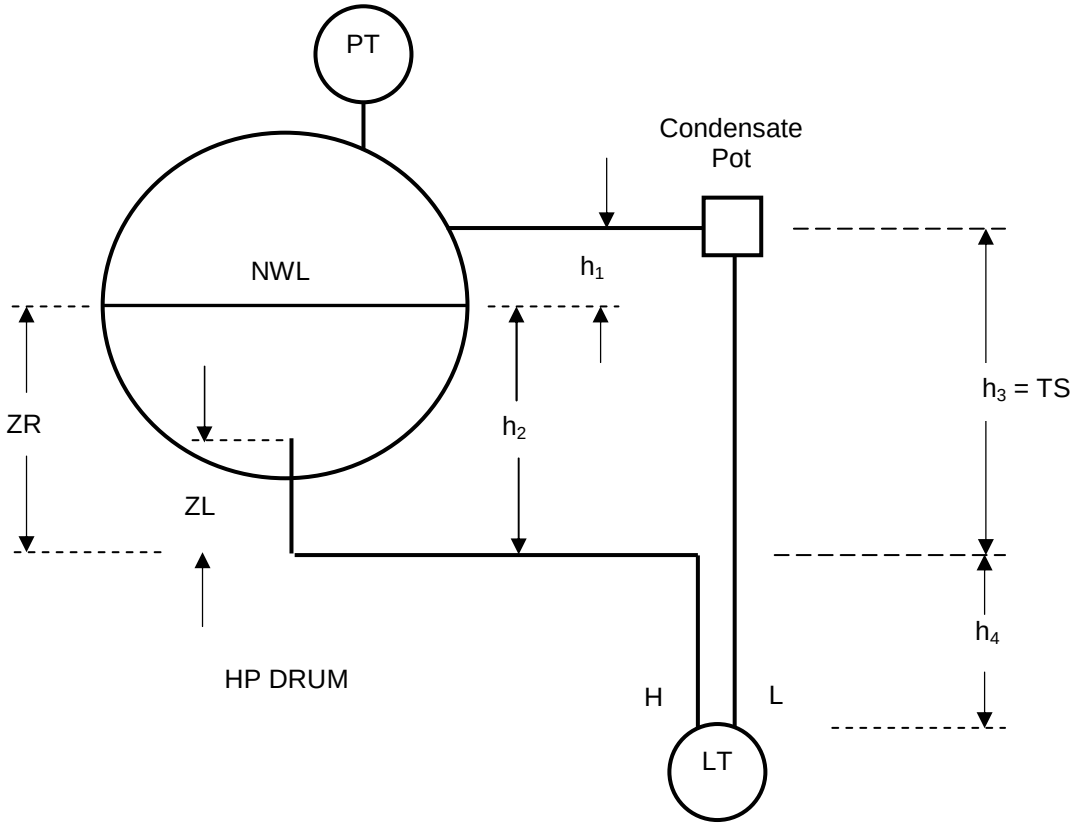

FIGURE 1

Differential pressure transmitters are used to measure the liquid level in the steam drum. Pressure transmitters are used to measure the steam pressure in the steam drum. In order to determine the correct drum level, calculations are required to density compensate the drum level measurement because of significant density differences between the drum water and the water in the sensing lines to the transmitter. In order to determine the density compensation of the drum level measurement, steam and water density calculations based on ASME Steam Table data must be done using the drum pressure measurement.

Each drum level transmitter is calibrated with an elevated zero in order to produce a 'reverse' differential pressure (dp) signal such that the dp is a minimum (or negative value) when the drum is dry and a maximum (or zero value) when the drum is full. A 'reverse' dp signal is an increasing dp signal as drum level increases. A

'reverse' dp signal is obtained by connecting the high pressure side of the transmitter to the low drum connection and the low pressure side of the transmitter to the high drum connection as shown in Figure 1.

The dp of the transmitter is the pressure on the High Pressure tap minus the pressure on the Low Pressure tap of the transmitter. The pressures on the High Pressure and Low Pressure taps are:

1) $P,high = h_1*(SG_1) + h_2*(SG_2) + h_4*(SG_0) + P_D$

2) $P,low = h_3*(SG_0) + h_4*(SG_0) + P_D$

where,

h_1 = height of steam in drum, in.

h_2 = height of water in drum, in.

h_3 = height of water between drum level transmitter tap to tap connections.

h_4 = height of water from low drum tap connection to drum level transmitter.

SG_1 = Specific Gravity of steam at drum operating temperature and pressure.

SG_2 = Specific Gravity of water at drum operating temperature and pressure.

SG_0 = Specific Gravity of water in sensing lines at ambient temperature and drum operating pressure.

P_D = Drum Pressure, psig.

The transmitter dp is:

3) $dp = (P,high – P,low) = (h_1*(SG_1) + h_2*(SG_2) + h_4*(SG_0) + P_D) – (h_3*(SG_0) + h_4*(SG_0) + P_D)$

$= h_1*(SG_1) + h_2*(SG_2) - h_3*(SG_0)$

Letting $h_1 = h_3 – h_2$, the equation for dp becomes--

$dp = (h_3 – h_2)*(SG_1) + h_2*(SG_2) - h_3*(SG_0)$, and

$dp = h_3*(SG_1) – h_2*(SG_1) + h_2*(SG_2) - h_3*(SG_0) = (SG_2- SG_1)* h_2 + (SG_1- SG_0)* h_3$

Defining a new variable for h_3 as TS, the equation for dp becomes:

4) $dp = (SG_2- SG_1)* h_2 + (SG_1- SG_0)* TS$

where,

TS = height of water in the reference leg between drum level transmitter tap to tap connections, in.

The value of TS is also the value of the level transmitter span, in. H_2O.

It is common practice to reference the water level in the drum from normal water level (NWL). All readings are therefore + or – readings from NWL with NWL equal to zero. A new variable, h_c, is defined as the

density-compensated drum level referenced from NWL. ZR, the height of water from the lower drum level connection to NWL, is subtracted from the value for h_2 to determine h_c. The result is:

5) $h_c = h_2 – ZR$, or

6) $h_2 = h_c + ZR$

Substituting the equation for h_2 above into the equation for dp, the resulting equation for dp is:

7) $dp = (SG_2 - SG_1)* (h_c + ZR) + (SG_1 - SG_0)* TS$

where,

h_c = density-compensated drum level referenced from NWL, in.

ZR = height of water from the lower drum level connection to NWL, in.

Also, it is common practice that the dp signal itself is scaled in the DCS such that a positive readout value of the differential pressure measurement is obtained with a lower range value of zero and a positive upper range value equal to the transmitter span value. The differential pressure, TS', based on a height of water in the reference leg between drum level transmitter tap to tap connections, is added to the value of the level transmitter dp. The resulting equation is:

8) dp,DCS = dp + TS'

where,

dp,DCS = the scaled, positive readout value of the drum level dp signal in the DCS, in H_2O.

It may be required that the drum level corresponding to the Low Level Cutout or some level above the low level drum tap is used to reference the lowest level for measurement and indication at the Operator Interface Machine. For instance on steam drums currently designed today it is common that the pipe nozzle instrument connection is installed into the bottom of the drum. The nozzle exists outside the drum, of course, but some length of the pipe nozzle protrudes into the drum as well. However the entire height of water in this vertical run of pipe nozzle is not representative of the true water level in the drum. To correct this discrepancy, the differential pressure, ZL', based on the ZL height of water in the low drum vertical pipe nozzle connected to the level transmitter sensing line, is subtracted from the value of dp,DCS to equal dp,DCS'. ZL' is the differential pressure measurement at reference temperature and pressure. The new range of dp,DCS' is reduced accordingly by the value of ZL'. The span of dp,DCS', in this case, is equal to the distance from the top of the level transmitter's lower drum pipe nozzle connection to the upper drum level tap connection. (Note: If the level

transmitter bottom drum tap is not installed in the bottom of the drum but, instead, is installed in the end of the drum as a horizontal connection, ZL' is equal to zero. The span of dp,DCS', in this case, is equal to the tap to tap distance from the level transmitter's lower and upper horizontal drum level tap connections.) The resulting equation is:

9) dp,DCS' = dp,DCS – ZL' = dp + TS' – ZL'

Rearranging and solving for dp, the equation becomes--

10) $dp = dp,DCS' + ZL' - TS' = (SG_2 - SG_1)* (h_c + ZR) + (SG_1 - SG_0)* TS$

where,

ZL' = dp based on height of water at reference temperature and pressure above the low level drum tap (for example, the low drum vertical pipe nozzle connected to the level transmitter sensing line), in. H_2O

and,

dp, DCS' = the scaled, positive readout value of the drum level dp signal in the DCS with a span equal to the height of water from the top of the level transmitter's lower drum pipe nozzle connection to the upper drum level tap connection, in. H_2O.

Note that the lower range value for h_c corresponds to the value of h_c with respect to NWL when dp, DCS' is zero, i.e., when the drum level is at the top of the level transmitter lower drum pipe nozzle connection.

Upon rearranging the equation above and solving for h_c, the equation for the density-compensated drum level referenced from NWL is:

11) $h_c = [(dp,DCS' + ZL' - TS') + (SG_0 - SG_1) * TS] / (SG_2 - SG_1) - ZR$

Lastly, at low pressures near atmospheric pressure it is convenient to use the uncompensated drum level measurement. The uncompensated level measurement inaccuracy is not significant at low pressures. Until sufficient steam is produced in the boiler the density compensated drum level measurement using specific gravity data may lead to inaccuracies depending on how the ASME steam tables are characterized to determine steam and water specific gravities as functions of saturation drum pressure. It is convenient to select a minimum drum pressure, i.e., 0.3447 barg (5 psig), for which the density compensated drum level equations are used; the uncompensated drum level is determined at drum pressures less than 0.3447 barg (5 psig). Using equation 10) above the equation is expanded to separate the specific gravity terms.

12) $dp,DCS' + ZL' - TS' = (SG_2) * (h_c + ZR) - (SG_1)* (h_c + ZR) + (SG_1) * TS - (SG_0)* TS$

The effect of steam density on the measurement of drum level at low drum pressure less than 1.3790bara (20 psia) is insignificant and therefore SG_1 is set equal to zero. The specific gravities of water at saturation pressures less than 1.3790bara (20 psia) are nearly equal to 1.0 and SG_2 and SG_0 are set equal to 1.0. Substituting these values into eq. 12) above the following equations can be written.

13) $dp,DCS' + ZL' – TS' = 1.0 * (h_c + ZR) - (0)* (h_c + ZR) + (0) * TS – (1.0)* TS$

14) $dp,DCS' + ZL' – TS' = (h_c + ZR) – TS$

Since TS' and TS are quantitatively equal they cancel one another; and the following equation for the uncompensated drum level can be determined.

15) $h_c = dp,DCS' + ZL' – ZR$

Summarizing, the following equations are used to determine the compensated and uncompensated drum level measurements.

9) $dp,DCS' = dp + TS' – ZL'$

11) $h_c = [(dp,DCS' + ZL' – TS') + (SG_0 – SG_1) * TS] / (SG_2 – SG_1) – ZR$; ($P_{avg,drum} > 5$ psig)

15) $h_c = dp,DCS' + ZL' – ZR$; ($P_{avg,drum} <= 5$ psig)

where,

h_c = density-compensated drum level referenced from NWL, in. H_2O.

ZR = height of water from the lower drum level connection to NWL, in.

dp, DCS' = the scaled, positive readout value of the drum level dp signal in the DCS with a span equal to the height of water from the top of the level transmitter's lower drum pipe nozzle connection to the upper drum level tap connection, in. H_2O.

ZL' = dp based on height of water at reference temperature and pressure above the low level drum tap (for example, the low drum vertical pipe nozzle connected to the level transmitter sensing line), in. H_2O

TS = height of water in the reference leg between drum level transmitter tap to tap connections, in.

TS' = dp based on a height of water in the reference leg between drum level transmitter tap to tap connections, in. H_2O.

SG_1 = Specific Gravity of steam at drum operating temperature and pressure.

SG_2 = Specific Gravity of water at drum operating temperature and pressure.

SG_0 = Specific Gravity of water in sensing lines at ambient temperature (i.e., 37.78℃(100 ℉)) and drum operating pressure.

For project 17460, the values for the following variables used in the equation for the density compensated drum level measurement referenced from NWL and the calibrated level transmitter lower and upper range values are:

HRSG Drum	**HP**	**LP**
Variable		
ZR, (in.)	**1029mm (40.5 in)**	**558.8mm (22in)**
TS, (in.)	**1258mm (49.5 in)**	**787mm (31 in)**

6.0. GAS SIDE PRESSURE DROP

The static gas side pressure drop for each case is given in the following table.

VPI Case	Static Pressure Drop (In.WC)			
	Modules	DUCT	STK	Total
G001.100%.33C.2U	9.3	0.14	1.446	10.886
C001.100%.33C.2U	7.911	0.117	1.16	9.188
C002.100%.33C.2U	7.831	0.117	1.158	9.106
C003.100%.33C.1U	7.601	0.117	1.155	8.873
C004.60%.33C.2U	4.458	0.066	0.518	5.042
C005.100%.33C.2U	9.27	0.14	1.445	10.855
G01N.100%.15C.2U	9.25	0.144	1.345	10.739
G02N.100%.15C.2U	9.188	0.144	1.346	10.678
G03N.60%.15C.2U	4.632	0.074	0.486	5.191
G04N.50%.15C.2U	4.133	0.065	0.378	4.575
G05N.100%.33C.2U	7.784	0.119	1.135	9.038
G06N.100%.33C.2U	7.694	0.119	1.133	8.946
G07N.60%.33C.2U	4.397	0.067	0.505	4.969
G08N.60%.33C.2U	4.329	0.067	0.511	4.907
G09N.50%.33C.2U	3.797	0.058	0.399	4.253
G10N.50%.33C.2U	3.734	0.058	0.407	4.198
G11N.100%.33C.2U	9.212	0.143	1.428	10.782
G12N.100%.33C.2U	9.12	0.143	1.423	10.685
G13N.100%.33C.2U	9.254	0.143	1.46	10.856
G14N.100%.33C.2U	9.233	0.143	1.433	10.81
G15N.100%.33C.2U	9.136	0.143	1.427	10.706
G16N.100%.40C.1U	8.877	0.143	1.414	10.434
G17N.100%.40C.1U	8.807	0.143	1.409	10.359
G18N.100%.40C.2U	6.4	0.097	0.893	7.389
G19N.100%.40C.2U	6.313	0.097	0.894	7.304
G20N.60%.40C.2U	3.956	0.06	0.467	4.483
G21N.50%.40C.2U	3.563	0.053	0.378	3.993
G22N.100%.33C.2U	9.184	0.143	1.458	10.784
G23N.100%.33C.2U	9.186	0.143	1.458	10.787
G24N.100%.40C.2U	6.368	0.097	0.892	7.357

VPI Case	Static Pressure Drop (In.WC)			
	Modules	DUCT	STK	Total
G002.100%.33C.2U	9.125	0.142	1.422	10.689
G003.100%.33C.2U	7.714	0.121	1.133	8.968
G003B.100%.33C.2U	7.828	0.119	1.151	9.098
G003BE.100%.33C.2U	7.764	0.119	1.15	9.032
G004.60%.33C.2U	4.404	0.067	0.505	4.976
G004B.60%.33C.2U	4.432	0.067	0.476	4.975
G004BE.60%.33C.2U	4.378	0.067	0.477	4.922
G005.60%.33C.2U	5.166	0.081	0.655	5.902
G011.100%.33C.1U	8.744	0.142	1.412	10.298
G013.100%.33C.1U	7.384	0.119	1.13	8.632
G013B.100%.33C.1U	7.457	0.119	1.147	8.723
G014.60%.33C.1U	4.177	0.067	0.525	4.768
G014B.60%.33C.1U	4.225	0.067	0.479	4.771
G015.60%.33C.1U	4.898	0.081	0.67	5.649
G006.50%.33C.2U	3.873	0.059	0.411	4.342
G006B.50%.33C.2U	3.899	0.059	0.373	4.33
G006BE.50%.33C.2U	3.848	0.059	0.375	4.282
G016.50%.33C.2U	3.676	0.059	0.432	4.167
G007.100%.12C.2U	9.296	0.146	1.342	10.784
G008.100%.40C.2U	6.356	0.096	0.889	7.341
G009.50%.40C.2U	3.511	0.052	0.373	3.936
G019.50%.40C.1U	3.329	0.052	0.395	3.776

7.0. HEATING SURFACE DATA

Section Name	HPSH1	HPSH2	HPSH3	HPEV1	HPEV2	HPEV3
Heating Surface, sq. meter	783.61	1108.30	1108.30	1375.85	2063.77	2063.77
Finned Length of Tubes, m	15.24	15.24	15.24	15.24	15.24	15.24
Number of Tubes/row	29	29	29	36	36	36
Number of passes/module	1	1	1	1	1	1
Number of Rows	2	2	2	2	3	3
Tube O.D., mm	38.1	38.1	38.1	38.1	38.1	38.1
Tube Min Wall, mm	4.064	3.048	2.667	2.667	2.667	2.667
Tube Material	SA-213 T22	SA-213 T22	SA-213 T11	SA-178 A	SA-178 A	SA-178 A
Fin Type (0/1/2, bare/solid/ser.)	1	2	2	2	2	2
Fins/mm	0.268	0.287	0.287	0.287	0.287	0.287
Fin Height, mm	9.525	12.700	12.700	12.700	12.700	12.700
Fin Thickness, mm	1.016	1.016	1.016	1.016	1.016	1.016
Fin Material	T409	T409	T409	CS	CS	CS
Outlet Hdr. O.D., mm	219.075	219.075	219.075	219.075	219.075	219.075
Outlet Hdr. Thick., mm	25.400	22.225	18.237	15.062	15.062	15.062
Outlet Hdr. Material	SA-335 P22	SA-335 P22	SA-335 P11	SA-106 C	SA-106 C	SA-106 C
Inlet Hdr. O.D., mm	219.075	219.075	219.075	219.075	219.075	219.075
Inlet Hdr. Thick., mm	25.400	22.225	18.237	15.062	15.062	15.062
Inlet Hdr. Material	SA-335 P22	SA-335 P22	SA-335 P11	SA-106 C	SA-106 C	SA-106 C
Box #	Box 1	Box 1	Box 1	Box 1	Box 1	Box 1

Section Name	HPEV4	HPEV5	HPEC1	HPEC2	HPEC3	LPSH1
Heating Surface, sq. ft	2063.77	2063.77	1375.85	2063.77	2063.77	380.98
Finned length of Tubes, ft	15.24	15.24	15.24	15.24	15.24	15.24
Number of Tubes/row	36	36	36	36	36	36
Number of passes/module	1	1	3	5	5	1
Number of Rows	3	3	2	3	3	1
Tube O.D., in	38.1	38.1	38.1	38.1	38.1	38.1
Tube Min Wall, in	2.667	2.667	2.667	2.667	2.667	2.667
Tube Material	SA-178 A	SA-178 A	SA-178 A	SA-178 A	SA-178 A	SA-178 A
Fin Type	2	2	2	2	2	1
Fins per inch	0.287	0.287	0.287	0.287	0.287	0.201
Fin Height, in	12.700	12.700	12.700	12.700	12.700	9.525
Fin Thickness, in	1.016	1.016	1.016	1.016	1.016	1.016
Fin Material	CS	CS	CS	CS	CS	CS
Outlet Hdr. O.D., in	219.075	219.075	219.075	219.075	219.075	219.075
Outlet Hdr. Thick., in	15.062	15.062	15.062	15.062	15.062	10.312
Outlet Hdr. Material	SA-106 C	SA-106 C	SA-106 C	SA-106 C	SA-106 C	SA-106 B
Inlet Hdr. O.D., in	219.075	219.075	219.075	219.075	219.075	219.075
Inlet Hdr. Thick., in	15.062	15.062	15.062	15.062	15.062	10.312
Inlet Hdr. Material	SA-106 C	SA-106 C	SA-106 C	SA-106 C	SA-106 C	SA-106 B
Location	Box 1	Box 1	Box 1	Box 1	Box 2	Box 2

Section Name	HPEC4	HPEC5	LPEV1	LPEV2	LPEV3	LPEV4
Heating Surface, sq. ft	1375.85	2063.77	1935.76	2063.77	2063.77	2063.77
Finned length of Tubes, ft	15.24	15.24	15.24	15.24	15.24	15.24
Number of Tubes/row	36	36	36	36	36	36
Number of passes/module	5	5	1	1	1	1
Number of Rows	2	3	3	3	3	3
Tube O.D., in	38.1	38.1	38.1	38.1	38.1	38.1
Tube Min Wall, in	2.667	2.667	2.667	2.667	2.667	2.667
Tube Material	SA-178 A	SA-178 A	SA-178 A	SA-178 A	SA-178 A	SA-178 A
Fin Type	2	2	2	2	2	2
Fins per inch	0.287	0.287	0.268	0.287	0.287	0.287
Fin Height, in	12.700	12.700	12.700	12.700	12.700	12.700
Fin Thickness, in	1.016	1.016	1.016	1.016	1.016	1.016
Fin Material	CS	CS	CS	CS	CS	CS
Outlet Hdr. O.D., in	219.075	219.075	219.075	219.075	219.075	219.075
Outlet Hdr. Thick., in	15.062	15.062	10.312	10.312	10.312	10.312
Outlet Hdr. Material	SA-106 C	SA-106 C	SA-106 B	SA-106 B	SA-106 B	SA-106 B
Inlet Hdr. O.D., in	219.075	219.075	219.075	219.075	219.075	219.075
Inlet Hdr. Thick., in	15.062	15.062	10.312	10.312	10.312	10.312
Inlet Hdr. Material	SA-106 C	SA-106 C	SA-106 B	SA-106 B	SA-106 B	SA-106 B
Location	Box 2	Box 2	Box 2	Box 2	Box 2	Box 2

Section Name	HPEC6	HPEC7	LPEC1	HPEC8	LPEC2	HPEC9
Heating Surface, sq. ft	761.97	2063.77	1034.72	2063.77	1375.85	2063.77
Finned length of Tubes, ft	15.24	15.24	15.24	15.24	15.24	15.24
Number of Tubes/row	36	36	36	36	36	36
Number of passes/module	5	5	6	5	6	5
Number of Rows	2	3	2	3	2	3
Tube O.D., in	38.1	38.1	38.1	38.1	38.1	38.1
Tube Min Wall, in	2.667	2.667	2.667	2.667	2.667	2.667
Tube Material	SA-178 A	SA-178 A	SA-178 A	SA-178 A	SA-178 A	SA-178 A
Fin Type	1	2	1	2	2	2
Fins per inch	0.201	0.287	0.287	0.287	0.287	0.287
Fin Height, in	9.525	12.700	9.525	12.700	12.700	12.700
Fin Thickness, in	1.016	1.016	1.016	1.016	1.016	1.016
Fin Material	CS	CS	CS	CS	CS	CS
Outlet Hdr. O.D., in	219.075	219.075	219.075	219.075	219.075	219.075
Outlet Hdr. Thick., in	15.062	15.062	10.312	15.062	10.312	15.062
Outlet Hdr. Material	SA-106 C	SA-106 C	SA-106 B	SA-106 C	SA-106 B	SA-106 C
Inlet Hdr. O.D., in	219.075	219.075	219.075	219.075	219.075	219.075
Inlet Hdr. Thick., in	15.062	15.062	10.312	15.062	10.312	15.062
Inlet Hdr. Material	SA-106 C	SA-106 C	SA-106 B	SA-106 C	SA-106 B	SA-106 C
Location	Box 2	Box 2	Box 3	Box 3	Box 3	Box 3

Section Name	LPEC3	HPECA	LPEC4	HPECB	HPECC	HPECD	LPEC3
Heating Surface, sq. ft	1375.85	2063.77	1375.85	2063.77	2063.77	2063.77	1375.85
Finned length of Tubes, ft	15.24	15.24	15.24	15.24	15.24	15.24	15.24
Number of Tubes/row	36	36	36	36	36	36	36
Number of passes/module	6	5	7	5	5	5	6
Number of Rows	2	3	2	3	3	3	2
Tube O.D., in	38.1	38.1	38.1	38.1	38.1	38.1	38.1
Tube Min Wall, in	2.667	2.667	2.667	2.667	2.667	2.667	2.667
Tube Material	SA-178 A	SA-178 A	SA-178 A	SA-178 A	SA-178 A	SA-178 A	SA-178 A
Fin Type	2	2	2	2	2	2	2
Fins per inch	0.287	0.287	0.287	0.287	0.287	0.287	0.287
Fin Height, in	12.700	12.700	12.700	12.700	12.700	12.700	12.700
Fin Thickness, in	1.016	1.016	1.016	1.016	1.016	1.016	1.016
Fin Material	CS	CS	CS	CS	CS	CS	CS
Outlet Hdr. O.D., in	219.075	219.075	219.075	219.075	219.075	219.075	219.075
Outlet Hdr. Thick., in	10.312	15.062	10.312	15.062	15.062	15.062	10.312
Outlet Hdr. Material	SA-106 B	SA-106 C	SA-106 B	SA-106 C	SA-106 C	SA-106 C	SA-106 B
Inlet Hdr. O.D., in	219.075	219.075	219.075	219.075	219.075	219.075	219.075
Inlet Hdr. Thick., in	10.312	15.062	10.312	15.062	15.062	15.062	10.312
Inlet Hdr. Material	SA-106 B	SA-106 C	SA-106 B	SA-106 C	SA-106 C	SA-106 C	SA-106 B
Location	Box 3	Box 3	Box 3	Box 3	Box 3	Box 3	Box 3

8.0. BOILER FEEDWATER AND BOILER WATER

Each plant location has distinctive water sources and issues. For this reason, boiler feedwater is beyond the control of the boiler manufacturer. It is the recommendation of Vogt Power that a competent consultant that specializes in boiler water treatment be engaged to advise the owner on the most economical conditioning of the water supply for boiler use.

Properly conditioned water and appropriate internal chemical treatment will give many years of trouble free boiler operation. The expense of a water consultant is an insurance against scale deposits and/or corrosion that could result tube failure and extended boiler outages.

Boiler water must meet certain minimum requirements in order to prevent scale or corrosion, and to control sludge and foaming. The following comments are offered for reference, but are in no way to be construed as recommendations of Vogt Power, Inc.

8.1 Boiler Feedwater

Generally boiler feedwater is filtered and de-ionized prior to its introduction to the steam cycle as make-up. Make-up water is required to offset the losses that occur due to valve packing leaks, turbine gland leaks, boiler feed pump gland leakage, blowdown, or other vents in the steam cycle. These losses must be replenished over time.

Condensate is one of the best sources of make-up water, but can contain contaminants such as acidic gases that make it corrosive to metal surfaces. Other contaminants from industrial plants can range from hydrocarbons to oil. A water consultant can assist in determining the treatment required to purify this valuable recycled water.

8.2 Conditioning

8.2.1 Control of pH

Acidic pH values will cause attacks on the boiler metal with resultant metal deterioration. The obvious control measure to prevent such corrosion is neutralization of acidic characteristics by the use of alkali.

Except in the special cases of corrosive attack involving high pressure boiler operation, experience suggests a boiler water pH of approximately 10.5-11.0 will prevent acid attack. This pH value is sufficiently high to stifle acidic attack on boiler

metal and also provides a sufficiently alkaline environment in the boiler water to aid in the precipitation of scale forming salts.

Note that the pre-boiler equipment (feedwater heater, pumps, piping, etc.) may be constructed of a variety of materials that may include copper alloys, carbon steel, stainless steel and phosphor bronze. Proper pH, usually in the 8.0 to 9.5 range, may be more appropriate. The water treatment consultant should account for the different components in different areas of the plant.

8.2.2 Control of Oxygen

Free oxygen dissolved in the boiler feedwater can attack carbon steels. The corrosion will most likely present as pitting of internal surfaces. Oxygen pitting is especially dangerous, because although the pits cover a small surface area, they are very deep compared to other types of surface corrosion, and can lead to rapid failure. Idle boilers which are not properly stored or “laid up” will corrode until either the oxygen has been used up or the boiler is returned to service. This can significantly shorten boiler life.

Oxygen can be controlled through deaeration and/or chemical scavenging. Oxygen content should be between 2.0 and 7.0 ppb by wt. at the economizer or feed water heater inlets. A mechanical deaerator can achieve this concentration if all spray nozzles and trays are in place and the steam supply is adequate. Chemical oxygen scavengers can be used to further reduce dissolved oxygen.

8.3 Contaminants

8.3.1 Magnetic Oxides

If magnetic oxides are present in the feedwater, they can be removed by filtering through resin beds or by electro-magnet filters. Magnetic oxides are typically iron compounds such as iron oxide or iron silicates. Deposits of iron oxide are typically found in boilers operating with very pure feedwater.

The usual source of iron oxide deposits lies in corrosion external to the boiler. Corrosion can leave iron in solution in the condensate or feedwater, which can then precipitate out under the higher temperature and alkalinity conditions of the boiler water.

Iron dissolved in the condensate can also combine with silica present in the boiler water and form iron silicate scales.

While internal corrective measures such as the use of organic sludge conditioning agents may be applied to minimize iron oxide deposits in the HRSG, the basic solution to the problem lies in correcting the corrosive conditions which put the iron into solution. The corrosion is most likely cause by dissolved oxygen and carbon dioxide. Dissolved gasses should be reduced to appropriate levels through the use of mechanical and/or chemical deaeration.

In some cases, the source of iron oxides and iron silicate boiler corrosion is not the result of corrosion external to the boiler. Corrosive attack on the boiler metal by high caustic concentrations or dissolved oxygen may also be the cause of this problem.

8.3.2 Oil

Oil is not typically found in boiler feedwater, and measures should be taken at every opportunity to avoid introducing oil into the system. Oil may be accidentally introduced into feedwater through pump or steam turbine lubrication system leaks or during maintenance activities. Due to oil's tendency to float on water, it is difficult or impossible to remove oil from boiler water by blowdown, or to obtain a representative sample of boiler water for oil content testing. There is no easy way to confirm the presence of oil in the water. Its presence is revealed through the problems it causes.

Some of the most serious boiler operation problems such as tube warping, ruptures, localized overheating, foaming, priming, and scale formation can be traced to oil contamination. Overheating of boiler heating surfaces can occur when the oil forms a thin film on the internal surface, which acts as an insulator and retards the heat transfer process, resulting in an increase in tube metal temperature. Overheating can lead to pressure part warping and/or ruptures.

Foaming is the formation of foam or bubbles in the boiler, when steam bubbles do not coalesce and break. Foaming can be caused by excessive dissolved and suspended boiler water solids, sudden or dramatic load swings, or by some form of oil or soap. Animal fatty oils form soaps in the presence of boiler water alkalinities, thus creating foam in the boiler water. The foam produced may entirely fill the boiler drum steam space or just float on the surface in a thin layer. In either case, this foam causes appreciable boiler water entrainment, leading to the carryover of liquid water out of the drum into the superheaters or steam line. Dissolved chemicals or contaminants in the impure steam may foul superheater tubes and turbine blades, or just clog piping and traps.

Priming is characterized by large amounts of water passing out of the boiler with the steam, usually in intermittent slugs which may enter steam lines and steam turbines. Priming is more violent and spasmodic than foaming. This action is similar to the "bumping" experienced when water is boiled in an open beaker. It may occur simultaneously with foaming. High water levels in steam drums promote priming.

Since no method of internal conditioning can successfully cope with oil contamination, all oil should be removed from the boiler internal surfaces during commissioning by boil out or acid cleaning (see Section III). Oil in the feedwater should be removed externally before it can enter the boiler. Consult a water treatment expert for the best method.

8.3.3 Silica

Silica is problematic because it can be difficult to remove from water, and can form scale on heating surfaces or steam turbine components if not controlled. It is especially dangerous at pressures above 2000 psi, where it can gasify and be carried over in steam as a vapor, immune to the mechanical separation in the drum. There is no way to separate out gaseous silica. VPI recommends that the silica in the boiler water be kept as low as possible to guard the long life of the boiler components and the steam turbine. Consult a water treatment expert regarding control of silica in the feedwater.

8.3.4 Solids

Dissolved solids are in solution and cannot be removed by filtration. Suspended solids are those which are not in solution and which can be removed by filtration. Total solids represent the sum of the suspended and dissolved solids. Solids in boiler water may be magnetic or non-magnetic. TDS, or total dissolved solids, is the sum of all the impurities, including water treatment chemicals, in the boiler water. The additive effect of various boiler water constituents may produce a tendency for carryover.

Dissolved solids present in boiler water generally come from the solvent action of water in contact with the minerals of the earth or boiler components (ground water, or deposits already present in the boiler). Suspended solids are small particles of insoluble matter, mechanically introduced by the turbulent action of the water on solid objects or boiler parts.

Suspended solids may be corrosive in nature or form scale on boiler heating surfaces. For these reasons, suspended solids must be eliminated from boiler

water. Dissolved solids are typically sulfates, bicarbonates, and chlorides of calcium, magnesium, and sodium. Each of these ions may produce a specific effect in boiler feedwater. A high concentrations of dissolved solids can also cause foaming.

8.3.5 Hardness

Hardness in water is the sum of the calcium and magnesium present. Hardness is also reported as calcium hardness and magnesium hardness. In order to sub-divide the hardness in this manner the calcium hardness and total hardness are determined. The difference is assumed to be the magnesium hardness.

Hardness in water leads to scale formation. In boiler feed water conditioning, the hardness of water can cause the formation of scale on evaporative surfaces as well as excessive sludge or "mud", unless properly treated. Hardness may also cause scale and deposits in feed water heaters, feed lines, and economizers.

Total dissolved solids (TDS) can also be used as an indication of hardness. TDS is commonly measured using conductivity.

8.3.6 Calcium and Magnesium

Calcium and magnesium salts are the most common source of boiler scale. Internal chemical treatment is used to prevent deposit and scale formation from the residual hardness concentrations remaining in the feed water.

The most common source of scale is the breakdown of calcium bicarbonate to form calcium carbonate under the influence of heat. The precipitation of calcium carbonate to form boiler scale readily takes place where the boiler feed water contains any appreciable quantity of calcium bicarbonate. This action may also cause deposits to form in the feed lines, economizers, and feedwater heaters.

Calcium phosphate and calcium silicate are frequently deposited as boiler scale. Calcium silicate may be formed either from the combination of the calcium silicate ions naturally present or as a result of the use of sodium silicate as internal chemical treatment.

Magnesium salts present in boiler feed water are usually more easily prevented from forming scale than are the calcium salts. General practice is to precipitate magnesium in the boiler water in the form of magnesium hydroxide.

8.4 Other Water-Related Problems

8.4.1 Scale

The formation of scale and sludge deposits on boiler heating surfaces is the most serious problem encountered in steam generation. The object of the majority of the external treatment processes is to remove from the boiler feedwater those substances which will contribute to scale or deposit formations in the boiler.

The primary cause of scale formation is decreasing solubility levels with increasing temperature. As the operating temperature of the boiler increases, the salts become more and more insoluble. No method of external chemical treatment is effective at the highest boiler operating temperatures. As the feedwater temperature is elevated to the operating boiler water temperature and concentrations, the solubility of the scale forming salts is exceeded and they crystallize in the form of scale on the boiler heating surfaces.

Boiler scale creates a problem in boiler operation because the heat conductivity of the scale is lower than that of the steel. The presence of scale is therefore equivalent to spreading a thin film of insulation across the path of heat transfer from the high temperature gasses to the boiler water. This will reduce heat transfer and cause a loss in boiler efficiency. Stack gas temperature may increase as the boiler absorbs less heat. Eventually, scale formation can cause tubes to overheat, warp and rupture.

8.4.2 Steam Purity or Carryover

Carryover is the term applied to the continuous entrainment in the steam of a small quantity of boiler water solids. In other words, the steam issuing from the steam drum carries droplets of boiler water (mechanical carryover) or vaporized salts into the superheaters and steam turbine. The sum of the mechanical and vaporous carryover is the total carryover.

If excessive boiler water is carried over in the steam, the solids in the water will deposit in the superheater tubes, non-return valves, piping, or the steam turbine. These deposits act as insulators in superheater heating surfaces allowing the tube metal temperatures to rise. They can create imbalances of the steam turbine rotor. Encrustations of governor valves may permit over-speeding, damaging the steam turbine. Serious damage to equipment and losses to efficiency may result.

The boiler drums are designed with mechanical separation equipment, which “dries” the steam by removing water droplets. Mechanical separation is not effective in controlling volatile or vaporous materials such as gaseous silica, ammonia, carbon dioxide, and other gases. Concentration of these materials must be controlled in the boiler water, as they cannot be removed from the steam. This is most important in the case of silica which can vaporize in the steam path at pressures above 1000 psig (68.9 barg).

The most common causes of mechanical carryover are foaming or priming in the boiler, or excessive water level in the drum. These situations will allow significant amounts of water to enter the steam separators, reducing their efficiency. Priming and foaming are always undesirable and may be dangerous, and their cause should always be quickly investigated and corrected. Consult the ASME Boiler and Pressure Vessel Code, Section 7, Care of Power Boilers for causes and corrective courses of action related to internal chemical conditions.

A secondary and very preventable cause of boiler carryover is loose or worn steam separation equipment. Periodic inspection of the drum internals can prevent expensive steam turbine repairs. Vogt Power’s Aftermarket Services can provide guidelines or inspection services.

If carryover is occurring, the superheater can quickly be fouled or damaged. Warning signs of excessive carryover include an increase in pressure drop across the superheater or a failed superheater tube.

8.4.3 Hideout

Hideout is a temporary or permanent disappearance of water treatment chemicals within a steam generator. Hideout can occur in any steam generator circuit or any component within a steam cycle. It can be caused by a variation of chemical and physical phenomena. Hideout is identified by a change in water pH or conductivity. The most widely recognized hideout form is a loss of phosphate.

Phosphate treatments are used in most drum-type boilers for pH control and protection against hardness. It is, however, difficult to control in transient situations. Hideout and variations in water volume can make it difficult to control the phosphate concentration.

Not all boilers experience phosphate hideout. Whether or not it will occur will depend on the relationship between phosphate concentrations, metal temperatures,

and the availability of concentrating sites and deposits. Minimizing deposits in evaporator tubes reduces phosphate hideout.

Excessive hideout is normally corrected by chemical cleaning followed by conditioning of the cleaned surfaces with phosphate until a stable film of magnetite is reformed on the tube surfaces. Even though alkaline treatment may be difficult to control in some instances, its effectiveness in controlling contaminants is not impaired and it can be used effectively in emergencies.

8.5 Internal Treatment of Boiler Water for Natural Circulation Units

After initial treatment of the feedwater, the boiler water needs internal treatment to maintain appropriate pH, TDS levels (total dissolved solids), silica concentrations, etc., through the entire system. Common methods include conventional phosphate, coordinated phosphate, congruent phosphate, chelant, and volatile. Consult a water treatment expert for the best method to use for the actual operating conditions of the HRSG.

The American Boiler Manufacturer's Association (ABMA) and the American Society of Mechanical Engineers (ASME) have both studied the water quality requirements of boilers for different pressures and heat transfer rates. Their suggested limits are shown in Table 8.1 for the operator's convenience.

Table 8.1 Recommended Boiler Water Limits and Associated Steam Purity

DRUM TYPE BOILERS AT STEADY STATE FULL LOAD OPERATION

DRUM PRESSURE PSIG	RANGE TOTAL DISSOLVED SOLIDS (1) BOILER WATER ppm (MAX)	RANGE TOTAL ALKALINITY(2) BOILER WATER ppm	SUSPENDED SOLIDS BOILER WATER ppm (MAX)	RANGE TOTAL DISSOLVED SOLIDS (3,4) STEAM ppm (MAX EXPECTED VALUE)
0 - 300	700 - 3500	140 - 700	15	0.2 - 1.0
301 - 450	600 - 3000	120 - 600	10	0.2 -1.0
451 - 600	500 - 2500	100 - 500	8	0.2 - 1.0
601 - 750	400 - 2000	80 - 400	6	0.2 - 1.0
751 - 900	300 - 1500	60 - 300	4	0.2 - 1.0
901 - 1000	250 - 1250	50 - 250	2	0.2 - 1.0
1000 - 2000	100	Note (3)	1	0.1

NOTES: (1) Actual values within the range reflect the TDS in the feedwater.
Higher values are for high solids, lower values are for low solids in the feed water.

(2) Actual values within the range are directly proportional to the actual value of TDS of boiler water.
Higher values are for the high solids, lower values are for low solids in the boiler water.

(3) Dictated by boiler water treatment.

(4) These values are exclusive of silica.

Source -- The American Boiler Manufacturers Association

8.6 References

Betz Handbook of Industrial Water Conditioning - Ninth Edition

"Boiler Water Quality and Steam Purity Recommendations for Water Tube Boilers" - 1980 - American Boiler Manufacturers Association

"COMBUSTION - Fossil Power Systems" - Third Edition - Combustion Engineering, Inc.

EPRI Report CS-4629 "Interim Consensus Guidelines on Fossil Plant Chemistry"

"STEAM -Its generation and use." - 40th Edition -The Babcock & Wilcox Co.

The ASME Handbook on Water Technology for Thermal Systems

Note: New editions of the above references may be available.

9.0 PERFORMANCE PREDICTION

9.1 HRSG PERFORMANCE PREDICTION

The HRSG is designed to recover energy from gas turbine exhaust gas to produce steam that meets the requirements of the steam turbine. Expected performance such as steam flow, pressure, temperature (for each pressure level) are predicted for certain gas turbine operating conditions based upon specific exhaust gas flow, exhaust gas temperature, exhaust gas constituents, fuel analysis, fuel heating values, etc., provided to Vogt Power.

Since the expected performance is based on specific operating conditions, it is unlikely the plant will spend much time running under exact design conditions. Over the lifetime of the plant, the gas turbine performance will degrade, creating lower gas flows and higher gas temperatures, and affecting the HRSG output. In addition, the HRSG itself will age, and develop some gas side and water side fouling, which will affect HRSG performance. Be aware that the expected performance provided in this manual reflects a “new and clean” condition, and will not exactly match the day-to-day performance over the life of the unit.

9.2 IMPACT OF INDIVIDUAL PARAMETERS ON DESIGN AND PERFORMANCE

Unlike the input parameters for the design of a conventional boiler, the input for the HRSG is neither constant nor well defined. The GT flow and temperature cannot be regulated by the output demands of the HRSG because the GT itself is required to meet its own efficiency and electrical output. Even if the GT output is held constant, its exhaust conditions change as the ambient temperature changes and as the equipment ages. As the exact measurement of GT flow is difficult, it must be estimated based on correlations derived through tests. An HRSG whose design is based on estimated values may not perform as predicted, even if it is possible to meet the exact design conditions.

This section discusses the various parameters that affect the HRSG design, the probable errors in measuring their values, and the effect of each on the performance of the HRSG. Based on the information given, it is possible to develop an operating envelope for the HRSG.

The variables which influence the HRSG performance can be categorized as input, design and output variables. Input variables consist of:

Gas Turbine Exhaust Flow
Gas Turbine Exhaust Temperature
Gas Turbine Exhaust Constituents
Feedwater Temperature
Blowdown Rate
Steam Pressure
Burner Firing Rate

Design parameters which are either assumed or calculated include:

HRSG Geometry
Heat Transfer Coefficients
Gas Leakage
Thermal Losses

Output variables which influence the HRSG are:

Steam Temperature
Steam Quality
Variation in Operating Points

9.3 PARAMETER EFFECTS

The following paragraphs discuss the effect of each parameter on the HRSG performance, treating each parameter separately. The effect of changes in several factors taken in combination may not be completely predictable.

9.3.1 GAS TURBINE EXHAUST FLOW

In the design phase, gas turbine exhaust flows provided to VPI will generally include the base load ISO condition and corrected flows for the site conditions at base load. However, since an accurate measurement of GT exhaust flow is very difficult, a best estimate is obtained based on air and fuel measurement. In a typical gas turbine, the velocity may vary from 0% to about 300% of the average velocity across the GT outlet cross section. An HRSG designed for the estimated gas flow may not perform as predicted even if the design conditions are duplicated because the velocity distribution may lead to a different flow distribution through the tubes. Figure 9.6.1 shows the effect of changes in the gas flow rate on the steam flow and steam

temperature. The expected percent change in steam flow is equal to the percent change in gas flow.

The temperature of the superheated steam changes by about the same number of degrees Fahrenheit as the percentage change in the gas flow but in the opposite direction. A decrease in GT exhaust flow will lead to an increase in the steam superheat temperature.

9.3.2 GAS TURBINE EXHAUST TEMPERATURE

GT Exhaust Temperature, like exhaust flow, is difficult to measure, and the values given for the HRSG design will be best estimates only. Exhaust temperatures will vary by about 50℉-100℉ (28℃-56 ℃) across the GT outlet duct cross section. An HRSG may not perform as designed because of maldistribution of GT temperature. As Figure 9.6.2 shows, both the steam flow and steam temperature change in the same direction as the change in GT exhaust temperature. An increase of about 5℉ (3℃) in GT exhaust temperature increases the steam flow by 1% and increases steam temperature by about 2℉ (1℃).

9.3.3 COMBUSTION TURBINE EXHAUST CONSTITUENTS

Gas turbine exhaust constituents, particularly the moisture content, are an important factor in the design and performance of an HRSG. Higher moisture content increases the gas enthalpy, which results in more heat available for the same temperature exhaust gas. The net result is more heat transfer for the same surface. Figure 9.6.3 shows the steam output variations based on the change in gas moisture content. For each 1% increase in moisture content, the steam flow increases by about 0.75% and the steam temperature decreases by about one-half a degree.

9.3.4 FEEDWATER TEMPERATURE

Feedwater temperature changes have a very minor influence on the steam output. As Figure 9.6.4 shows, a 10℉ change in feedwater temperature changes the steam flow by about 0.1% and the steam temperature by about 0.1℉. There are two primary reasons for the low impact:

Feedwater heating is a small portion of the total HRSG duty.

The change in feedwater temperature changes the economizer section duty and the log mean temperature difference (LMTD) but in different directions,

which compensates the heat transfer surface area requirements to certain extent. For example, a 10°F (5°C) decrease in feed water temperature increases the duty by about 4%, but increases the LMTD by about 3%. The net result is about 1% deficiency in the economizer surface. Since the economizer surface is a small part of the total surface, the total surface deficiency is much less and the effect on steam output is very minimal , as shown on Figure 9.6.4.

9.3.5 BLOWDOWN

Generally, blowdown is specified as a percentage of total feedwater flow. More blowdown means more loss of treated water and more loss of heat, which affects steam generation. However, the effect on steam flow is not very significant. As Figure 9.6.5 shows, doubling the blowdown from 4% to 8% changes the steam flow by about 0.8% (from 0.9% to 1.7%). Steam temperature is decreased 0.5°F.

9.3.6 HEAT TRANSFER COEFFICIENT

An exact calculation of the heat transfer coefficient is very difficult because of the large number of variables involved. Calculations are considered acceptable if they can predict the heat transfer coefficient within ±10% to 15%. Because of this margin, it is possible to have a discrepancy of about 10% to 15% between the actual and required surface areas of an HRSG. Designing the HRSG with more surface to cover for this discrepancy may not solve the problem; in a multi-section HRSG providing more surface in one section generally results in less heat available for the next section (increasing HP steam production decreases IP steam production). It is also possible that a correlation may predict good values for the heat transfer coefficient with design conditions but may give lesser or higher values at off design points. Figure 9.6.6 shows the effect of heat transfer coefficient on the steam flow. A 10% change in predicting the coefficient results in about 0.75% change in steam supply and about 10°F change in steam tempera ture. However, unlike the effect of other variables, which result in higher steam temperature for lower steam flow, the decrease in heat transfer coefficient produces both lower steam flow and lower steam temperature.

9.3.7 LEAKAGE

Due to pressure drop through the HRSG, the exhaust gas coming out of the gas turbine is under pressure and there is a possibility that it may leak out of the HRSG or expansion joints instead of going through the heat transfer

surfaces. Leakage generally occurs around inspection doors and other openings, as the HRSG design uses all-welded construction. This factor needs to be taken into account in the design phase only, as pressure variation from design conditions to the site conditions is very insignificant. The effect of leakage, as shown in Figure 9.6.7, is the same as that of a change in GT exhaust flow.

9.3.8 RADIATION AND OTHER LOSSES

All boilers lose heat to the atmosphere by heat transfer from the casing surface. HRSGs generally lose more heat than conventional boilers because they have more casing surface area compared to the amount of heating surface, particularly in the ducts. As in the case of other design variables, the heat loss should be taken into account while designing the HRSG. However, since the gas temperature at off-design points may be different than at the base load this may result in different heat loss. The effect of the loss as shown in Figure 9.6.8 is to decrease the steam output.

9.3.9 STEAM PRESSURE

The steam pressure is more significant than other input variables because in the operating phase the steam flow and temperature will be determined by the GT inputs and the effective surface available. Generally, the steam pressure will not vary if the steam is going to a process steam header. However, the pressure can vary significantly if the steam is used for a steam turbine with a sliding pressure requirement, or for a multiple processes with variable steam requirements. Steam flow and temperature changes due to outlet pressure variation are shown in Figure 9.6.9.

9.4 SUMMATION

The preceding paragraphs indicate that the most critical variables which influence the HRSG performance and which are beyond the control of the HRSG designer are GT Exhaust gas flow, GT exhaust gas temperature and the moisture content of the gases.

In general, the steam flow at a given GT load varies from +6.0% to -3.0% due to the tolerances in the input variables. The error margin increases with the decrease in GT load but remains constant with the change in the ambient conditions.

The steam temperature is affected considerably by changes in the GT load or ambient conditions. However, the effect of tolerances in the input variables is not very pronounced and it is generally of the order of +10°F (5℃) to -10℉ (5℃). Figure 9.6.10

and Figure 9.6.11 show the cumulative effects of the error margins in the input variables for various ambient conditions and loads.

9.5 RECOMMENDATIONS AND CONCLUSIONS

An HRSG is designed based on the input variables as supplied by the GT manufacturer. Each of these variables changes with ambient conditions, GT load, steam turbine performance and equipment age. If steam output changes considerably from the predicted value, the HRSG and associated equipment should be examined to find a cause. It may be possible to make repairs or modifications to restore the plant to the expected operating range. The difficulty lies in deciding how much of the output deficiency can be attributed to input variables, and how much must be attributed to normal aging and degradation of the HRSG, GT, ST, and other plant equipment.

VPI can provide a “black box” program to aid the plant staff in determining expected performance at different operating conditions, based upon the gas turbine and steam turbine expected performance. This can be especially useful when major changes to other plant equipment are planned. Please contact VPI’s Aftermarket Services department for details.

9.6 FIGURES

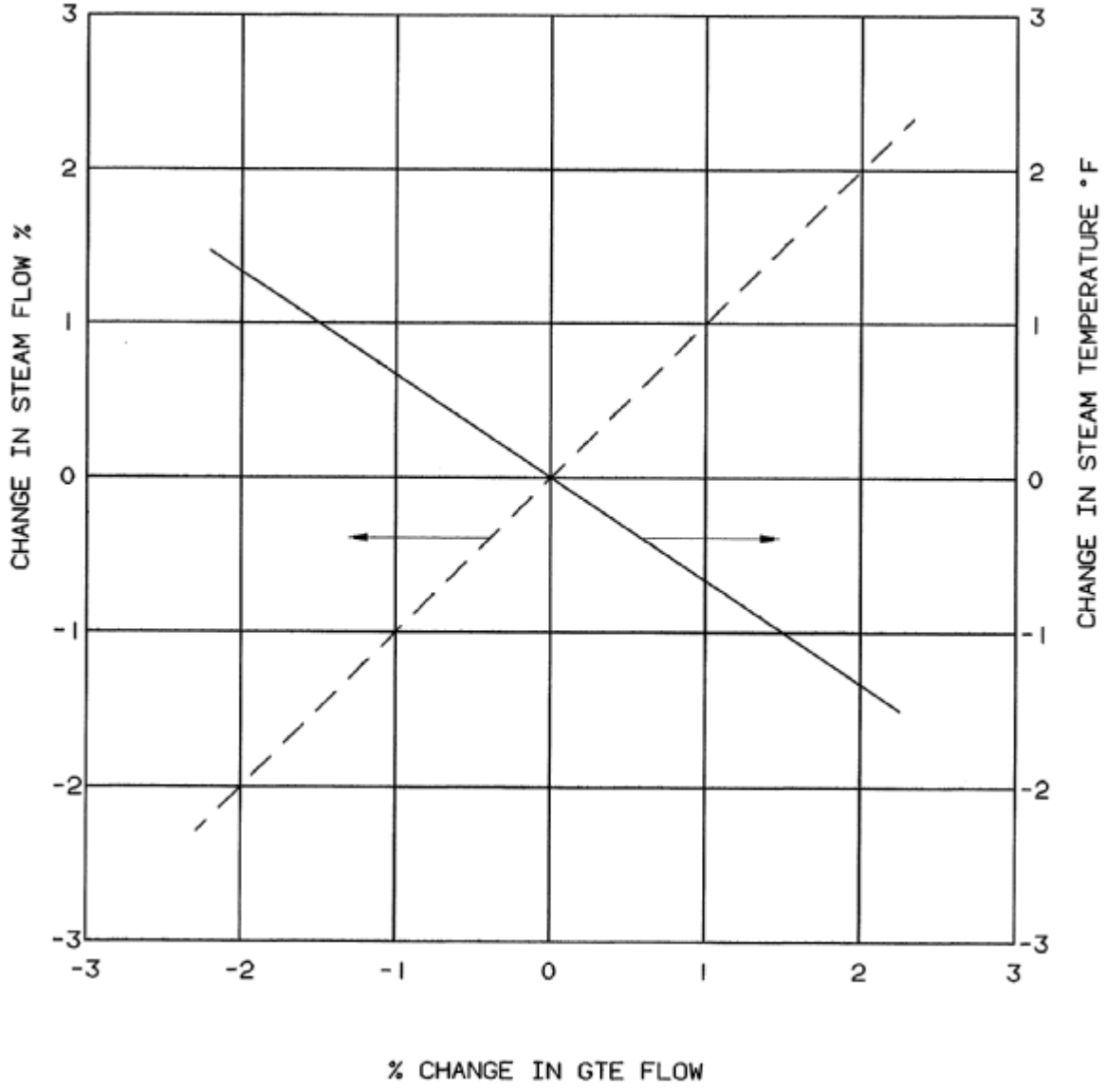

Figure 9.6.1

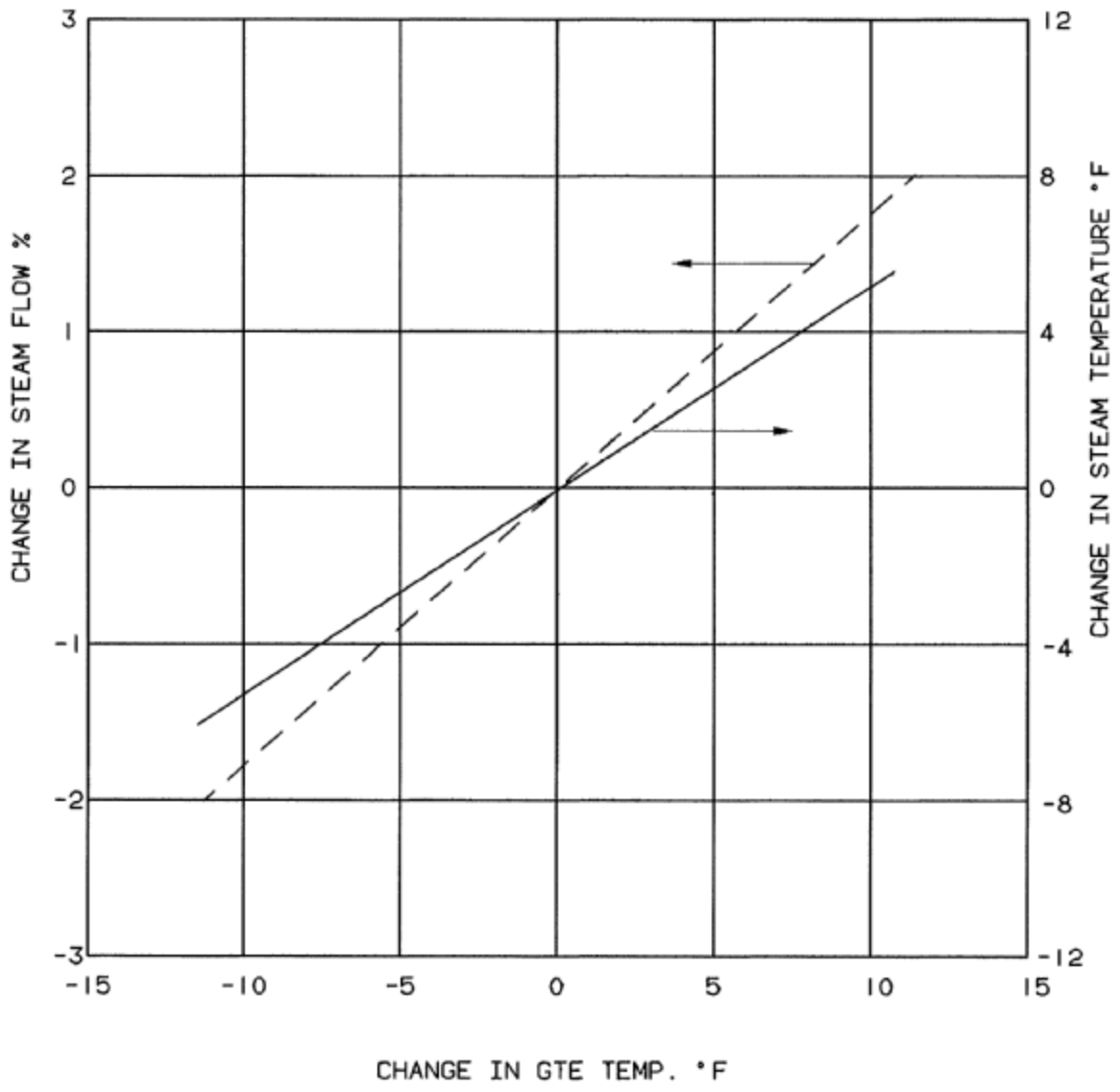
3
2
1
0
-1
-2
-3
CHANGE IN STEAM FLOW %
12
8
4
0
-4
-8
-12
CHANGE IN STEAM TEMPERATURE °F
-15
-10
-5
0
5
10
15
CHANGE IN GTE TEMP. °F

Figure 9.6.2

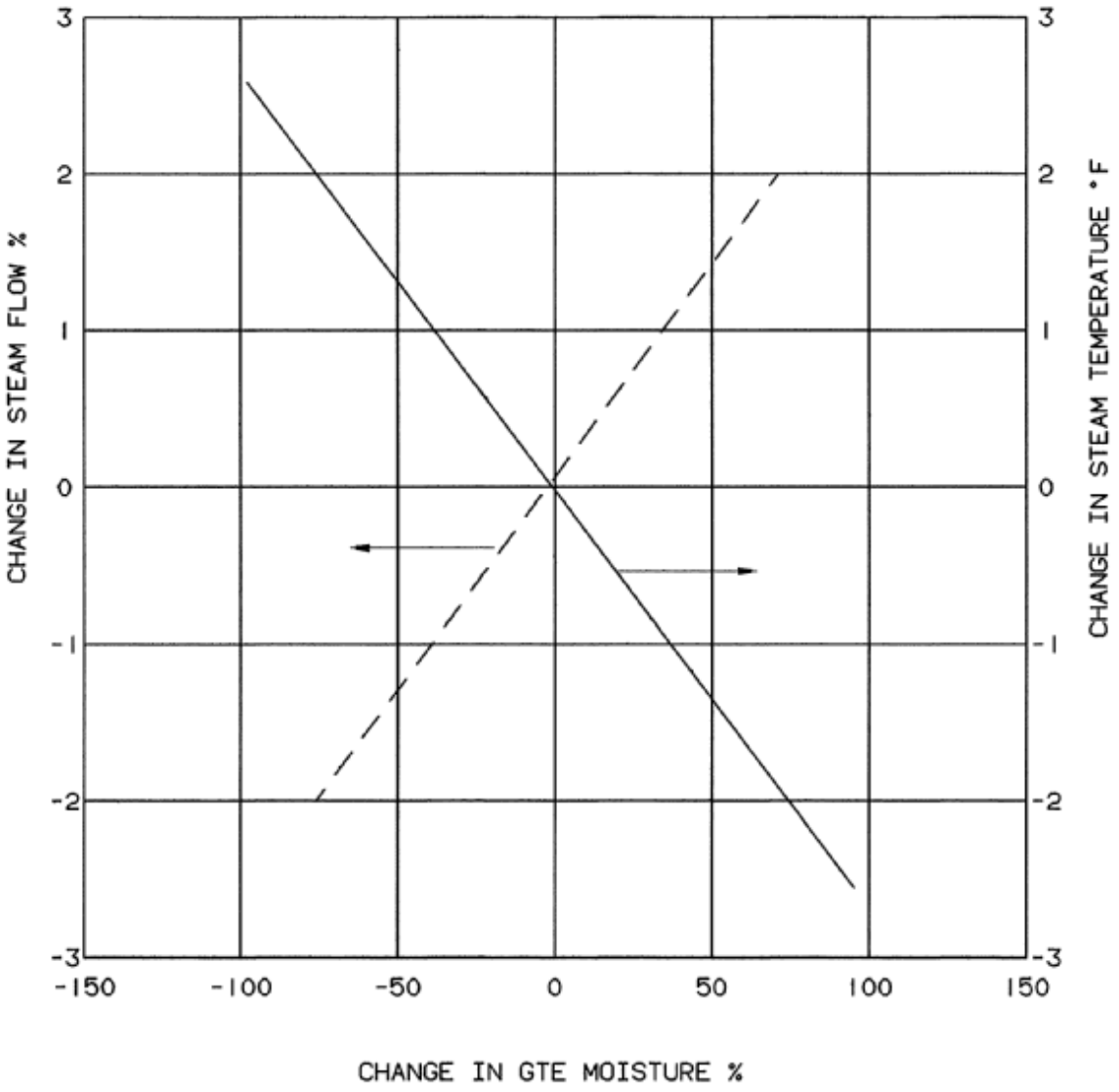
3
2
1
0
-1
-2
-3
CHANGE IN STEAM FLOW %
CHANGE IN STEAM TEMPERATURE °F
-150
-100
-50
0
50
100
150
CHANGE IN GTE MOISTURE %

Figure 9.6.3

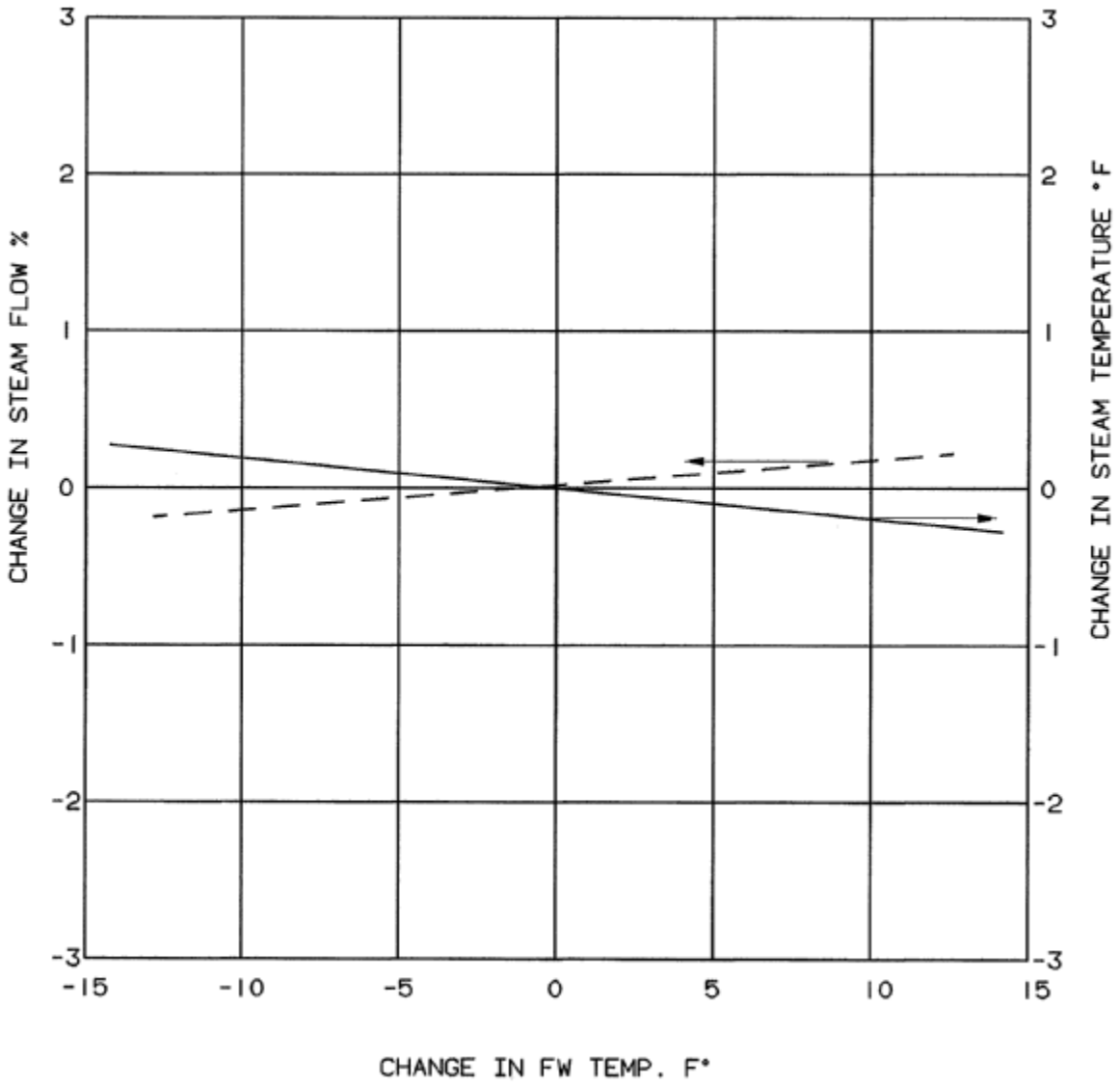
3
2
1
0
-1
-2
-3
CHANGE IN STEAM FLOW %
CHANGE IN STEAM TEMPERATURE °F
-15
-10
-5
0
5
10
15
CHANGE IN FW TEMP. F°

Figure 9.6.4

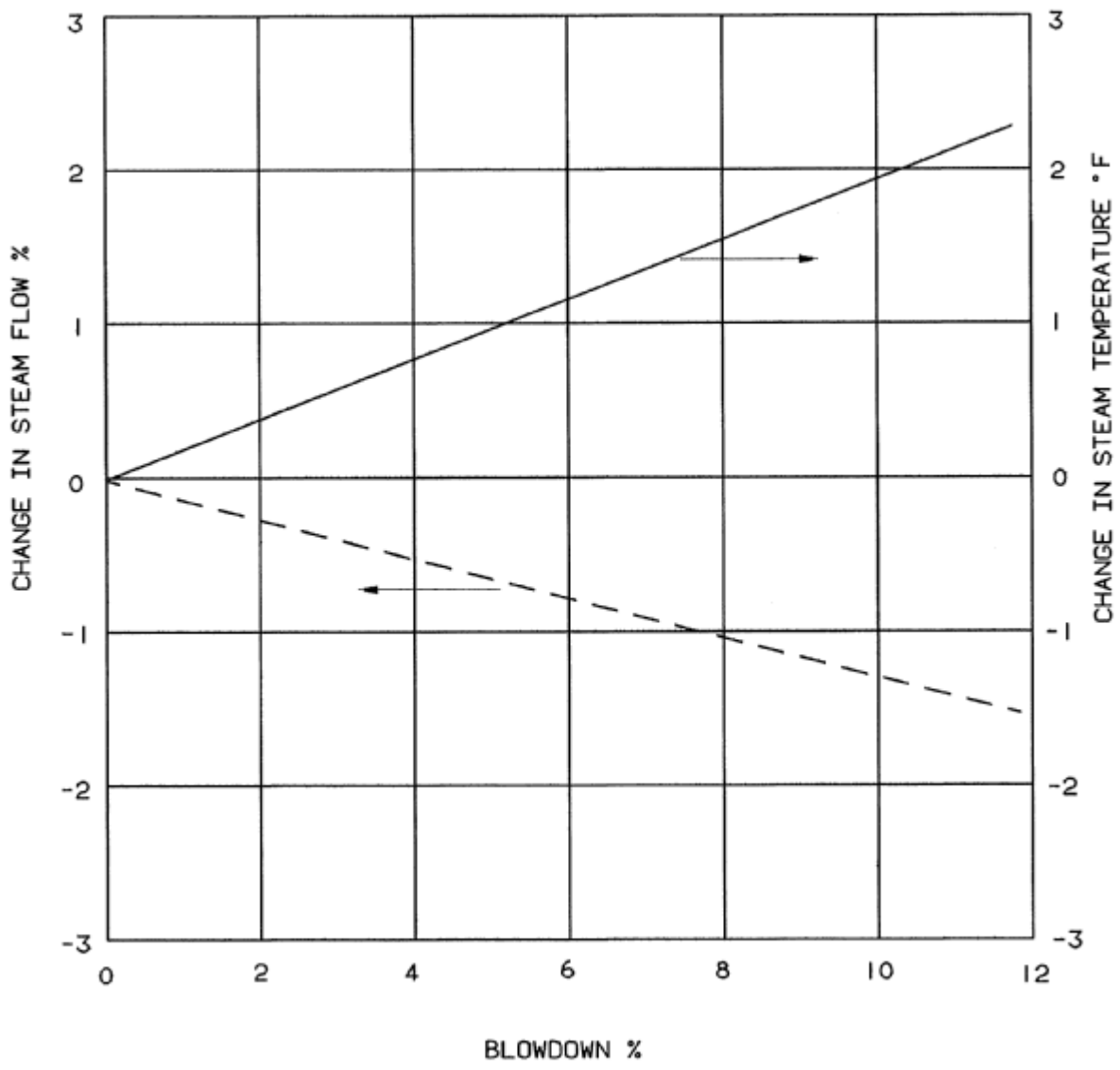
3
2
1
0
-1
-2
-3
CHANGE IN STEAM FLOW %
CHANGE IN STEAM TEMPERATURE °F
0
2
4
6
8
10
12
BLOWDOWN %

Figure 9.6.5

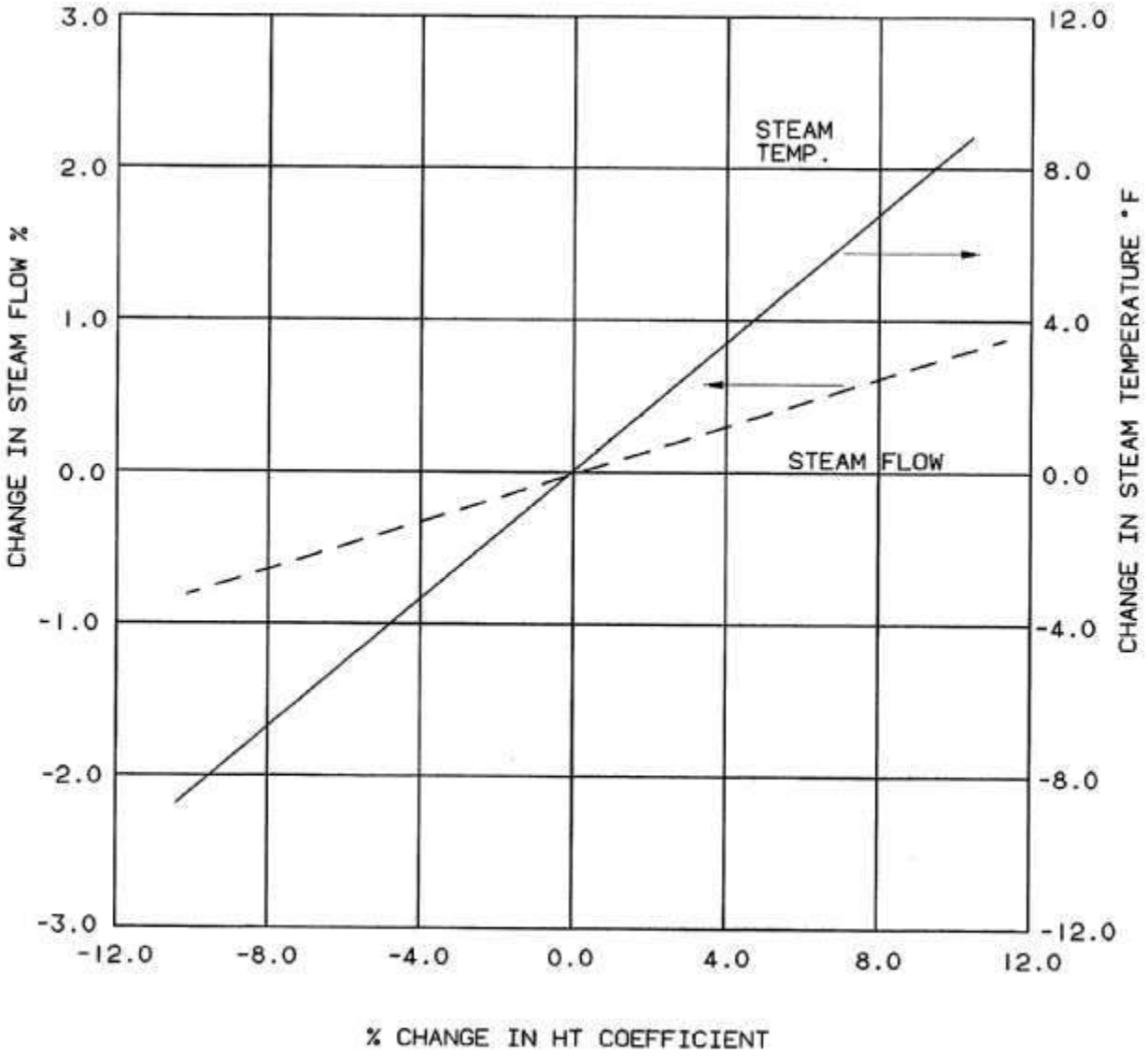
3.0
2.0
1.0
0.0
-1.0
-2.0
-3.0
CHANGE IN STEAM FLOW %
12.0
8.0
4.0
0.0
-4.0
-8.0
-12.0
CHANGE IN STEAM TEMPERATURE °F
STEAM TEMP.
STEAM FLOW
-12.0
-8.0
-4.0
0.0
4.0
8.0
12.0
% CHANGE IN HT COEFFICIENT

Figure 9.6.6

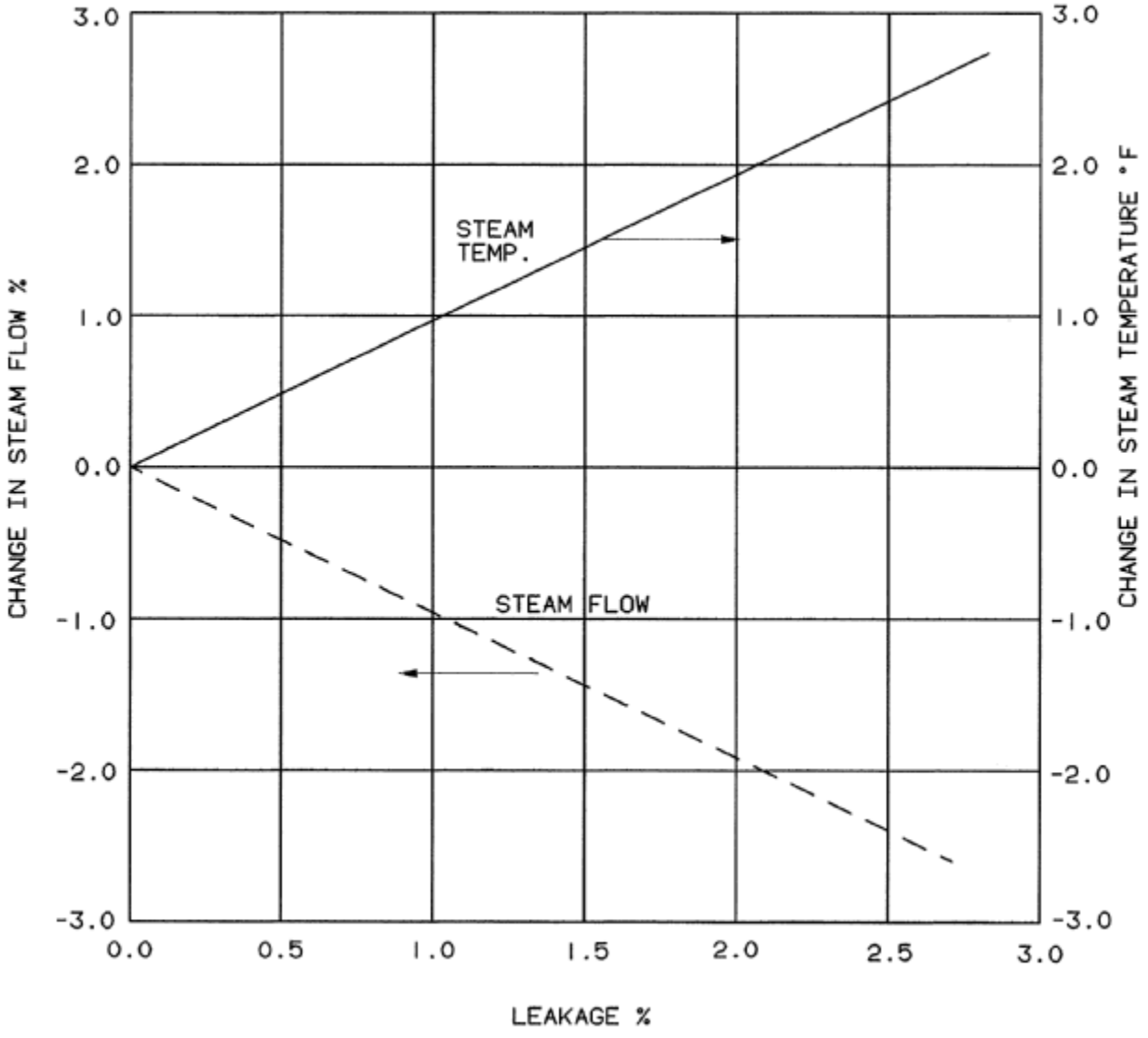
3.0
2.0
1.0
0.0
-1.0
-2.0
-3.0
CHANGE IN STEAM FLOW %
CHANGE IN STEAM TEMPERATURE °F
STEAM TEMP.
STEAM FLOW
0.0
0.5
1.0
1.5
2.0
2.5
3.0
LEAKAGE %

Figure 9.6.7

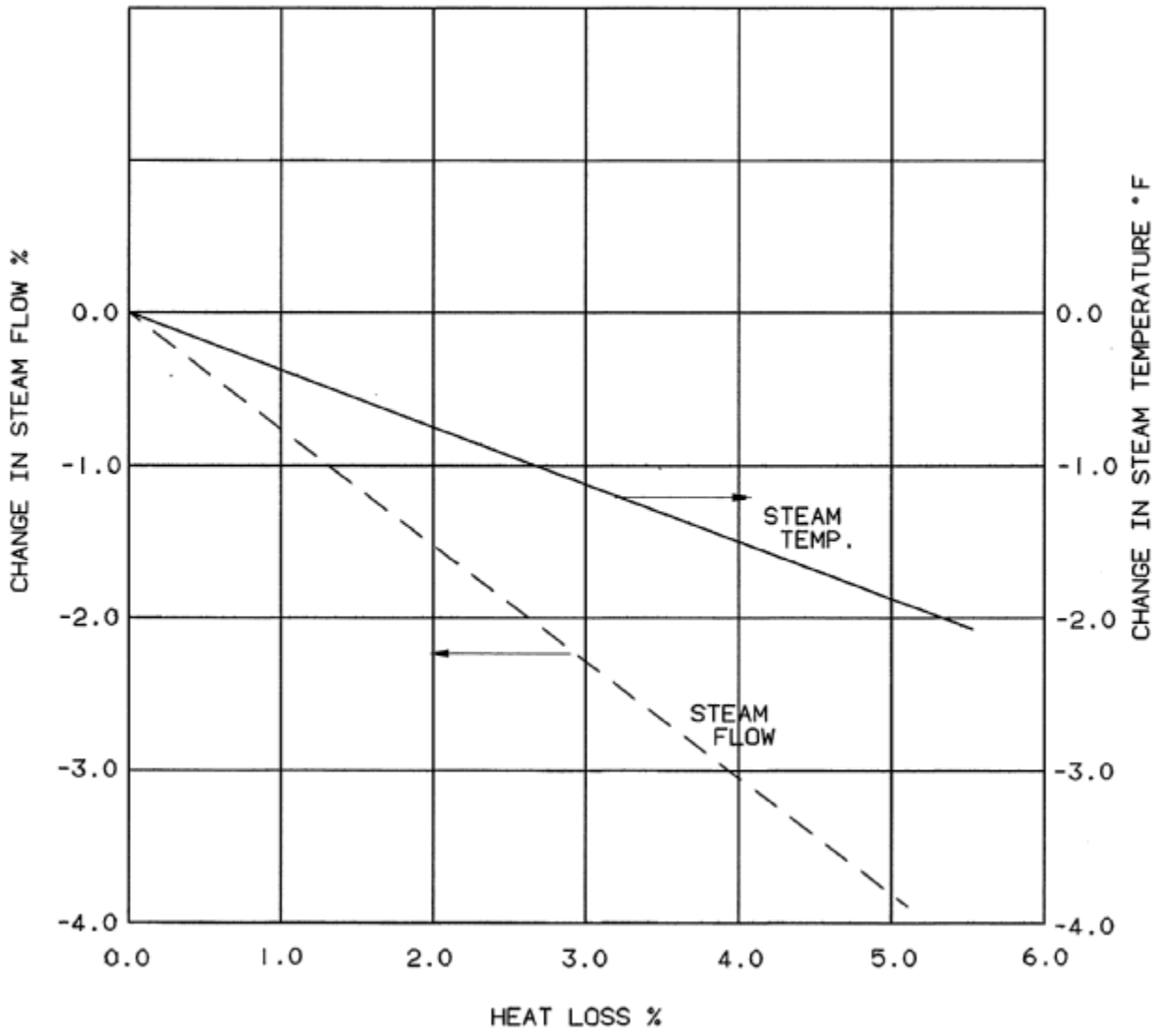
CHANGE IN STEAM FLOW %
0.0
-1.0
-2.0
-3.0
-4.0
CHANGE IN STEAM TEMPERATURE °F
0.0
-1.0
-2.0
-3.0
-4.0
STEAM TEMP.
STEAM FLOW
0.0
1.0
2.0
3.0
4.0
5.0
6.0
HEAT LOSS %

Figure 9.6.8

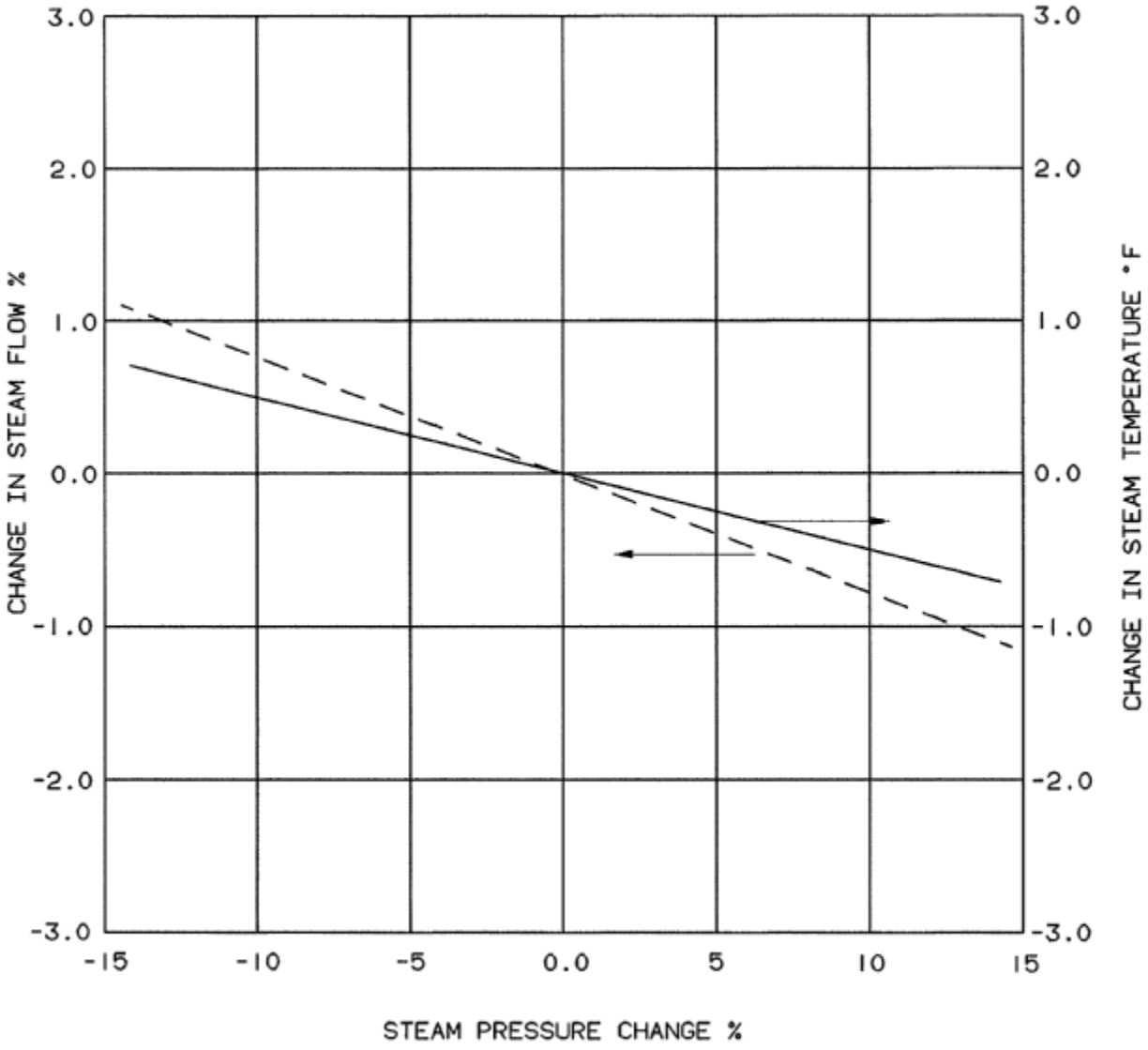
3.0
2.0
1.0
0.0
-1.0
-2.0
-3.0
CHANGE IN STEAM FLOW %
CHANGE IN STEAM TEMPERATURE °F
-15
-10
-5
0.0
5
10
15
STEAM PRESSURE CHANGE %

Figure 9.6.9

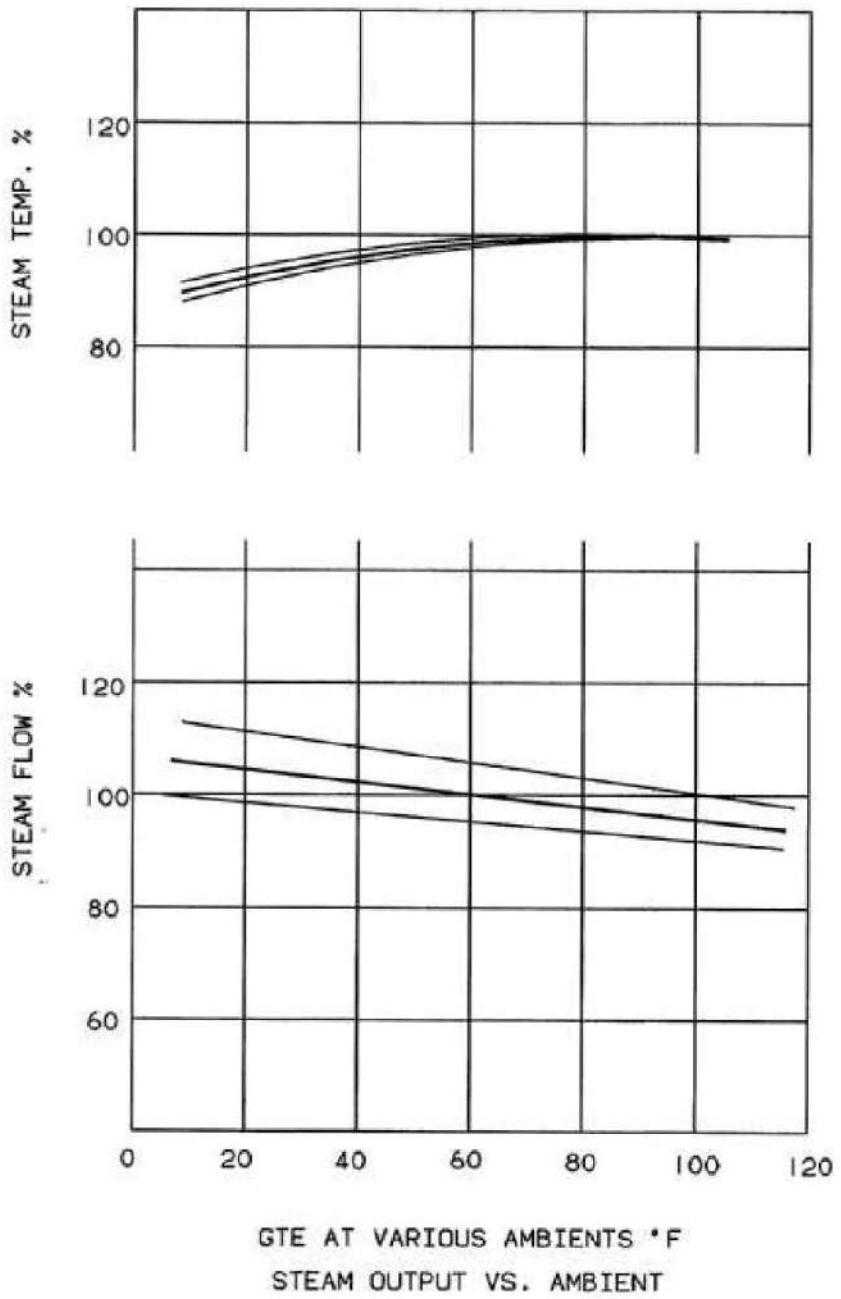
STEAM TEMP. %
120
100
80
STEAM FLOW %
120
100
80
60
0
20
40
60
80
100
120
GTE AT VARIOUS AMBIENTS °F
STEAM OUTPUT VS. AMBIENT

Figure 9.6.10

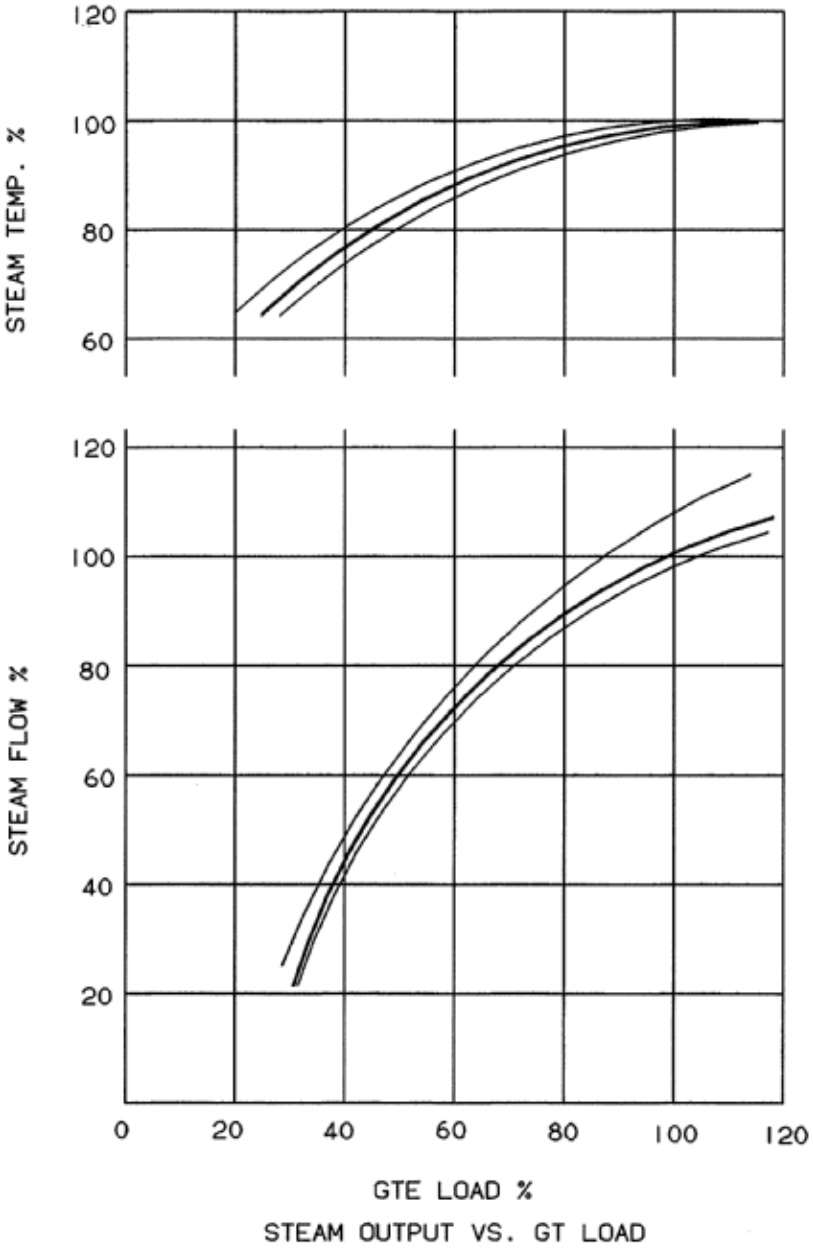
120
100
80
60
STEAM TEMP. %
120
100
80
60
40
20
STEAM FLOW %
0
20
40
60
80
100
120
GTE LOAD %
STEAM OUTPUT VS. GT LOAD

Figure 9.6.11

1.0 SAFETY PRECAUTIONS

Safety is everyone's business. This section's purpose is to inform the operators of the potential risks associated with the operation and maintenance of the Vogt Power HRSG.

NOTE: This section contains suggestions for safe operation and maintenance of the Vogt Power HRSG. This section shall not be considered as a safety standard or procedure. Minimum requirements are presented for the benefit of the reader, but this section is not intended to be all inclusive.

Proper installation, operation, and maintenance are essential for safe and reliable HRSG operation. The performance of the required tasks for HRSG operation and maintenance will require personnel to be in the proximity of fluids and materials at high temperatures and pressures. Precautions taken should include, but not be limited to, hearing protection, eye protection, protective clothing (i.e., gloves, hard hats, long sleeve shirts) as required for the task being performed. Due to the various circumstances and conditions in which plant personnel may be working and the consequences of each, Vogt Power cannot possibly evaluate all conditions that may injure personnel or equipment. Nevertheless, the following safety precautions are offered for plant personnel information only.

It is the purchaser's responsibility to ensure that the unit has been inspected and approved by the appropriate and applicable regulating authorities, including state regulators and his insurance company.

1.1 HRSG ACCESS

When entering ductwork or boiler casing through access doors for routine maintenance or inspections, ensure that the environment has been checked for man-safe conditions. Verify temperatures are not excessive, and that environmental gases are not be tainted with exhaust fumes or potentially hazardous material. When entering the cavity, look around to be sure there are no loose liner panels or other boiler components overhead. <u>Never enter the boiler without complying with OSHA'S confined space entry requirements.</u>

Extended outages for major HRSG upgrades or maintenance require a lock out of the GT from operation. <u>Under no circumstances should the gas turbine have any chance of operation when personnel are inside the HRSG for inspection or maintenance.</u>

After safe entry has been gained, ensure adequate lighting and ventilation have been installed to perform the task.

When entering steam drums, operators should mechanically ensure that drum access doors cannot be inadvertently closed, trapping personnel inside.

In inclement weather, operators should be aware of slick grating or icicles on the platforms external to the HRSG enclosure.

Operators should be alert for grating not properly fastened down. Loose grating can result in tripping hazards.

When the HRSG is in operation, never touch an exposed piece of process pipe or tubing without first testing for temperature.

Do not touch the HRSG casing while in operation without first testing with an instrument. Note that discolored areas on casing are indicative of hot spots. These can indicate insulation system failure.

1.2 VALVES AND INSTRUMENTS

Never repack or perform maintenance on a valve while it is under pressure unless a special procedure exists (i.e., setting of safety valves) and qualified personnel are performing the task.

Always be sure that all safety relief valves are in working order prior to start-up.

CAUTION: HRSG OPERATION WITH ANY SAFETY RELIEF VALVE IN NON-OPERATIONAL CONDITION COULD CAUSE SERIOUS INJURY AND EXCESSIVE DAMAGE TO HRSG PRESSURE PARTS.

When replacing instrumentation, always isolate the instrument with the root valves and remove pressure with instrument vent or blow off line. Do not try to repair an instrument while it is under pressure**.**

1.3 INSULATION

Repair damaged insulation and lagging as soon as possible, particularly in areas where personnel could be injured (i.e., near aisles, areas easily reached from platforms, ladders, stairs or grade, etc.). The casing insulation specified by Vogt Power is non-asbestos bearing mineral wool or ceramic fiber.

1.4 INSTRUMENT LINE BLOWNDOWN

When blowing down an instrument sensing line, hot water and steam will be discharged. Instrument sensing lines (normally not insulated) will be heated to high temperatures during blowdown. The area should be safe-guarded until lines have cooled. Note that excessive blowdown of transmitter lines will expose the transmitters to excess temperature and cause premature failure.

CAUTION: OPERATING GAGE GLASS VALVES INCORRECTLY CAN CAUSE DAMAGE TO GLASS PORTS AND RESULT IN SERIOUS INJURY.

Follow guidelines as described in Vendor manuals found in the Vogt Power HRSG Operantion and Maintenance Manual Volume IV.

When examining high pressure steam Lines for leaks, extreme care should be used, particularly if the leak is heard but not seen. Use a probe such as a 2 x 4 or broom handle when searching for leaks.

2.0 SUGGESTED OPERATIONAL PROCEDURE

2.1 As soon as possible during start up, place each feedwater regulator on automatic. Check the drum water level frequently. Never depend entirely upon automatic alarms or feedwater regulators to maintain evaporator drum water levels within required range. If drum water levels increased gradually, the boiler feedwater control valve(s) may be leaking. The most important rule in the safe operation of a natural circulation evaporator is to keep the water as near the design level as conditions will permit.

2.2 Normal practice is for the incoming "HRSG" operator to check the water column drains by blowing down the drains upon entering the boiler operations area in the beginning of each shift. More frequent blowdown may be necessary when trouble is experienced with boiler compounds, foaming, priming, and other feedwater trouble. Make provisions to "bypass" any low water sensors on gauge glass columns which may be tripped while blowing down the gauge glasses and water columns. Experience may indicate that blowing down less frequently is desirable. This should be worked out between the boiler operator, feedwater consultant, and the insurance inspector.

2.3 The water columns should be well-lit and the glasses must be kept clean. Do not allow steam or water to leak from the water column or gauge glass connections, as this will cause the gauge glasses to show a false level.

2.4 In normal operation, each safety valve should be checked periodically to insure that it is open and free, usually by raising the steam pressure until the safety valve pops, or by raising the valve disc, gate, or plug from its seat by hand (when pressure is greater than 75% of set pressure) on boilers operating below 600 psig (41.4 bar).

For pressures higher than 600 psig (41.4 bar), “lift assist" devices are available to check the popping or opening pressure of the safety valve without raising the boiler above the normal operating pressure. This hydraulic lift assist device can ensure that the set point is accurate but cannot check the valve for full lift nor does it provide data concerning blowdown; therefore, valve performance cannot be verified. Lift assist devices can only be used on valve designs that permit their use. The valve manufacturer should be contacted for the tools and technician to check the operating pressure and assist in restoring the valves to "safety valve standards" before the boiler is commissioned (See TAB II, Section 7, Paragraph 7.13).

2.5 Perform all boiler water and boiler feedwater tests as directed by your feedwater consultant. Adjust operations accordingly.

2.6 Operate the continuous blowdown valves as indicated by the boiler water tests to maintain the concentration of boiler water solids shall remain within the permissible limits (See Section I, Tab 8).

2.7 Blow the boiler down through the bottom (intermittent) blowdown valves once each eight (8) hour shift. In blowing down, follow the instructions on the valve. For valve sets, the valve next to the unit (root valve) should be opened first and closed last. Blowdown should result in a maximum water level decrease of 1/2" (12.5mm). Both valves should be closed tightly. If a blowdown valve leaks, repair it as soon as practical. Leaking valves can be detected by checking the discharge line temperature before blowing down.

2.8 The efficiency and capacity of a boiler depends upon maintaining its cleanliness both internally (water side) and externally. The cleanliness of the water side should follow the dictates of your water consultant, which should not vary much from the "Suggested Feedwater and Boiler Water Guidelines" as given in Section I Tab 8.0.

2.9 When the unit is opened for periodic inspection and general repairs, internal surfaces should be carefully examined. If any accumulations are noted, they should be removed and the reason for the accumulation determined, and if possible, corrected.

2.10 Should small casing leaks occur, locate their source, and repair as soon as possible. Some leaks can be repaired while the unit is on line. Contact Vogt Power's Field Service Department for assistance.

2.11 If a serious leak occurs in any pressure part, shut down the unit immediately. Have the failure examined by an authorized inspector and repaired before returning to service.

2.12 Do not allow water leakage to occur at manways and handholes. If a leak is discovered, replace the gasket and refinish the seating surfaces as soon as possible.

Repairs should never be made to any pressure part of the boiler piping, or appurtenances while under pressure (except in tightening valve packing). Steam leaks in the high pressure boiler system can cause serious injury.

2.13. A frequent check of the deaerator operation should be made to determine if oxygen content of the water being supplied to the system is at 7 ppb or less. If O2 content is higher, corrective action must be taken.

3.0 REMOVAL FROM SERVICE, LAY-UP, AND LONG TERM STORAGE

This section provides general recommendations and is not intended to be an operating instruction. Internal protection is required if the steam generator is to be out of service for more than 24 hours.

For any shut down period, the base of the stack should be cleaned of all debris and the stack drain line valve opened. If moisture is allowed to remain within the "gas side envelope," exterior surfaces of the pressure parts will rust. If this is allowed to continue for enough time, pressure part failure will occur.

A wide variety of boiler shutdown / lay-up procedures are in use with combined cycle plants.

3.1 PLANNING THE SHUTDOWN / LAY-UP

When it is time to remove an HRSG from service and place it in storage, a decision must be made regarding:

- How long it is to be stored?
- What service is expected to be available during storage, such as steam, nitrogen (N_2), and treated water?
- Will there be a danger of freezing?
- Will operators be around the unit to check an operation of SRV's, traps, and sump pumps?

Decide if the boiler is to be removed from service for a short period (hours) or an extended period (days or weeks) of time.

3.2 HRSG SHUTDOWN

Reference Section I, Tab 5 for shut down procedures.

The following general considerations should be observed when shutting down the unit:

- Do not feed cold water into a hot boiler. This practice can result in failure of metal parts due to thermal stress.

- Do not let the boiler(s) stand partially filled with water for several days. Oxygen (O_2) corrosion will be the end result, usually in the form of pitting.
- Take the boilers out of service by standard shutdown methods to repair pressure parts, when possible. Emergency shutdowns should be avoided, as they result in high thermal stresses that will reduce the operational life of the boiler.

- Make every effort to keep oil out of the boilers. Oil contamination will cause foaming on the drum water surface, making it impossible to accurately measure drum water level. If oil does enter the water side accidentally, consult your water consultant for corrective measures.

- Clean the water side of the HRSG as required by the water advisor or inspector before returning to operation. Be sure that the water advisor has access to drawings of the HRSG and these instructions.

- The superheater(s) will become condenser(s) as the boiler(s) cool. Each superheater module will fill with condensate and this will require the addition of feedwater to the boiler to supply the condensate. This is normal. When restart time comes, you may drain the condensed water into a feedwater storage tank as it is good water.

3.3 WET LAY-UP - NITROGEN METHOD

When HRSG units are used in cyclic operation, long time storage methods cannot be used. In this application, the following should be considered.

3.3.1 Stored Energy

The large mass of steel and water inside the HRSG means that there is a large quantity of stored energy available in the HRSG boiler after shutdown. By minimizing the draft through the HRSG by use of an outlet damper, this stored energy may keep the unit warm for 24 hours or more.

Pressure in the HRSG can drop rapidly if the stack and duct are opened to allow cool air to circulate through the gas side of the boiler. If the HRSG is bottled up so that outside air cannot circulate, it will stay warm for a longer period. However, the boiler will not remain static while bottled-up.

3.3.2 Pressure Equalization

If the HRSG is bottled up so that outside air cannot circulate, the entire HRSG will try to equalize in temperature as higher temperature sections transfer heat to lower temperature systems.

For example, if the low pressure boiler has been operating at say 5 psig (.34 bar), the temperature will be about 225℉ (107 °C). The average temperature of the HP economizer may be about 315℉ (157°C) and the high pressure boiler may be approximately 550℉(287 °C). If the unit is "bottled-up", heat would transfer from section to section until temperatures equalized at about 325 psig (22.4 bar) or 425℉(218 °C). This will vary due to how fast the stack is capped and the ambient temperature. These pressures will over pressure the LP system and set off the LP boiler safety valve.

Operation by the operators will be required to keep the LP (and possibly IP) safety valves from popping during hot shutdown.

3.3.3 Stratification

In addition to temperature and pressure equalization within the multi-pressure unit, as soon as natural circulation ceases the system will stratify (see Section I, Tab 2 for a discussion of natural circulation). Without circulation, the hottest boiler water will move to the top of the tubes and drums while cooler water will gravitate to the lower headers and tubes. This is natural and should be of no concern unless the ambient temperature is below freezing and the stack is not capped.

3.3.4 Field Testing

The best plan is to try a set of conditions and record all data affecting the shutdown. If after the "off period" the HRSG still has positive pressure, a re-start can be made by draining the superheater and adjusting the water level in the drums.

3.3.5 Re-Start

With the water levels adjusted and the condensate drained from the superheater(s), re-start the CT. Quickly open each blowdown valve for a two (2) second blowdown and bring the unit up on automatic control. Monitor water levels and flow during the re-start.

3.4 WET LAY-UP – CHEMICAL METHOD

Under the wet lay-up method, the boiler is held full of water, which is treated to render it non-corrosive. At least thirty (30) minutes before the boiler comes off line, the appropriate chemicals should be added in order to properly distribute them throughout the system prior to shut down. Due to the natural circulation design of Vogt Power HRSGs, it is not possible to circulate water through the tubes during standby periods.

Consult a qualified water treatment professional for the appropriate chemicals and concentrations.

In order to keep the internal boiler services properly protected, follow these guidelines:

3.4.1 Provide an expansion drum or tank above the top of the steam drum and fill unit to that level.

3.4.2 On units with superheaters, a nitrogen (N_2) blanket at approximately 5 psig (.34 bar) can be used on top of normal water level to prevent oxygen pitting.

3.4.3 To prevent corrosion, all water columns and gauge glass valves should be open as required for normal service and all drain valves should be closed.

Should an idle boiler be subject to freezing temperatures, the foregoing, will not apply. In such cases, the unit must be completely drained.

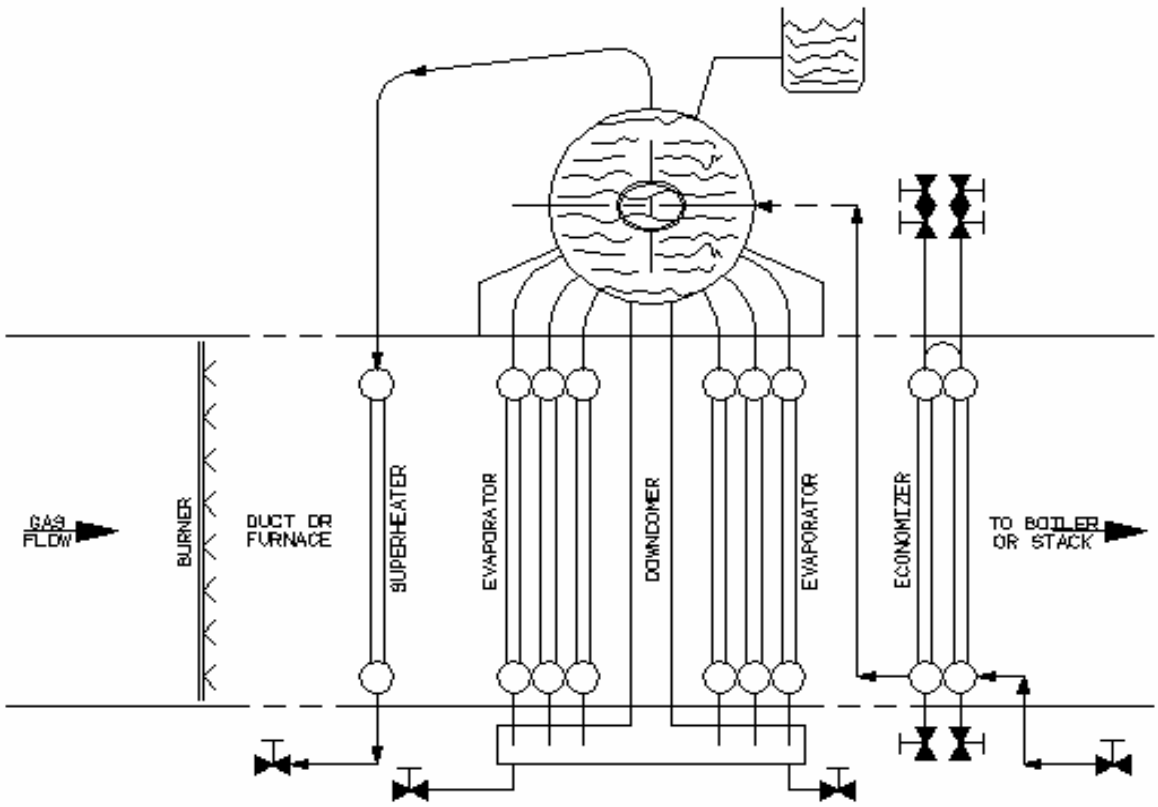

TYPICAL BOILER LAYOUT

3.5 HOT-DRY STEAM LAY-UP

Under the hot-dry method, the boiler and internal liner are kept warm by admitting live steam of available pressure into the steam drum. The required time to put the unit back into operation is kept to a reasonable minimum. The following steps are required under this method:

3.5.1 Drain all water from the unit. This includes the HP, IP, and LP economizer.

3.5.2 Install a steam trap so as to drain condensate at all superheater, evaporator, and economizer drain connections, or cycle the drains periodically. Automatic superheater drains may be used if provided.

3.5.3 Connect the necessary steam supply piping and condensate return. This is "good" water and should be recycled.

3.5.4 Admit the available steam into the steam drum. Steam pressure as low as 15 psig (1 bar) may be used.

3.5.5 Block air flow at all stacks and close all access doors to reduce steam consumption.

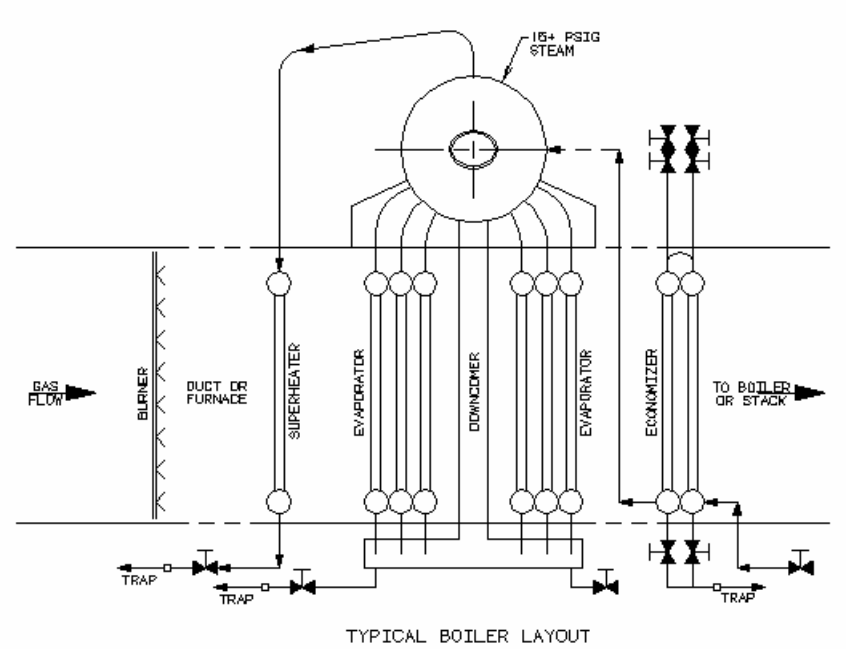

TYPICAL BOILER LAYOUT

3.6 DRY LAY-UP – CHEMICAL METHOD

If the potential for freezing exists during lay-up, a dry lay-up method is required. When a boiler is to stand idle in an exposed location for any indefinite period, it should be drained completely, being particularly careful to blow or otherwise remove all water from such places in drums, tubes, headers, superheaters, water columns, gauge glasses, etc.

3.6.1 Shallow pans, contrived to expose as much surface as possible, should be partially filled with calcium chloride or Silica gel desiccant and inserted in the "HRSG" boiler drum. Manway covers should be tightly shut, all vents and drains closed, and the boiler made as nearly "bottle-tight" as practical.

3.6.2 The calcium chloride or Silica gel is intended to absorb moisture entrained in the boiler atmosphere and should be examined and replaced or regenerated periodically.

3.6.3 Add a low pressure (5 psig / .34 bar) N_2 blanket in addition to the desiccant to further prevent oxygen attack on the water side.

3.6.4 A household type electric drive dehumidifier may be used to remove the moisture from air on the water side of the boiler in lieu of chemicals. This has the dual advantage of draining moisture to the outside and warming the air, further reducing corrosive conditions.

3.7 HOT-WET LAY-UP

Under the hot-wet method, the boiler water level is maintained close to low level but not low enough to sound alarms. Steam pressure is maintained. Proceed as follows:

3.7.1 If the boiler has been on line, increase the blowdown to reduce both suspended and dissolved solids to approximately 50% of normal operating levels. If boiler has not been on line, fill with hot deaerated boiler feedwater with "adjusted" 0_2 scavenger and alkalinity to maintain a protected boiler surface. Consult your boiler water consultant.

3.7.2 Inject steam into the evaporator using a sparging line in the lower header. Sparging line and connections can be added to an existing unit if this procedure is selected after initial installation. If the economizer is too large to heat by convection, circulate boiler water from the boiler into the boiler feed line.

3.7.3 Drain excess water from the unit as required based on the level indicators.

3.7.4 The stack can be capped to reduce steam demand if a stack damper is not installed.

3.7.5 Heat trace all non-heated lines, if required, to protect from freezing. Remember that circulation is very low, there is no guarantee that warm water will find it’s way into closed off lines.

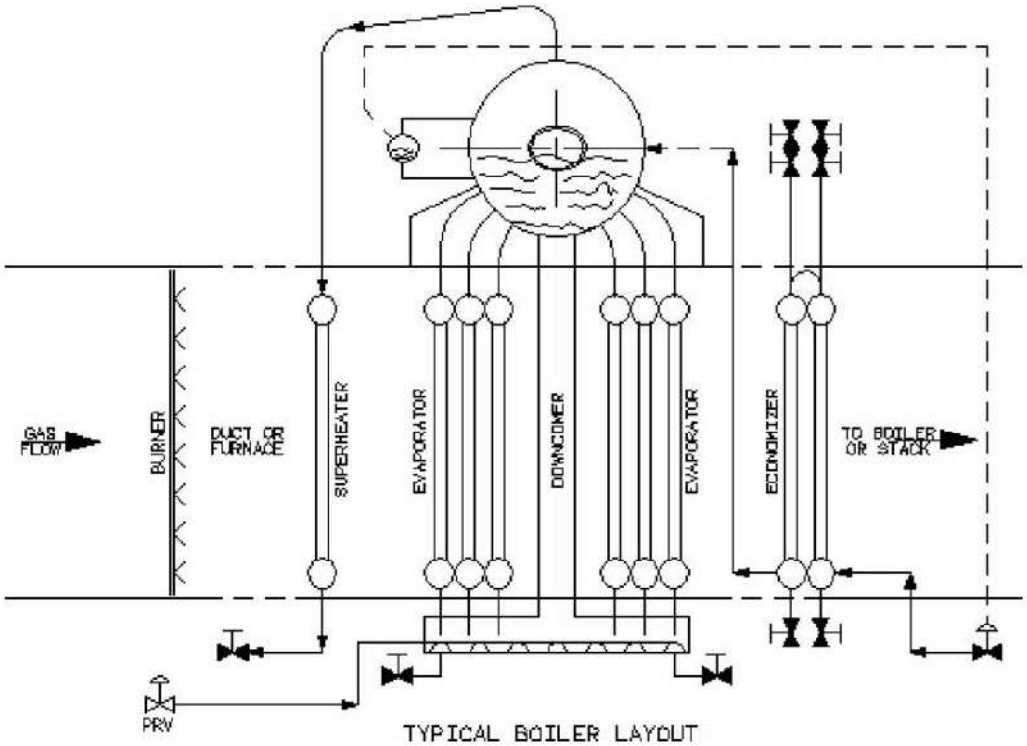

TYPICAL BOILER LAYOUT

4.0 TUBE FAILURE ANALYSIS

This section is a basic guide to some of the more typical types of tube failures found in HRSG's. The first part describes how to take a tube sample. The second part gives a written description of some different types of failures. The last part illustrates various methods for tube failure repair.

4.1 How to Remove a Tube Sample for Inspection

It sometimes becomes necessary to remove a tube sample from the HRSG heating surface areas for a waterside inspection, or to be sent out for analysis. Certain procedures should be followed to insure that the sample is removed intact, and that it is documented as to its exact location.

When removing a tube sample:

4.1.1 The tube section should be saw-cut to prevent any slag from flowing inside the sample or the good section of tubing.

4.1.2 The sample should be documented 8 inches (203mm) to 10 inches (254mm) above and below the affected area.

4.1.3 The exact location should be documented as follows (See Figure 4.1):

4.1.3.1 Tubes should be numbered and counted from left to right and inlet to outlet of HRSG.

4.1.3.2 The module, row, and elevation should be noted and marked on the tube.

4.1.3.3 An arrow should be marked to indicate which end of the sample is up.

4.2 Types of Failure

The key to analyzing a tube failure is to obtain every piece of information as to what, when, where, to what extent surrounding the failure, in addition to the failure itself. Wide open tubes are not necessarily the result of overheat. Blisters do not occur because of defective tubes. Perfectly clean, non-restricted HRSG tubes have failed from short term overheat.

It is not difficult to analyze tube failures with sample and backup data. Only a limited number of failure types require lab micrographs to determine cause, such as hydrogen embrittlement and caustic stress corrosion.

4.2.1 Tube Leaks

4.2.1.1 The cause of a tube leak can be either design or operation oriented. The object is to determine the problem and apply the appropriate remedy.

4.2.1.2 Tube leak causes can be classified as mechanical problems, excessive temperatures, or corrosion mechanism.

4.2.2 Plugging of Reheater and Superheater Headers Due to Exfoliation

Flakes of exfoliated metal from the reheater and superheater tubes may lodge in the headers and form partial or complete plugs. When the headers become plugged, flow is restricted and tubes may fail due to overheating and swelling. Exfoliated metal can also cause turbine erosion.

4.2.3 Chelant Corrosion

Chelant corrosion, or stack, develops when excess concentrations of sodium salts are maintained over a period of many months. Chelant corrosion dissolves or thins the tube, but does not cause pitting. Damage will be concentrated in areas of stress, causing thinning of rolled tube ends, threaded members, baffle edges and other unrelieved stress points.

4.2.4 Oxygen Pitting - Economizer

Excessive oxygen in the feedwater can lead to small pits and corrosion of metal on the waterside of economizer tubes. Proper deaeration of feedwater is absolutely essential for protection of the economizer.

4.2.5 Hydrogen Attack or Damage

This type of failure is found in high pressure units generally above 1800 psig (124 bar). Hard dense scale forms on the tube waterside surface allowing hydrogen to concentrate under the deposit and permeate the metal. The hydrogen reacts with the carbon of the metal to form methane, which has much larger molecules than the carbon atom. This exerts pressure, and causes the metal to rupture from within. Ruptures are violent, sudden, and

can be disastrous. Ruptures take the form of a thin opening with thick edges along the axis of the tube.

4.2.6 Failures Due to Scale

4.2.6.1 Long Term, Creep Failure is caused by a build up of internal scale, which acts as an insulator, causing a gradual increase in the operating temperature of the tube metal. The tube appears swollen with a blister or bulge. The outside surface may have an elephant hide appearance. Ruptures are thin openings along the axis of the tube, which generally have thick edges.

4.2.6.2 Short Term Overheat Failure

A rapid elevation of the tube metal temperature caused by inadequate water supply to the tube (starvation) can result in a wide rupture. The edges of the ruptures are thin and sharp. In the superheater, a short term overheat could result from a blockage of steam flow.

4.2.6.3 Oxygen Pitting (Superheater) is usually found in the tight loops of the superheater module. It is caused by water or condensate which forms in the bends after shutdown working with oxygen in the air. It manifests as pitting and corrosion of the metal close to the out of service water level in the superheaters.

4.2.6.4 Exfoliation is found in high temperature sections, such as reheaters and superheaters, which have been exposed to metal temperatures over 950 ℉ (510 °C) and have seen a number of temperature cycles. The most common area for exfoliation is the outlet legs of the reheater or superheater. Exfoliation appears as a flaking of metal scale on the inside of the tube.

4.2.7 Overheat

4.2.7.1 Long Term

- Low temperature for a long time, generally less than 1200℉ (649°C) to1300 ℉ (704 °C)
- Almost no swelling of the tube
- Tree bark texture on the outside of the tube
- Slow degradation of grain boundary strength.

- Sometimes considerable carbureted build-up or metal loss.

4.2.7.2 Intermediate Term Overheat is characterized by:

- Moderately high temperatures, generally 1300℉ (704°C) to 1600℉ (871 °C)
- General swelling indicative if accelerated creep –or-
- Slight bulges or knots

4.2.7.3 Short Term Overheat is characterized by:

- Temperatures above 1600℉ (871 °C)
- Swelling is always apparent
- Knife edge openings in carbon steels. Note that chrome steels and stainless, although swollen, will not produce knife edges.

4.2.7.4 Causes of overheating include the inability of tube to transfer heat to the cooling medium due to scale impeding heat transfer, and the inability of tube to transfer heat to cooling medium due to plugging or other stoppage of cooling medium flow.

NOTE: Ninety-five (95) percent of superheater short term overheats occur during start-up or operation below 20% GT load.

4.2.8 External corrosion can be caused by oil ash (sulfur-vanadium attack at high temperature, out of service or low temperature sulfur (H2SO3) attack and caustic gouging (leaking tube seat).

4.2.9 Internal corrosion can be caused by oxygen pitting, concentration cell corrosion, under deposit alkaline attack, caustic corrosion in austenitic stainless steel, caustic stress corrosion (inter granular shear face), and hydrogen embrittlement ($2H_2 + 1\ C \Rightarrow CH_4$ at grain boundaries)

4.2.10 Mechanical Corrosion can include stress tears (tube failures on a 45° shear plane), fatigue, such as circumferential cracks straight across tube thickness, trans granular shear face, or cracks propagating from the outside in, and erosion, which causes thinning of the tube with no swelling.

NOTE: Most tube fatigue failures end in stress tears as do some short term overheats. The reaction force from the escaping medium, plus a stress concentration at the end of a crack produce tearing.

4.2.11 Tube Defects

4.2.11.1 Tube defects in welded tubes can be caused by lack of fusion in welds or non-homogeneous skelp (strip that is formed into tube).

4.2.11.2 Tube defects in seamless tubes can be caused external or internal laps, imperfections or inclusions in the steel, and by non-concentric center or oval center. Note that due to the drawing process, it is virtually impossible to produce a non-circular tube O.D. Any tubes with an oval O.D. should be suspected of physical deformation or overheat.

4.2.12 Reporting Failures

Please include the following information when reporting failures to VPI:

- Where exactly in the boiler, with sketch
- Start-up related information - or - Operation information
- Date/time of discovery
- How discovered
- Description, sketch, and photos
- Possible cause
- Extent of damage
- Repair procedures
- Hydrostatic test results

4.3 Recommended Tube Leak Repair Procedure

In the unlikely event a tube leak occurs, Vogt Power suggests the following repair procedure.

4.3.1 Identify the location of the leak. Hydrostatic pressure from feedwater pumps may be necessary to visually identify location of leak. Install scaffolding in access lance if leak is located in upper portion of tube bank.

4.3.2 Vent the unit if hydrostatic pressure has been applied and drop the water level below the leak.

4.3.3 If access to the tube leak is obstructed by adjacent tubes, cut a path through the tube bank. The size of the pathway is to be determined by the welder making the repair.

4.3.4 Remove fins from the area directly around the leak on the leaking tube.

4.3.5 Ultrasonically test and dye penetrant test the area around the leak to determine the nature of tube failure.

4.3.6 Repair the tube leak.

4.3.7 Replace access path tubes in their original locations by removing approximately 3" (76mm) of fin at each weld joint and re-welding using the window weld procedure.

4.3.8 Dye-check each weld before blocking access with the next tube.

4.3.9 When all work is complete, hydrostatically test the unit.

NOTE: Above work is to be performed per ASME Boiler Pressure Vessel Code Sections I and IX.

4.4 Alternate Tube Leak Repair Procedure

If the window weld repair procedure is undesirable, suggests removing the leaking tube from service per the following procedure.

4.4.1 Identify the location of the leak. Hydrostatic pressure from feedwater pumps may be necessary to visually identify the location of the leak. Install scaffolding in access lane if leak is located in upper portion of tube bank.

4.4.2 Vent the unit if hydrostatic pressure has been applied. Completely drain the boiler or economizer based on the location of the leak.

4.4.3 Cut an oval section in from the top and bottom headers directly above the leaking tube (See Figure 4.2). Access to the top and bottom headers is provided through access doors in the attic and basement spaces.

4.4.4 Weld a steel plug in both ends of leaking tube (See Figure 4.3).

4.4.5 Re-weld oval sections previously removed from top and bottom headers.

4.4.6 When all work is complete, hydrostatically test the unit.

NOTE: Above work is to be performed per ASME Boiler Pressure Vessel Code Sections I and IX.

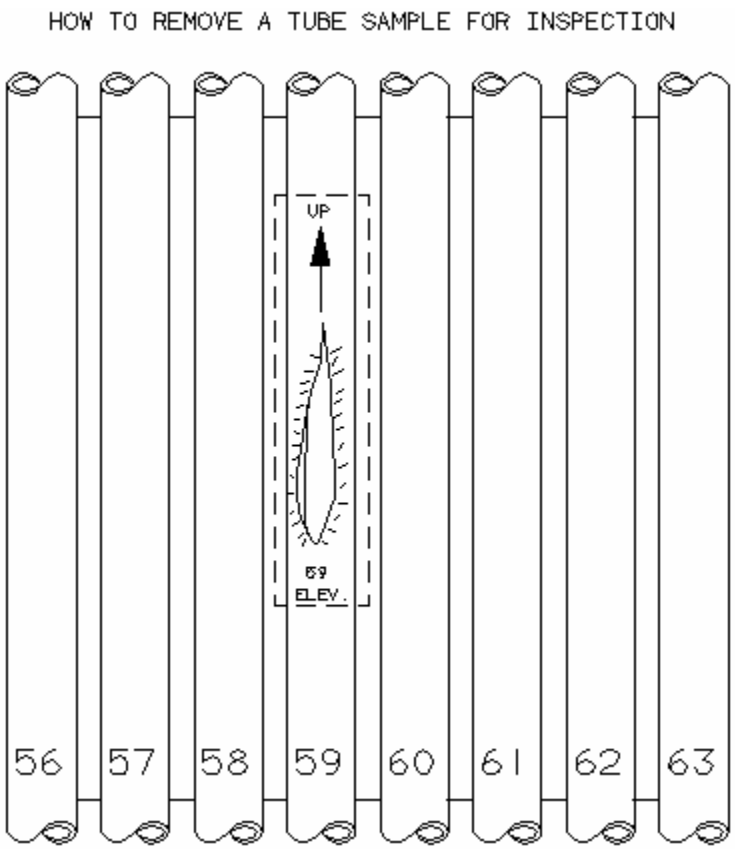

Figure 4.1 Typical Tube Removal Location Index

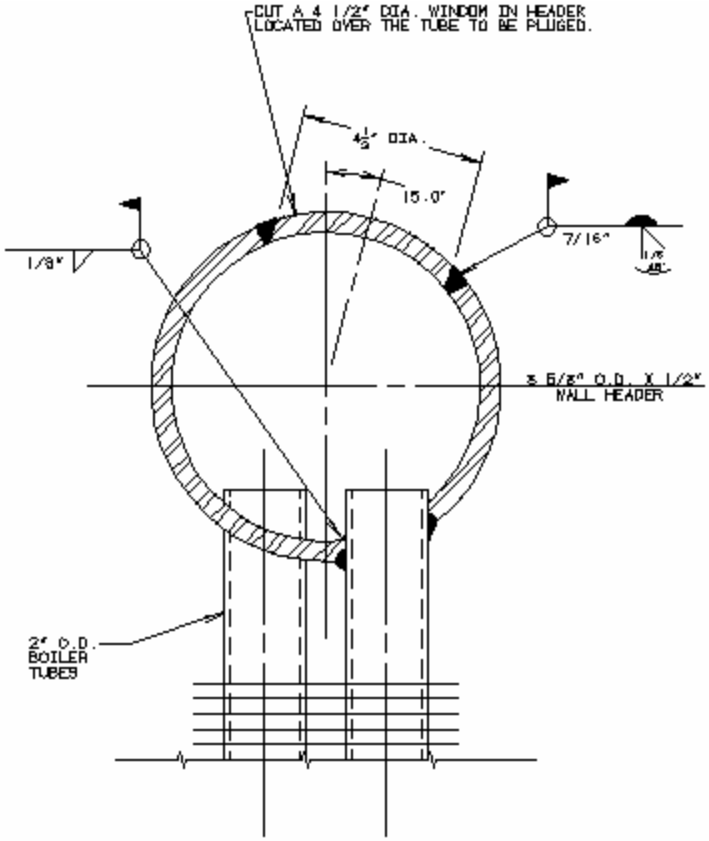

Figure 4.2 Typical Header Oval Removal

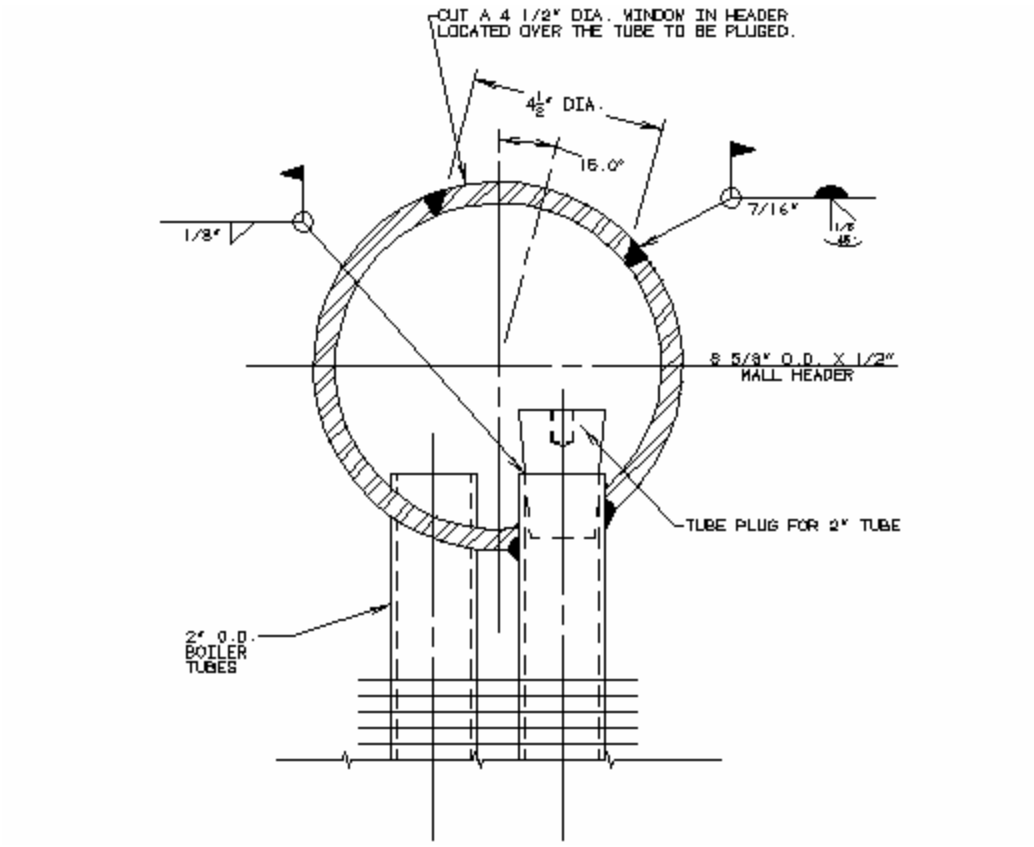

Figure 4.3 Typical Tube Plugging Process

5.0 TROUBLESHOOTING PROCEDURES

The ability to troubleshoot is not an inborn talent. It is a skill that can be acquired by anyone with a suitable background in boiler operations. One can become a good troubleshooter using:

- Sufficient knowledge of HRSG operations.
- Comprehension of the data contained in the HRSG Operation and Maintenance Manual.
- Sufficient knowledge of other types of power generation equipment
- Sufficient skill at interpreting instrument readings.
- Grasp of a logical approach to troubleshooting.

Logical troubleshooting does not recognize "Easter-egging," "cook-booking," or "trial-and-error" methods. The "Easter-egger" makes unsupported guesses as to the location of the problem. The "cook-booker" looks for clues in the troubleshooting chart of the technical manual. The "trial-and-error" method starts at one end of the equipment and works toward the other inspecting the installed pressure and temperature instruments. If any of the three methods locates the problem in a reasonable length of time, it is luck, not skill. Finding one bad or partially bad tube or weld among hundreds or thousands is not very easy to do by illogical methods.

Logical troubleshooting is a time-proven procedure used by all accomplished operators in any industry. Most of them have applied the procedure so often that they no longer pay attention to its fine points.

Probably no two operators would explain the procedure in the same manner, but all would agree that logical troubleshooting consists of a series of sequential steps based on observation and available fact that systemically narrow the problem down to the faulty part. Some would list the procedures in three or four steps. Others would count a dozen or more. Regardless, the principles would be the same.

This procedure applies six steps as a reasonable process. The steps in their sequential order are:

Step 1 - Symptom Recognition
Step 2 - Symptom Elaboration
Step 3 - List Probable Faulty Functions

Step 4 - Localize the Faulty Function
Step 5 - Localize the Faulty Heat Transfer Section
Step 6 - Failure Analysis

5.1 STEP 1 - SYMPTOM RECOGNITION

The first step in any troubleshooting process is recognizing the indication of a problem. Recognizing a problem in an HRSG is not always easy to do since conditions of less than peak performance are not always apparent. Lack of steam generation, low steam temperature, and low steam pressure are just a few of hundreds of examples.

There are many ways that the existence of a problem can be revealed. Obvious problems will undoubtedly be reported by the operators. These usually include complete or almost complete malfunction of the equipment. Problems not easily noticed are those that cause degradation in equipment performance.

5.2 STEP 2 - SYMPTOM ELABORATION

Breaking out tools, equipment specifications, drawings and proceeding headlong into troubleshooting on merely the original identity of a symptom is often proves to be an unnecessary expenditure of energy. By themselves, low steam flow, low steam temperature, low steam pressure, or excessive blowdown are symptoms of a problem. However, none of these symptoms alone can define the problem. It is counter-productive to attempt a solution before the problem is completely defined.

The procedures involved are dependent upon the available aids designed in the equipment and the nature of the original symptom. The aids include control system readings and built-in performance measuring indicators. Additional information can be obtained about any malfunction as the result of a systematic control system check. With a fair knowledge of how an HRSG works, manipulation of appropriate controls and switches and corresponding checks on equipment gauges and thermometers will reveal how the problem is affecting the entire HRSG. From these clues, it is possible to narrow down probable areas of the steam generator circuit that could contain the problem.

5.3 STEP 3 - LIST PROBABLE FAULTY FUNCTIONS

The third step requires that the troubleshooter take an "educated guess" as to the probable cause of the problem. From the elements of the symptom that have been identified, determine the most logical source. Locations should be confined to major subdivisions of the equipment, the major functional units. "Educated guesses" are logical conclusions made from knowledge of how the equipment works.

As an example, assume that the malfunctioning HRSG has low high pressure steam flow.

The "educated guess" could include any of the following: (1) HP economizer, (2) HP evaporator, (3) HP superheater, and (4) control system. Making an "educated guess" that the problem is a bad tube because past equipment problems were caused by bad tubes is not helpful. The purpose here is to use valid reasoning to isolate the probable functional area which may contain the problem. It may well be that the specific problem is a bad tube, but wholesale tube substitution takes a lot of time and quite often introduces additional problems.

Even an accomplished operator may not be able to list all of the functional units that are probable sources of a problem. But, with the exception of very obvious problems, any multi-unit piece of equipment will have two or more functional units that are likely sources of a given problem.

5.4 STEP 4 - LOCALIZE THE FAULTY FUNCTION

In this step, one of the "educated guesses" must be selected for testing. It is not necessarily the one that was thought of first. Selection of the functional unit to be tested (or verified) first should be based not only on priority of validity but also on difficulty in making necessary tests. Under some circumstances, a troubleshooter might elect to test the second most likely "educated guess", because the latter might involve difficulties that make testing very inconvenient (such as shutting down the unit) or require physical modification to modules that might later prove to have been unnecessary (such as cutting inspection holes in headers). Like all others, this step in troubleshooting procedure places emphasis on common sense thinking rather than the resultant action.

After selecting the order in which to check the HRSG functions listed, verify the first selection. Checks will normally be made at the output test point of the suspected unit. For instance, the operator could check the output at the test points provided for each unit listed as a probable faulty function.

If the operator does his “mental” work properly, manual work in gaining access to pressure gauges and equipment inspections can be limited to a bare minimum. This procedure differs from trial-and-error methods where the operator searches from point to point, hoping to locate the problem by luck. This waste valuable time and shows an unwillingness to rely technical knowledge that indicates that only luck will find the problem.

Upon completing a verification of the probable faulty unit selected, an operator will arrive at one of several conclusions. The test may verify that (1) this is the unit in which the problem lies, or (2) the problem could be in this unit plus one or more units from which it receives water or steam, or (3) the problem is not in this unit, or (4) the output looks suspicious and further verifying tests need to be made.

Whatever the conclusion, additional information is now available that can be used to substantiate or eliminate suspected units on the list or provide evidence for adding another. Tests of suspected unit outputs are continued until the faulty unit(s) is identified. The problem has been isolated to a fraction of the total number of circuits and parts in the equipment. At this point, the search can be confined to the functional area isolated.

Note: There are some types of equipment, such as instruments, that cannot be easily divided into functional units. In troubleshooting of this type of equipment, Steps 3 and 4 can be eliminated from the troubleshooting procedure.

5.5 STEP 5 - LOCALIZE THE FAULTY HEAT TRANSFER SECTION

After the faulty unit has been isolated, the next step is to identify the faulty modules. The procedures are used as before, now on a smaller scale. The unit is subdivided into circuit groups by function, and valid technical reasoning is employed to select those that might probably contain the problem. Using this procedure, the operator can find the problem without going through the unnecessary, time-wasting chore of test-point checking from one end of the unit to the other.

Work from the setting drawings or block diagram of the HRSG. Apply the information obtained from the preceding steps regarding the nature of the problem.

In narrowing down the problem to a single functional group of modules, employ a process called bracketing. In this process, brackets are placed, mentally or in pencil, around the module group in which the problem lies. Initially, a bracket is placed at each input known to be good and at each output known to be bad. As each deduction is made and verified by a test, the input or output bracket is moved to the point in the setting drawings where the test was made. In this manner, the closing brackets systematically narrow the fault to a single heat transfer section. In selecting a point on the servicing block diagram to which one of the brackets is to be moved, consider two things: the faulty characteristics of the improper module and the types of steam or water paths contained in the unit.

There are no hard-and-fast, step-by-step procedures in bracketing, but there are some realistic general rules. Examine the characteristics of the faulty module output to determine the module function that either generates or controls the improper characteristics. If the test does not reveal sufficient information for a valid bracket move, make another "educated guess."

5.6 STEP 6 - FAILURE ANALYSIS

The troubleshooting procedure thus far has narrowed the problem down to a single module consisting of tubes, headers, and a few parts. If there is no output from the circuit, it may be wise to resort to hydrostatic testing. However, such checks can be minimized if there is an external indication such as distorted HRSG casing or insulation, or unexplained water release.

When the faulty part has been identified, it should not be replaced until the maintenance personnel can substantiate that it is causing the actual problem. The suspected tube or valve may not be the reason, or the only reason, for the fault output of the HRSG boiler circuit. If the operator replaces the part without an adequate technical reason, he may not have cured the problem. Analyze the failure before making the repair.

5.7 SUMMARY

The six-step troubleshooting procedure is designed to isolate a problem in a logical manner. Success in using the procedure is dependent upon knowledge of the equipment and skill in using the technical manual and test equipment.

6.0 MAINTENANCE CHECKLISTS

Outage maintenance preparation requires proper securing of HRSG gas side casing and steam generator pressure parts so that no danger exists for personnel. The HRSG can be cleaned of loose debris or ash deposits from oil firing or SCR operation in a progressive sequence from the combustion turbine to outlet stack.

Deposits should be removed prior to any extended outage as they may contain an appreciable amount of sulfur or sulfur compounds. The deposits can absorb moisture contained in the atmosphere and form sulfuric acid which will corrode various pressure parts. Water washing is not recommended, unless absolutely necessary, and if it is to be done it should be done thoroughly. High pressure air or water lances may be used to remove ash deposits from extended heat transfer surfaces attached to the tubes. Soda ash may be added to the wash water to raise the pH to approximately 11.5 to 12.0. If sulfur compounds should remain on the extended surface tubes after a water wash, the sulfur will form sulfuric acid and corrosion may result. A partial water wash is worse than no water wash at all.

When the unit is in service, data including all HRSG gas side temperatures, water side temperatures, pressures, and flows, and gas side pressure drops should indicate problem areas of potential deposit accumulation.

The following paragraphs provide a simplified checklist for outage planning. The checklist serves as a basis for developing a detailed outage inspection plan.

6.1 DAILY WALKDOWN CHECKLIST

	Visual check points during base load and / or normal operation.	**Checked**
6.1.1	Ductwork external casing / expansion joints	
	- Check casing temperature, note any hot spots / paint discoloration	_____
	- Check for unusual noise inside duct	_____
	- Check metal bellows expansion joints for any damage, cracks, leaks, or discoloration	_____
	- Check expansion joint fabric and insulation for any damage / leaks	_____
6.1.2	HRSG at Grade Level	
	- Check for steam / water leaks at valve packing, handholes, manways and piping flanges	_____
	- Check under unit / bottom casing and around the skids to	_____

make sure area is dry _____
- Check for noise / vibration conditions at pump and/or fan skids _____
- Check access doors for leaks / hot spots _____
- Check casing drains for leaks / hot spots _____

6.1.3 HRSG at Steam Drum Elevation
- Check for steam / water leaks at valve packing, manways and piping flanges _____
- Check gage glass for leaks, visibility and cleanliness _____
- Check gage glass illuminator light bulbs for operation _____
- Check safety valves for any steam leaks _____

6.1.4 General
- Inspect temperature gages and pressure gages for correct operation, check pressure gages for leaks. _____
- Check the burner flame using the viewports. Look for flames impinging on the tubes or liners, or uneven flames. _____

6.2 Drums, Headers, and Tubes - Water Side

Checked

- Steam drum(s) for corrosion, scale, pitting, or other metal reduction _____
- Clean manhole seats, resurface if necessary, and replace gaskets _____
- Inspect steam separation equipment in steam drum(s) for corrosion, deposits, security, and tightness of joints _____
- Check condition of all chemical feed and blowdown lines inside pressure parts for plugging, security, leaks, and orientation _____
- Check freedom of expansion of drums and headers, note any damage to liners, etc. _____
- Inspect tubes for corrosion, deposits, and pitting _____
- Replace all handhole gaskets on headers, inspect manhole plates and stud threads _____
- Make a complete water side examination and check for scale build up as necessary _____

6.3 Drums, Headers, and Tubes - Gas Side

	Checked
- Inspect exterior of drums for signs of leaks, cracks, corrosion or overheating	_____
- Check condition of exterior insulation; replace or repair as necessary	_____
- Inspect drum supports for condition and check expansion clearance	_____
- Inspect all blowdown connections for expansion and flexibility of support; inspect all piping and valves for leaks	_____
- Visually check water wall tubes and fins (if applicable) for cracks	_____
- Inspect exterior of all tubes for corrosion, build up, erosion, blisters, bowing, etc.	_____
- Inspect headers for signs of steam generator water leakage	_____
- Examine exterior of headers for corrosion, erosion, and condition of insulation	_____
- Examine module hangers for damage or overheating	_____

6.4 Superheater Modules

	Checked
- Inspect superheater header and tubes for corrosion, erosion, overheating, misalignment, etc.	_____
- Inspect superheater header and tubes for complete freedom of expansion	_____
- Verify cleanliness and security of vent and drain connections and valves	_____
- Examine superheater header and tube supports for security	_____

6.5 Economizer Modules

	Checked
- Inspect interior of tubes, return bends, and headers (where possible) for corrosion, oxygen pitting, and scale	_____
- Inspect exterior of tubes and headers for corrosion, erosion, and deposits on top of lower headers, clean if needed	_____
- Verify cleanliness and security of vent and drain connections and valves	_____
- Inspect exterior of economizer casing for leaks and tightness of access doors	_____
- Verify condition of casing insulation (inside and outside)	_____

- Examine superheater header and tube supports for security _____

6.6 Casing, Insulation and Personnel Protection

Checked

- Test studs and washers for welds, expansion allowances, and tightness _____
- Inspect condition of insulation under liner where visible _____
- Inspect burner tile / liners for deterioration and signs of flame impingement _____
- Inspect exterior of casing and support steelwork for bent, broken, or bowed members; repair as necessary _____
- Inspect all access doors, observation doors, etc., for tightness; renew gaskets and/or glass as required _____
- Check condition of all baffle(s) and with particular attention to signs of leakage and security of supports _____

6.7 Water Columns

Checked

- Check gauge glasses for leaks, cleanliness, and visibility _____
- Check illuminators, reflectors, and mirrors for cleanliness and breakage _____
- Check operation and condition of gauge cocks and valves; inspect chains and pulleys if used; repair or replace as necessary _____
- Verify that water column is free to expand with boiler _____
- Inspect water column connections to drums for leaks, internal deposits, and missing insulation _____
- Verify operation of high, high-high, low, and low-low water alarms _____

6.8 Drum Water Level Control Valve

Checked

- Examine valve for leaks, operability, and cleanliness (do not dismantle if operation has been satisfactory) _____
- Check connecting lines and mechanisms for functionality _____

6.2.9 Valves

Checked

- Check condition and operation of all feedwater, blowdown, drain, and other miscellaneous valves; replace parts as necessary and repack _____

6.10 Safety Valves

The first four items should be performed only if the valve failed to perform properly during testing. All testing and repairs must be conducted by a qualified craftsman from the manufacturer, his certified representative, or an assembler.

	Checked
- Check condition of valve nozzle and disk seats; lap seats	_____
- Check condition of valve internal parts for corrosion, galling, and wear; recondition or replace	_____
- Check valve springs for cracking, pitting, resiliency, and end coil squareness	_____
- Check spindle for straightness and adjust ring threads for freedom of movement	_____
- Test operation of valves by steam pressure (on the boiler if necessary), and adjust to open and close at proper pressures; record set pressure and blowdown	_____
- Check discharge and drain piping for security, and allowance for boiler expansion	_____

6.11 Pumps and Fans

	Checked
- Check bearings for wear or shaft scoring	_____
- Check operation of bearing thermocouples for bearing temperature	_____
- Check cooling water inlet lines and drains for cracks, supports, and corrosion	_____
- Inspect pump drain box	_____
- Inspect shaft seals or glands	_____

6.12 Catalyst Banks / Ammonia Injection Grid

	Checked
- Inspect ammonia injection piping for deformation, verify supports	_____
- Inspect ammoinia injection ports for deposits or plugging. Clean as necessary.	_____
- Inspect catalyst bank structure for loose bolts or damaged steel. Replace / repair as necessary	_____
- Inspect catalyst for plugging / fouling	_____

6.13 SPIRAL WOUND GASKET BOLTING-UP PROCEDURES

Metallic Spiral Wound gaskets are typically used for high pressure drum manways, feeder header handholes, and pipeline flanges that must successfully pass a hydrostatic test and maintain a satisfactory seal under operating conditions. Flexible graphite or composite gaskets are commonly used on LP drum manway. Section I, Tab 1 of this manual provides the reference for the steam drum manway gasket specifications and installation instructions.

On high temperature applications, considerable relaxation of bolt stress can occur due to creep of the bolt material if the bolts are not properly torqued at installation. The level of relaxation depends upon the bolt material and temperature to which the bolt is subjected. In applications where a bolt is operating near the upper extremity of its recommended temperature range, it is highly feasible that the relaxation will be so great that leakage will occur after a period of time on a flange that has successfully passed the hydrostatic test. It is therefore essential to pre-stress a bolt to a degree that will guarantee maintenance of a stress level at operating conditions that will ensure a leak-tight joint.

In order to create an effective seal, any gasketed joint requires application of an even compressive force. From a practical standpoint, in order to achieve this, a very specific bolt-up procedure must be followed. Section I, Tab 1 of this manual provides the reference for the steam drum manway gasket specifications and installation instructions. Critical points for long term integrity of the gasket include:

- Inspect gasket surfaces. They must be clean and free of imperfections. Any foreign material should be carefully removed. Do not score the seating surface when cleaning.

- Bolts should be free of dirt and grit and well lubricated.

- Torque the bolts as described in the bolting procedure. Gasket must be evenly compressed to avoid damage to the gasket which cannot be corrected by subsequent tightening.

- In view of the inaccuracies associated with conventional bolt tightening tools, including torque wrenches, it may be pertinent to consider a more accurate method of pre-stressing bolts on flanges which continually suffer from leakage problems or where it is critical from a safety standpoint.

- Spiral wound gaskets should be completely covered by the manway cover. If the gasket is visible along one edge it is likely not centered correctly. If it is

visible all around the perimeter it is the wrong size. Either will quickly lead to failure.

A spiral-wound gasket will provide a reliable seal if properly installed in the application for which is designed. Please remember that the performance of spiral-wound gaskets is not solely dependent on the gasket itself but on a combination of variables, many of which are outside the control of the supplier. If joint leakage or a failure occurs, it is most often due to something other than failure of the gasket. If leakage does occur, the following items should be checked:

1. Is the correct new gasket being used?
2. Are flanges clean and true, and free of surface damage?
3. Do flanges have the correct surface finish?
4. Are nuts and bolts of the correct material and well lubricated?
5. Has a proper bolt-up procedure been followed and sufficient preload applied?
6. Is the gasket properly centered on the manway door? Is the gasket covered by the door?

If you have any problems, contact our technical service department - they are here to assist you! Please have the following information available when calling:

a. Operating pressure and temperature
b. Manway dimensions and shape (ie, 14” X 18” oval)
c. Manway ring ID
d. Manway cover OD
e. Manway bolting circle information (no. of bolts, diameter of bolts, bolt circle dimensions)

7.0 PRESSURE PART LIFE

The successful operation, maintenance, and HRSG Pressure Part Life depends on the proper start up, loading, and load changing procedures. These procedures gain in importance as units undergo frequent starting and loading cycles.

In many instances, HRSG pressure parts appear to start without difficulty in spite of improper methods. During the initial period of service, no problems will be evident. Close inspection of the pressure parts may later reveal unnecessary damage. The damage may include tube metal exfoliation, racking, swelling, or cracking of HRSG pressure parts. These conditions can be avoided by proper supervision of the HRSG by the operators.

Pressure part life is "used up" or expended by a combination of thermal stress, pressure stress, and high temperature creep. Thermal fatigue is the repeated thermal stress and strains produced by uneven heating or cooling when a pressure part shell is restrained and cannot expand or contract uniformly. Pressure stress and strains occur as the pressure part operating pressure is increased or decreased during operation. The thermal and pressure stresses produce fatigue cycle effects on pressure parts. These cycles are generated by the transient operation of the combined cycle plant such as start ups, shut downs, or load shifts. Creep is the change in physical properties in pressure parts that operate at elevated temperatures for prolonged periods of time.

During steady-state operation, the combined thermal and pressure stresses in pressure part shells are maintained at a relatively low level. However, during transient operation such as start ups, shutdowns, load changes, and emergencies, large thermal stress can be superimposed on the pressure stresses in the pressure part shells. A severe transient may produce yielding, resulting in the expenditure of a certain percentage of the pressure part fatigue life. The amount of life expenditure depends on the level of combined stress developed during each operation.

The expression of life expenditure due to fatigue and creep effects is referred to as cumulative damage, creep-fatigue damage, or pressure part life expenditure. The calculation of life expenditure is achieved by the life fraction rule outlined in ASME Section III Code Case N-47 for elevated temperature applications.

7.1 CREEP

The life of high temperature pressure parts such as superheaters and reheaters are affected by CREEP deformation. Creep deformation occurs in pressure parts exposed to high temperature for prolonged periods of time. Creep amplifies the damage caused by thermal and pressure stresses. Creep damage is typically modeled in three stages.

Stage I — The initial pressure part deformation is marked by small creep strains by a decreasing deformation rate during the initial service period.

Stage II — The continuing creep deformation is differentiated from Stage I deformation by an extremely small variation in deformation rate providing an essentially constant creep rate.

Stage III — In this final stage of creep deformation, creep is distinguished by an accelerating deformation rate leading to rupture. The creep-rupture phenomenon is modified by previously identified operating transients and leads to an accelerated failure mechanism referred to as creep failure.

7.2 THERMAL STRESS

Thermal Stress does not generally have an immediate effect on HRSG pressure part life. For example, if the HRSG is started one time at 500℉/hr (260 °C/hr) steam/water mixture temperature ramp, a pressure part shell crack will not develop immediately. *It is the repeated cycling of such high stress that causes cracking.* Thermal stress is most intense at the shell surface, since it is caused by the difference between the inner or outer shell surface temperature and average metal shell temperature.

In order to explain the sources of the thermal stresses, which can produce pressure part cracking, four typical transients are considered. These are as follows:

1. Cold Start
2. Hot Start
3. Daily Load Change Cycle
4. Shutdown

Before considering these specific transients occurring in thick shell pressure parts, it is necessary to recognize that initial pressure part shell temperature, pressure, and final pressure part shell temperature are dependent on load. The HRSG High Pressure drum shell stresses will be investigated as a typical HRSG pressure part in the following paragraphs

For a cold start, the drum shell temperature changes with time, for a given rate of CT load increase. Prior to cold start, both the inner and outer pressure part shell surface temperatures are initially near ambient temperature. As the CT is started and loaded, heat is absorbed by the heat transfer surface or pressure parts increasing the temperature of the steam/water within the pressure parts.

The HRSG heat transfer modules absorb this heat with the extended surface or fins and transfer the heat to the outside surface of the tubes. The result of this absorption is to increase the outside tube wall temperature. The increase in outside tube wall temperature above the inside tube wall temperature creates a temperature differential. The temperature differential transmits the heat from the outside wall to inner wall by conduction through the tube shell increasing the inside tube wall temperature. Conduction transient heat transfer occurs in proportion to the wall thickness of the pressure part. In the case of a thin walled pressure part such as an evaporator module tube, this process occurs very rapidly resulting in a minimal inside to outside tube wall temperature differential.

The heat energy is then transferred to the fluid inside the tube causing the water temperature to rise and produce a steam/water mixture. The increased steam/water mixture temperature in an evaporator tube results in a fluid density change as outlined in Section 1, Tab 2. The evaporator tube is a component of a Natural Circulation Loop which contains a steam drum. In the drum the heated fluid contacts the drum shell inner surface. The drum shell outer surface is at ambient temperature because it is not exposed to the hot steam/water mixture.

The drum shell inner surface temperature follows the HP Evaporator steam/water mixture temperature very closely, increasing fairly rapidly, to the full load temperature value. The drum shell outer temperature lags well behind, thus producing an appreciable temperature difference between the inner surface and outer surface of the drum shell. *It is the difference in inner and outer drum shell temperatures that produces thermal stresses.*

Compressive stresses occur in the inner drum shell surface because the increased drum shell surface temperature creates an expansion force in the inner drum shell surface. The expansion of the inner drum shell surface is restrained by the outer drum shell surface which is still cold. If the start up water/steam mixture temperature ramp and associated pressure are sufficiently severe, the inner drum shell surface material yields in compression, so that the residual tensile stress results when full load, steady state conditions are reached. This residual tensile stress will then release or "soak out" depending on operating temperature and time to next shutdown or load change. The high pressure outer drum shell surface goes into tension, and then decreases to zero

when steady state is reached, if yielding has not occurred. Repeated yielding or cycling of stresses will use up or expend pressure part cyclic life as cyclic fatigue damage.

The magnitude of thermal stress and strain produced in any section of the pressure part is proportional to the difference between the temperature at the location and the pressure part average temperature. The maximum thermal stress and strain occur at the pressure part surfaces. If the pressure part surface temperature rate of change is sufficiently rapid, the surface thermal stress will exceed the yield stress in compression, so that a residual tensile stress is produced in the drum shell outer surface. When the steam/water temperature is decreased, the reverse situation occurs. The inner drum shell surface stress becomes a tensile stress at this time. The residual tensile stress and strain during the constant temperature portion of the cycle constitute a "hold or soak time". If there is time enough at the soak temperature, the stress due to this cycle will partially relax, and another cycle will produce like effects, but they are cumulative toward causing cracks. Risk of cracking occurs when the thermal stress exceeds the yield stress of the drum shell material. Furthermore, the risk of cracking greatly increases due to prolonged operation at elevated temperature (higher than rated temperature). This happens because material yield stress values drop substantially with temperature. Several load changes will consume considerable amounts of pressure part life.

During a typical HOT START, the initial inner and outer drum shell surface temperature vary approximately as they would during a COLD START. The drum outer shell temperature is initially higher than the inner shell temperature because the heat transfer surface acts as a condenser without heat input. As the start up proceeds, the drum outer shell temperature first dips and then, as the inner shell temperature increases, the outer shell temperature levels off and then increases to full load inner shell temperature. The outer shell temperature lags behind the inside shell temperature during its increase, so that during the first portion of the cycle the inner shell surface is hotter than the outer shell surface, and during the latter portion of the cycle the temperature difference is zero. This reversal in temperature change between the inner and outer drum shell surface temperatures causes a reversal in thermal stresses, using up the pressure part cyclic life.

During a typical Daily Load Cycle, the steam/water mixture in contact with the inner drum shell surface goes through a complete cycle of first increasing, then holding at a constant value, and then finally decreasing to the initial level (this corresponds to a load increase), operation at a constant load for a period of time, and then a load decrease to the original load. The inner drum shell surface follows the steam/water mixture closely since it is in contact with the steam/water mixture, and the surface heat transfer coefficient is high. The drum shell center temperature lags considerably behind during

both heating and cooling. The drum shell average temperature is intermediate between the inner and outer shell surface temperatures.

Shutdowns can be equally important. Steep down ramps will similarly cause the pressure part surface to yield in tension and consume cyclic life. Whenever the yield strength is exceeded during start ups, load changes, and shutdowns, material cyclic life is expended or used up, towards initiating a crack. Once such a crack is initiated, excessively steep ramps are likely to swiftly drive the crack deeper.

The magnitude of the thermal stress and strains is dependent on:

1. The extent and rate of temperature change.
2. The surface heat transfer coefficient.
3. The massiveness (diameter and thickness) of the pressure part.
4. Thermal properties of the material.
5. Thermal stress concentration factors in highly stressed regions.

In general, large diameter and thick shell pressure parts such as High Pressure Drums or Superheater/Reheater headers, fast rates of temperature change, and large amounts of change, will all cause large thermal stress and large expenditures of cyclic life.

<u>It should be emphasized that at any time before a crack is initiated there may not be any external symptoms of operating difficulty, or visible evidence of a crack.</u> The operators might assume that no damage has been done. The strain damage has been done, however, and is adding up so that it will finally produce a small or microscopic crack. Small, microscopic cracks can be drawn into deep or macroscopic (visible) cracks during severe ramps, because the shell surface is stretched in tension, pulling open the cracks.

<u>IMPORTANT</u>: IT IS IMPERATIVE THAT THE OPERATORS FOLLOW THE RECOMMENDED STARTING AND LOADING INSTRUCTIONS TO MAXIMIZE PRESSURE PART LIFE AND TO OPTIMALLY EXTEND AVAILABILITY AND RELIABILITY. SEE SECTION I, TAB 5.

8.0 WARRANTY, INSPECTION AND MAINTENANCE REPORTS AND FORMS

See the following pages for Warranty, Inspection and Maintenance Reports and Forms.

Equipment Failure Report

Report No.:_____

Site:_____

Prepared by:_____

Module:_____

Signature:_____

Unit:_____

Date:_____

- ❑ The following piece of equipment has deemed to have failed and has been replaced by an available spare.
- ❑ The following piece of equipment has deemed to have failed and has not been replaced.
- ❑ Under the terms of the warranty agreement is it required that the equipment be replaced or repaired by Vogt Power, Inc.

Equipment Descriptions: **Serial No.:**_____

_____

_____

Type:

- ❑ Instrumentation
- ❑ Electrical
- ❑ Mechanical

Description of Failure:

_____

_____

_____

Associated Maintenance Report: _____

Failure Category:

- ❑ Non Critical
- ❑ Critical

For Client:_____ Date:_____ Signature:_____

Please reply by fax within 2 hours Vogt Power International (502) 891-1960

Vogt Power Comment

The Claim for equipment replacement under the terms of the warranty has been:

- ❑ Accepted, please issue shipping permit to Vogt Power office.
- ❑ Rejected, for the following reasons:

_____

_____

_____

For Vogt Power:_____ Date:_____ Signature:_____

Inspection & Maintenance Record

Ducting Record _____

Boiler Inspection:_____

Vogt Power Reference no:_____

Inspection Interval:_____

Plant no:_____

Maintenance Interval:_____

Boiler Location:_____

Year of Construction:_____

Date	Inspection	Maintenance	Inspection Location	Name Employee	Signature	Accept (Y/N)	Remarks

Inspection & Maintenance Record

Equipment Record _____

Boiler Inspection:_____

Vogt Power Reference no:_____

Inspection Interval:_____

Plant no:_____

Maintenance Interval:_____

Boiler Location:_____

Year of Construction:_____

Date	Inspection	Maintenance	Equipment Reference No.	Name Employee	Signature	Accept (Y/N)	Remarks

Inspection & Maintenance Record

Expansion Joints Record _____

Boiler Inspection:_____

Vogt Power Reference no:_____

Inspection Interval:_____

Plant no:_____

Maintenance Interval:_____

Boiler Location:_____

Year of Construction:_____

Number	Date	Inspection	Maintenance	Name Employee	Signature	Accept (Y/N)	Remarks
01							
02							
03							
04							
05							
06							
06							
07							
08							
09							
10							
11							
12							
13							
14							
15							
16							

Inspection & Maintenance Record

External Insulation Record _____

Boiler Inspection:_____

Vgot Power Reference no:_____

Inspection Interval:_____

Plant no:_____

Maintenance Interval:_____

Boiler Location:_____

Year of Construction:_____

Date	Inspection	Maintenance	Name Employee	Signature	Accept (Y/N)	Remarks

Inspection & Maintenance Record

Internal Insulation Record _____

Boiler Inspection:_____

Vogt Power Reference no:_____

Inspection Interval:_____

Plant no:_____

Maintenance Interval:_____

Boiler Location:_____

Year of Construction:_____

Date	Inspection	Maintenance	Name Employee	Signature	Accept (Y/N)	Remarks

Inspection & Maintenance Record

Pressure Parts Record _____

Boiler Inspection:_____

Vogt Power Reference no:_____

Inspection Interval:_____

Plant no:_____

Maintenance Interval:_____

Boiler Location:_____

Year of Construction:_____

Date	Inspection	Maintenance	Inspection Location	Name Employee	Signature	Accept (Y/N)	Remarks

Maintenance Report

Report No.:_____

Site:_____

Prepared by:_____

Module:_____

Signature:_____

Unit:_____

Date:_____

Description of Failure

_____
_____
_____

Procedures Followed

_____
_____
_____
_____
_____
_____
_____
_____
_____

Results

_____
_____
_____
_____

Spare Used

Description	Serial no.

Equipment Failed

Description	Serial no.

Further Comments

_____
_____
_____
_____
_____

Preventive Maintenance Record

Record _____

Boiler Inspection:_____ Vogt Power Reference no:_____ Inspection Interval:_____

Plant no:_____ Maintenance Interval:_____

Boiler Location:_____ Year of Construction:_____

Date	Inspection	Maintenance	KKS-no.	Name Employee	Signature	Accept (Y/N)	Remarks

Warranty Claim Instructions: It is the policy of Vogt Power to resolve your warranty issue as fast as possible. In order to quickly communicate your warranty claim, please provide the following information and a description of the problem.

DATE: _____ VOGT POWER PROJECT NO.: _____WARRANTY CLAIM NO.: _____

CUSTOMER/OWNER CONTACT: _____

COMPANY: _____ UNIT NO.: _____

ADDRESS: _____

PHONE NO.: _____ FAX NO.: _____

EMAIL: _____

CLAIM DESCRIPTION (Include System, Component, Tag Numbers and Drawings):

_____
_____
_____
_____
_____
_____
_____
_____
_____
_____
_____
_____
_____

RETURN TO: Vogt Power International Aftermarket & Warranty Services
ADDRESS: 13551 Triton Park Blvd, Suite 2000, Louisville, KY 40223
ATTN: Nils Holmblad, VP of Aftermarket
EMAIL: Nholmblad@vogtpower.com
PHONE: (502) 899-4516
FACSIMILE: (502) 891-1960

1.0 PRELIMINARY FILLING AND FLUSHING

The following procedures apply to the high pressure evaporator and economizer; the intermediate pressure evaporator and economizer; the low pressure evaporator; and the feedwater heater or low pressure evaporator.

1.1 Fill all boiler systems with cold water (above 70℉ / 21℃) through the feedwater bypass lines for flushing. If cold water is not available, use boiler feedwater with extra care so as not to thermally shock the unit with hot water. USE CAUTION SO THAT NO ONE IS BURNED. The maximum temperature differential should be 50℉ (28℃) between the water and the metal of t he drum or economizer. Keep in mind that the water enters each module through the internal piping and the cold metal will not be exposed to the fresh hot water.

1.2 If a minimum of 100 psig / 6.9 bar (75 psig / 5.2 bar for the low pressure system) is available, flush the economizers by opening the drain valves until the water runs clear. Flushing is best done before drain lines are "hard piped" to a flash tank or drain pump. Repeat as often as required to clear headers and valves of construction dirt. Do not try to flush unless 100 psig (75 psig for the low pressure system) is available for the drain valves or debris may be trapped under the valve seat, causing the valve to leak.

1.3 During filling, vent the economizer(s) by opening the vent valves until all the trapped air or flashing steam is vented from the upper headers.

1.4 Flush the evaporators until the water runs clear from the bottom blowoff valves. Try to use an open drain that allows the boiler operator to check the water clarity as well as the valves for tight shutoff. Often a "free drain" is added to the blowdown piping for this purpose.

1.5 Continue to fill the boiler until water flows from the boiler drum vent. Close the drum vent when no additional air flows from this line.

When cold water is used, the complete "pressure unit" must be full before pressure builds on the system. Remember that with 80 ft. (24m) head, the pressure is about 35 psig (2.4 bar) at the lower drains without steam or air pressure.

1.6 Purge the air from the feedwater heater through the vent connections.

1.7 Flush the gauge glass and water columns valves until each runs clear and is free of air.

1.8 Flush out the boiler pressure gauge lines.

1.9 Flush out all instrument lines with the aid of the instrument engineer or technician.

1.10 Drop the level to normal and either chemically clean the unit or proceed with Operation.

2.0 HYDROSTATIC TEST

2.1. INTRODUCTION

2.1.1. This procedure provides guidance for conducting hydrostatic field tests of a Heat Recovery Steam Generator (HRSG).

2.1.2. An HRSG is composed of several pressure levels or sections of heating surfaces. These sections are designed, fabricated, and erected in accordance with ASME Code requirements found in Section I, VII, IX and/or B31.1, as applicable. Refer to P&ID drawings to determine the ASME Code jurisdictional boundaries.

2.1.3. Based on Code requirements, a field hydrostatic test is to be performed. During the test, the HRSG shall be inspected for leaks / failures by the erector's inspector and/or the VPI commissioning agent. The Owner may also provide a representative if so desired. Due to the design of HRSG's, multiple tests will be required. The appropriate sections of the HRSG shall be inspected at the time of each test. Refer to the Appendix for Design and Hydrostatic pressures.

2.2. PRETEST ACTIVITIES

2.2.1. The testing personnel shall develop a site plan which details how the test will be conducted. If there are any questions, Vogt Power International, applicable codes, and/or the AI shall be consulted.

2.2.2. Leaks at high pressure can cause serious injuries. The HRSG area should have temporary boundaries set-up to prevent access into test area. Adequate attention shall be given to provision of safety barriers, postings, notices, tags, flags, etc. for warning personnel during high pressure testing. Pressurized systems shall not be left unattended.

2.2.3. Manways and Handholes

2.2.3.1. All manways and handholes shall be opened and checked for cleanliness. Prior to closing for filling, these items shall be checked.

2.2.3.1.1. All loose material shall be removed.

2.2.3.1.2. All seating surfaces shall be inspected and repaired if required.

2.2.3.1.3. All gaskets shall be inspected and replaced as necessary.

2.2.3.1.4. When closing, inspect for proper clearances and alignment.

2.2.4. Pipe Supports

2.2.4.1. Variable and constant pipe supports shall have a hydro test pin installed per the manufacturer's instructions to prevent pipe movement during the hydrostatic test.

2.2.5. Instruments

2.2.5.1. Instrument sensing lines should be isolated (valved off), or disconnected when possible, to prevent foreign material from entering the instrument tubing.

2.2.5.2. All flow elements shall be removed.

2.2.6. Flanges

2.2.6.1. All flange connections shall be checked for proper bolting and gaskets.

2.2.7. Feedwater Pumps

2.2.7.1. Feedwater Pumps shall be isolated from the associated piping. Connections shall be blind flanged.

2.2.8. Valves

2.2.8.1. Safety valves with welded type bodies are supplied with a hydro test plug installed from the factory. Bolted style safety valves shall be blinded or pancaked to prevent lifting during over-pressurization. If pancakes are used, the handles shall be painted a bright color for good visual verification that they are installed for hydrostatic testing and removed prior to operation. Do not use safety valve gags during hydrostatic testing as their use may result in damage to stems and seats.

2.2.8.2. Check all valve alignments. All boundary valves shall be closed. All economizer, drum, and superheater vent valves shall be kept opened until all trapped air is removed.

2.2.8.3. All valves shall be tagged or marked for clear identification for operation during hydrostatic testing.

2.2.8.4. Attemperator valve shall be removed.

2.2.9. When possible, the test boundary should be extended to include the second vent and drain valves to minimize additional testing required by ASME/ANSI B31.1.

2.2.10. Each system physical configuration shall be reviewed to develop adequate fill/vent sequencing to assure all air is removed for hydro testing. System high points shall be vented sequentially. Sections left filled overnight, or for extended periods, shall be rechecked prior to testing

2.2.11. Walk down the entire system to verify that all equipment has been installed for the hydrostatic test. Failure to have all Code Equipment installed would/may require additional hydrostatic tests.

2.2.12. Hydrostatic test gauges shall be located at the top of the boiler when possible. When test configuration requires gauges to be located at the bottom of the HRSG, applied pressures shall take into account the effect of static head when determining the desired pressure. The gauge located at the pump operator station will also show higher pressure due to the static head.

2.2.13. The test apparatus shall have piping designed to the maximum hydrostatic pressure plus 6%.

2.3. Perform air leak test at 30 psig minimum. Do not exceed 75 psig.

2.4. FILLING

2.4.1. Water for hydrotesting shall be potable with less than 50 mg/liter (about 50 ppm) chloride ion content or as agreed upon by Vogt Power International. Metal and water temperatures shall be allowed to stabilize prior to testing. In no case shall water and metal test temperature be less than 70 degrees F (21 C). Water temperature shall be within 50 degrees F (30 C) of the module header and drum metal temperature to avoid shocking the unit.

2.4.2. Fill system with cold water (above 70℉ (21 ℃)). If cold water is not available, use boiler feedwater with extra care so as not to thermally shock the unit with hot water.

2.4.3. During filling, vent the economizer(s) by opening the vent valves until all the trapped air or flashing steam is vented from the upper headers of the low pressure and high pressure economizers.

2.4.4. Continue to fill the boiler until water flows from the highest vent. Close the vent when no additional air flows from this line.

2.4.5. As the heating sections and piping are being filled, all drain lines shall be bled to ensure that air is not trapped in these lines. The recommended minimum pressure for bleeding these lines is 25 psig (1.7 barg).

2.4.5.1. Sections which are filled and left over night shall be rechecked for air pockets prior to hydrostatic testing.

2.4.6. Some external piping is also equipped with vents. These vents shall also be bled similarly to the drain lines.

2.4.6.1. Piping which is filled and left over night shall be rechecked for air pockets prior to hydrostatic testing.

2.4.7. When cold water is used, the complete "pressure unit" must be full before pressure builds on the system. Remember that at 45 ft. (13.6 m) head, the pressure is about 33 psig (2.2 barg) at the lower drains without steam or air pressure.

2.4.8. After all HRSG Heating Surface sections and associated piping have been filled and all air has been purged/bled from the system, all code boundary valves shall be closed.

2.4.9. All handholes and manways shall be monitored during filling. If leaks occur and cannot be stopped by normal means, then filling shall be stopped and repairs made.

2.4.10. After all HRSG pressure parts have been filled and all air purged, a system walkdown shall be performed to verify the system boundaries and valve positions.

2.5. TEST PROCEDURE

2.5.1. The erector or testing personnel shall consult with the AI to determine minimum test parameters and have the agreement/concurrence prior to performing the test.

2.5.2. Testing shall be performed in accordance with ASME I PG-99 and ASME/ANSI B31.1, Chapter VI, Part 137, and witnessed by the Authorized Inspector. Pressure shall be applied gradually, and particular care shall be taken not to exceed the maximum pressures allowed. The rate of fill/pressurization shall be kept below the test apparatus relief capacity.

2.5.3. Drum manway bolts shall be monitored for re-tightening during the hydrostatic test to prevent leakage.

2.5.4. HRSG heating surface section under test shall not be left unattended.

2.5.5. The pressure shall be raised gradually to the hydrotest pressure of the section. The pressure may be increased by 100 psig per minute until the maximum allowable working pressure (MAWP) is reached and then by 25 psig per minute until the test pressure is reached.

2.5.6. The test pressure shall not be exceeded by more than 6%. In the event of exceeding this maximum, consult VPI Engineering for approval.

2.5.7. The hydrotest pressure shall be maintained for 30 minutes

2.5.8. The pressure may then be reduced by 25 psig per minute until the MAWP is reached.

2.6. INSPECTION

2.6.1. The test section shall be closely examined for leaks and/or deformation.

2.6.2. The test may conclude if no leaks, defects or pressure deviations are observed.

2.6.3. Any failures shall be recorded and tagged or repair. Repaired sections will require re-testing.

2.6.4. Upon successful test conclusion, a report will be prepared with the following information.

2.6.4.1. Job name and location

2.6.4.2. Job number

2.6.4.3. Test date

2.6.4.4. System tested

2.6.4.5. P&ID number

2.6.4.6. Applicable code

2.6.4.7. MAWP

2.6.4.8. Required test pressure

2.6.4.9. Actual test pressure

2.6.4.10. Ambient temperature

2.6.4.11. Test result

2.6.4.12. Reason for failure, if applicable

2.6.4.13. VPI (or erector) signoff and date

2.6.4.14. Owner signoff and date (as required)

2.7. SECURING FROM TEST

2.7.1. After completion of successful hydrostatic test, pressure shall be removed gradually from the system by opening vent valve(s). All temporary piping/hosing shall be removed.

2.7.2. After pressure reduction is completed, HRSG heating surface section shall be drained for lay-up, prepared for alkaline boil-out, or prepared for chemical cleaning.

2.7.3. HRSG sections can be gravity drained. To accelerate the draining process, oil free, hot air or nitrogen may be used. A centrifugal air compressor with the after-cooler bypassed may be used to supply the required air. If this type of compressor is unavailable, high pressure nitrogen source may be used.

3.0 ALKALINE BOILOUT

Alkaline boilout is used to remove oil, grease, and most protective coatings from tubes, headers, piping, and drum(s) prior to chemical cleaning or operation.

SUGGESTED PROCEDURE

3.1 Thoroughly mix the desired chemicals with the water while filling the unit through the economizer.

3.2 Slowly raise the temperature by any means available such as intermittently operating the gas turbine or steam heating of the chemical mix until the pressure is 25 to 50 psig (1.7 to 3.4 bar) in the boiler. To do this with steam, the stack must be tightly covered.

If steam is used, heat water externally and fill and drain until entire HRSG is equally heated. This is very time consuming because of the mass of steel that must be heated to approximately 240℉ ±10℉ (1 15.5℃ ±6℃), plus the internal air space and casing, etc.

3.3 Maintain pressure for up to 48 hours. Set the continuous blowdown at 25% open. During this time, open the economizer drain valves in sequence with the blowdown valves.

3.3.1 Boil Out/Flush Out of Economizer

Install a circulating pump to remove water from the lower or bottom blowdown line and re-inject it into the economizer inlet to clean headers and tubes. This circulation should continue for three (3) or four (4) hours at maximum pressure and temperature per Section 3.2. The pump should have seals good for use with the cleaning solution at minimum conditions of 300℉ (148.8℃) and 100 psig (6.9 bar). About t hree (3) to five (5) gallons (18.925 liters) per minute is a good size but a larger pump can be used (double this capacity for double width lines).

After circulation is complete, stop the pump, valve it off, and remove it from the system.

3.3.2 Open each economizer drain valve for approximately 10 seconds every 4 hours. Close valve firmly, but <u>do not force it closed</u>. Stop operation if valve is difficult to close. If so, reopen and blow again until valve is

flushed free of dirt and buckshot. While open, sharply (but carefully!) tap the valve body with a mallet to aid in loosening debris from valve body.

3.3.3 Open the regular bottom blowdown valves for 5 to 10 seconds maximum in four hour intervals. Add boiler feedwater as required to maintain drum levels to ±8" (203mm) of normal water level or within the visible range of the gauge glass.

When operating the bottom blowdown valves, open the upstream valve (valve closest to the boiler) first and close it last. This protects the inside valves seats from excessive wear.

About every four (4) hours, the drum level should be raised above the top of the gauge glass to clean the top of the steam drum. After a 10 minute soak, use the bottom blowdown valves to lower the level to within the sight glass.

3.3.4 Check the continuous blowdown (CBD) sample at least every two hours for total solids or alkalinity. Flush the CBD line by opening the control valve full and then re-setting it to 25 percent prior to taking the sample. Allow the sample to cool to 200 ℉ (93 ℃) or below before analyzing. When total dissolved solids (TDS) drops to normal boiler water levels or below, boilout may be considered finished. See Section 1 Tab 8 for limits. Plot a curve of TDS versus time to aid in predicting completion.

3.3.5 The chemicals used should be as recommended by the water consultant. If commercial chemicals are not available, the following blend may be used to clean the unit:

<u>Per Each 1000 lbs. or per each 1000 Kg of water:</u>

3 lbs.	3 Kg.	Sodium Hydroxide (Caustic Soda) (Na OH)
3 lbs.	3 Kg.	Di-Sodium Phosphate (Na2 NP04) or Tri-Sodium Phosphate (Na3 PO4)
1 lb.	3 Kg.	Sodium Nitrate (Na NO3)
1 oz.	60 g.	Vel or equal detergent, or as a substitute for the detergents, use the following, <u>but not both.</u>

1 lb. 1 Kg. Of a short chain anionic polymer that is stable to approximately 425 ℉ (218 ℃)

3.4 PRECAUTIONS

3.4.1 Install temporary heavy duty glass in the drum level gauges (provided for initial commissioning) to protect regular glass from chemical damage.

3.4.2 Isolate any valves or instruments that the boil-out chemicals might damage (refer to vendor O&M manuals in Section IV).

3.4.3 Protective clothing should be worn while handling these chemicals. Eye protection is most important, but do not neglect rubber gloves, rain coat, and boots.

3.4.4 The chemicals should not be added to the boiler until boil-out is ready to begin. Drain and flush if chemicals have been added and the start of the "boil-out" is delayed over twenty-four (24) hours.

3.4.5 The superheater outlet must be vented to pass steam through all the modules for protection of superheater tubes. Drum vents should be closed at 15 psig (1 barg) or as soon as all air has been exhausted from the drums.

3.4.6 Drain and flush at least four times when the boil-out is completed. Leave the last dose of flush water in the unit and allow it to cool before making a complete inspection.

4.0 CHEMICAL CLEANING

The need for chemical cleaning a new or previously operated Vogt Power "HRSG" can only be determined by the system requirements. If it is desired to completely clear the entire system of magnetic oxides or remove calcium based scale, chemical cleaning is the best option. When an operating boiler has been fed unsatisfactory boiler feedwater, it may be necessary to chemically clean to remove scale deposits.

Vogt Power does not require chemical cleaning of newly installed equipment. If it is performed, it should be done by a reputable boiler cleaning contractor with knowledge of this particular type of boiler. Vogt Power will review cleaning procedures and offer comments upon request, but Vogt Power cannot take responsibility for the cleaning operation.

The following is offered as a guide only to aid in developing a safe and effective cleaning procedure.

4.1 PREPARATORY OPERATIONS

(If an alkaline boil-out has been performed, skip Section 4.1.1).

4.1.1 Clean all loose debris from the steam drum and cap any lines which lead to instruments that could be damaged by chemical cleaning. Place new gaskets on the manway covers.

4.1.2 Remove all floats, probes, and equipment that could be attacked by the cleaning solution, or, if impractical, cap them all from within the drum.

NOTE: Stainless steel components are subject to chloride attack. Hydrochloric acid solutions, even with inhibitors, should not be used.

4.1.4 Clean all debris from the lower circulating headers. Install new gaskets and close the lower header handholes.

4.1.5 Remove the regular gauge glasses and replace with plain, heavy duty disposable glasses for chemical cleaning. If there are no plain glasses available, replace the regular glasses complete with all gaskets and mica when cleaning is completed.

4.1.6 Blind off and bypass the feedwater control valve to avoid valve body or trim damage by cleaning solutions.

4.1.7 Attach the chemical cleaning lines to the chemical drain or regular drain valves as required by the consultant's procedure.

4.1.8 Fill the boiler with water and check the water side system for tightness. Close gas side access doors.

4.1.9 Before any chemical cleaning solution can work efficiently, the boiler(s), economizer(s), and superheater(s) must all be at an elevated temperature, usually about 180℉ (82℃). If the system has just been through the alkaline boil-out procedure, the stacks and ducts can be sealed off to prevent cooling. The unit will then be ready for chemical cleaning as soon as all drains are routed into the chemical cleaning equipment.

4.1.10 If the boiler system has <u>not</u> been through the alkaline boilout as detailed in Tab 3 and 4.1.9, fill the boiler(s) through the economizer(s) with treated boiler feedwater and heat with the gas turbine exhaust. This heating should be continued until at least 15 to 25 psig (1 to 1.7 barg) steam is venting from the superheater vent valve(s). As the unit builds pressure flush out all economizer and superheater drain valves to remove buckshot and construction debris. The removal will not be as complete as with an alkaline boil-out because of the lack of detergency to break the surface tension of the construction debris. With extreme care, most of the loose material can be purged from the valves. The hot water drained from the boiler may be used by the chemical cleaning contractor to mix the chemicals. Use extreme caution while draining as some flashing will occur.

4.2 FILLING THE HRSG WITH CLEANING SOLUTION

<u>WHILE ACID IS IN THE BOILER, NO WELDING MAY TAKE PLACE ON ANY BOILER COMPONENTS OR PIPING.</u> Extreme corrosion has occurred when welding on metal containing acid. All construction around the unit must cease until all acid is removed and/or neutralized.

4.2.1 All chemicals must be mixed with both the inhibitor and water in tanks external to the boiler before pumping into the feedwater line. "In Line" mixing of acid and inhibitor will not be acceptable, unless diverted into a holding tank for complete blending before introduction into the boiler(s).

4.2.2 Introduce the initial cleaning solvent through the feedwater header. As the solution passes through the economizer modules each vent valve should be opened to vent air and gas as each "pass" is filling. Use care in venting to

protect equipment and personnel from chemicals (vent via hoses into holding tanks).

4.2.3 Continue to add solution until the cleaning solvent appears in the gauge glass. Continue as high in the drum as desired. Normally, there is nothing in the drum that a properly inhibited chemical solution will attack. Consequently the top vent line could be used for circulation through the drum. Use a hose to vent to a safe location such as a holding tank.

4.2.4 When the unit is filled to the desired level, the solvent should be left standing as long as required for 50% of the cleaning to take place.

4.2.5 During this time, fill the superheater modules with a suitable cleaning solution through the lower connections. Each superheater pass should be filled from the bottom upward to and through the vents.

4.3 CIRCULATING SOLVENT BY DRAIN and FILL METHOD

Due to the basic design of the module steam generator, it is impractical to clean the unit by use of a circulating pump. In order to clean all modules and drum(s) of the boiler and superheater, the system must be "filled and drained." Generally “clean by pumping“ methods will clean only the economizer modules and the downcomer pipes. However, there are pumping and circulating options that can be effective if the downcomers are blocked properly to force flow through the evaporator sections.

If in doubt, have the contractor call Vogt Power and talk to the office of the Chief Engineer.

4.3.1 When sufficient time has elapsed to expect 50 percent of the cleaning to be finished, the cleaning solution should be dropped rapidly out of the unit into a holding tank, then tested for cleaning strength. Cleaning solution may be forced out by nitrogen pressure or may be pumped. Nitrogen (N_2) should be used to force the solution from the drains. Tests of solvents and dissolved deposit constituents should be according to ASTM Standard Method D-2790. For insoluble matter, ASTM Standard Method D-2332 should be followed.

4.3.2 Repeat the filling and draining operation in both the boiler section(s) and the superheater section(s) returning the solvent to full strength as required and adding external heat by a heat exchanger or by a direct steam sparger in the solvent circuit. For an HRSG superheater-boiler-economizer combination, there is no circulation possible during chemical cleaning except through the

economizer, down the main downcomer and out the drain chemical cleaning connection or blowdown.

It is necessary to circulate the cleaning solution by draining (to remove the solution) and by refilling (to recontact the surface). Filling through the economizer will automatically introduce chemical to this section with some velocity; however, filling and draining, even in the economizer section, is the only method to be 100 percent sure of changing the chemicals contacting the internal surfaces.

Note: It may be possible to force increased circulation through the evaporator section by blocking a percentage of the downcomer opening in the steam drum. This will force more flow into the rows of evaporator tubes.

4.4 NEUTRALIZING

After the cleaning is thought to be completed to the satisfaction of all concerned, drain and flush the unit with the neutralizing solution followed by water rinses. Continue to apply the "fill and drain" method of contacting all of the surfaces. After an inspection to insure that the cleaning is satisfactory by checking the lower header(s) and exposed drum portions, the unit should be passivated if storage is to be over 72 hours. The success of chemical cleaning is dependent upon the care with which the introduction of the solvent is made and the testing of the finished or spent solvent. There are two cleaning solutions that have been found excellent for rust removal.

4.4.1 The Citro-Solv method as used by Haliburton Services will clean the rust by solution in the citric acid (with either Rodine 31A or OSII at the rate of 1/2 gallon per 1000 gallons as the inhibitor). Ammonia is used to neutralize the citric acid. This reduces the disposal problem as only one solution remains.

4.4.2 More expensive but excellent for rust removal is a carefully controlled chelant soaking. This too, must be filled and drained but it has proven to do an excellent job.

4.4.3 Remove the stack cover when cleaning is completed, to aid in cooling.

4.5 INTERNAL INSPECTION

If desired, the upper and lower module headers can be examined through the risers or feeders with a boroscope to determine the effectiveness of the cleaning.

5.0 STEAM BLOW CLEANING

The purpose of steam blow cleaning is to remove weld-bead deposits, pipe slag, iron oxides, and other foreign material from power piping and the Heat Recover Steam Generator (HRSG) superheater surfaces to minimize the possibility of process equipment or steam turbine damage. Particles carried by steam into process equipment or steam turbines will affect and damage the steam path through wear.

Techniques for cleaning steam piping for a variety of process equipment and steam turbines furnished with combined cycle plants are covered. The Purchaser should apply only those guidelines and procedures which are applicable to the specific equipment. This development of the plants steam blow procedure should be governed by the following three issues.

5.1 OBJECT

Each facility performs the necessary number of steam blows until a source of clean steam (that is, a clean system) is obtained. A steam blow consists of heating and blowing steam through, and cooling the related piping. The inherent design of the process equipment or steam turbine allows steam to be supplied from the HRSG with the incorporation of temporary piping, materials, and silencer to satisfy steam blow operations.

5.2 EFFECTIVENESS

The effectiveness of steam blow cleaning is determined by observing a polished target located in the temporary piping. Solid particles carried by the steam impact the target and produce pits in its surface. The target is then analyzed by visual observation, in which the amount and size of all pits are determined. A decision is finally made with regard to the line being *adequately* clean, thereby signifying the termination of the particular steam blow.

5.3 TARGET ACCEPTANCE CRITERIA

A mutually agreed steam blow cleaning target acceptance criteria must be developed by the process equipment or steam turbine supplier, Vogt Power, Inc., and the owner as a minimum. The criteria shall establish the type of target, target cleanliness, and target location.

Typically, steam turbine manufacturers have the most stringent acceptance criteria while Vogt Power's criteria is based on the minimum cleaning required to prevent

damage to pressure parts. The owner must balance these two inputs to achieve the life expectancy for the facility.

5.4 MAIN STEAM PIPING

The most satisfactory method of cleaning the steam piping is by means of a heating-cooling and steam blowing cycle. Pressure is built up in the HRSG and main steam header and then released through the temporary piping. The lines cool while the steam pressure is being built up again. The cyclical heating, cooling, and blowing is repeated until the steam emerging from the steam blow piping is observed to be clean. Limiting the cleaning operation to a specific number of blowing cycles, or until the steam blow appears clean, may not always result in adequately clean piping.

The characteristics of HRSGs necessitate some change in cleaning methods as opposed to the acceptable methods used on conventional power boilers. Usually it is not possible for one HRSG, on a typical multi HRSG application, to furnish sufficient steam during a steam blow to obtain the force or cleaning ratio of one for cleaning of the main steam header piping. This prevents utilizing the conventional power boiler sequence of: fire to steam blow pressure, open steam blow valve and allow the pressure to decay to a minimum pressure level, close steam blow valve and repeat process. In addition, the volume of water stored in the HRSG evaporator section and the drum is less than the volume stored in the conventional power boiler and the same generating capacity. Allowing for these differences some combination of the following design and cleaning methods should be given consideration by the Purchaser.

5.4.1 Joint design of field welds should use first pass TIG consumable inserts.

5.4.2 Chemical cleaning of the heat recovery steam generators, the main steam header piping including steam turbine bypass piping prior to cleaning either by mechanical means, steam blow or by a gas steam blow.

5.4.3 Steam generated steam in the HRSG(s) occurs in the unfired mode utilizing the storage capacity as necessary from the deaerator and condenser hotwell to replenish boiler water spent in steam blow.

5.4.4 Gas blow cleaning of combined cycle equipment is restricted to the main steam header piping.

5.4.5 After the completion of any combination of the above, steam turbine operation with a fine mesh screen installed for a prescribed period of time beginning with turbine testing and ending sometime after steam turbine goes into commercial operation.

5.5 STEAM BLOW CONSIDERATIONS

For an effective steam blow, the HRSGs will be operated in the unfired mode. The auxiliary firing capabilities on fired heat recovery boiler applications will not be used during steam blow. The Purchaser shall determine from the plant arrangement what order to select for the steam blow of the HRSGs and the main steam lines.

Generally, the HRSGs are blown separately followed by the combined steam main steam header through the steam process equipment or turbine bypass piping and, finally, a steam blow of the main steam header through the process equipment or steam turbine stop valve(s). If there are two main stop valves, the Purchaser can select to steam blow both valves simultaneously, one valve at one time whichever is most economical, convenient and practical.

The Purchaser should make up or order from the valve supplier the cover plates, one for each main stop valve, to replace the normal stop valve covers. These temporary plates must be designed heavy enough and machined adequately to maintain the desired steam blow pressure without leakage. Pertinent dimensions of the permanent covers will be sent to the Purchaser as a reference for making up temporary plates. If the Purchaser wishes to steam blow one valve at time, he may then use the same plate and pipe for the second stop valve. In this case, the stop valve not being blown through should be covered with its permanent cover. The chemical cleaning fixture should be installed in the turbine stop valve during steam blow to prevent particles from depositing adjacent to the valve seat and plug.

Pressure readings during steam blow should be taken upstream of the boiler stop valves and as close as possible to the steam blow pipe discharge. The latter connection should be made at a convenient location not less than twenty diameters from the discharge end of the blow pipe in order to obtain a stable pressure reading. These readings will help substantiate the calculated steam generator pressure and pipe sizes selected for the steam blow operation.

The number of polished targets required to ascertain that the steam piping is adequately clean will vary dependent on the interpretation of the targets taken from the previous blows.

Following the initial three or four blows for each particular pipe run, when the steam appears to be clean by visual observation, a polished target should then be inserted in the blowpipe discharge for each subsequent blow. The targets can be made of steel, aluminum or copper strips, polished on four sides to obtain use from each.

Adequate communication must be established and maintained between the combustion turbine operation, HRSG operation, and the temporary steam blow valve operation. This might be backed up by a system of visual communication, such as indicating lights, since phone communication may become difficult due to high noise level at the steam blow valve. An arrangement should also be made to record pressure readings at various stations simultaneously through proper communications.

Sufficient reserve feedwater should be available in the deaerator storage tank, condenser hotwell, and reserve feedwater tanks for the steam blow. The Purchaser should provide sufficient time in the steam blow schedule to perform a satisfactory steam blow.

The following equipment and steam piping should be chemically cleaned and steam blown prior to undertaking plant startup testing.

5.5.1 Each HRSG and its steam lines.

5.5.2 The main steam lines and header from each HRSG through to the process equipment or turbine bypass piping just upstream of the turbine bypass desuperheater valve. The process equipment or turbine bypass desuperheater valve must not be in the steam path during steam blow.
The Purchaser shall supply temporary piping including a steam blow valve to be connected at a point just upstream of the turbine bypass desuperheater valve.

5.5.3 The main steam lines and header through to the process equipment or turbine stop valve(s).

5.5.4 The steam seal piping. No acid cleaning of seal steam piping recommended.

The Purchaser shall furnish the temporary piping and the steam blow valve(s). The Purchaser shall determine the arrangement and sizing of the temporary steam blow pipe as well as the type and number of steam blow valve(s) to be used. The steam blow pressure will be built up in the steam piping and released by the operation of the steam blow valve(s). The steam blow valve(s) shall have valve position jogging capabilities.

Several steam generator factors should be considered when steam blow cleaning down HRSGs. These include feedwater quality, drum thermal stresses, and steam generator design application.

Since the steam blow takes place during the initial operation of the plant, design deaeration levels of the feedwater may not be possible. The Purchaser should recognize that there is a risk of corrosion, especially in the economizer tubes, if normal feedwater oxygen levels are not maintained. To correct this situation, catalyzed hydrazine or other oxygen scavenging chemicals may be used during steam blow. This is essential, especially if the steam blow is to take place on a semi-continuous basis.

Steam drum/header thermal stress is potentially highest during the period water is flashing to steam during steam blow. A measure of this stress is the time rate of change of drum/header pressure which can be converted back through saturation temperatures to temperature rate. See the Start Up Procedure in Section I Tab 5 for the allowable pressure/temperature change in the drum/header versus drum/header pressure for the specific application. These curves will take into consideration parameters such as drum/header diameter, wall thickness, steady state stress, and relate this to pressure rise rate.

Due to the rapid decrease in saturation temperature in the HP Drum/Steam Header, relative to pressure below approximately 250 psig (17.2 barg), it is usual to terminate steam blow sequence before this pressure is reached.

The relative volume of evaporator and drum water space is considerably smaller in a heat recovery steam generator relative to that of a modern power boiler of the same steaming capacity. This difference usually necessitates a change in steam blow procedure than that associated with power boilers in order to obtain equivalent blowing times. Due to the inability of obtaining a significant blow time and remain within the drum stress limits, a semi-continuous process is described. Here steam is generated on a continuous basis at lower than rated pressure but slightly greater than rated flow with only a limited amount of flashing taking place. The chief consideration in this method is makeup capability. Usually the hotwell and/or deaerator storage will allow for a 5 to 7 minute blow.

In a heat HRSG steam blow, it must be recognized that the blown steam will have significant superheat. Any temporary piping installed for the blow should be designed for the expected temperature and pressure. Also, the superheater tube velocity should be limited to approximately double the design operating velocity.

When calculating the cleaning force ratios on heat recovery steam generators, it should be remembered that ambient temperature will have a significant affect on steam generation due to the combustion turbine exhaust gas flow characteristic. Highest flows occur at the lowest ambient temperature. The aspect of variable pressure operation may indicate that the best cleaning forces for a steam generator occur under different conditions than those optimum for a steam turbine, i.e.; steam generator steam flow

peaks while operating in the low pressure region (part load mode) and steam turbine peaks at its maximum load point.

For combined cycle units with multiple HRSGs supplying steam to a single turbine, it is unlikely that a single steam generator will be able to produce enough steam to reach a force ratio of one for the main steam header. In such cases, steam blow of the header with simultaneous operation of steam generators, gas blow of the main header, or mechanical cleaning of the header, after individual steam generator blows should be given serious consideration.

5.6 STEAM BLOW PRELIMINARY PREPARATIONS

The Purchaser should size and provide the temporary piping required for the steam blow. This blow piping must be large enough to develop a mass-velocity head in the permanent piping at lest equal to that developed during full-load operation. The size of the temporary piping is usually 8" to 14" (203-356 mm) in nominal diameter when blowing with a boiler pressure of 600 psig (41.4 barg) superheated steam.

Since the force on a particle is proportional to the mass-velocity head of the fluid, it appears reasonable that the mass-velocity head developed during the blowing cycle must be equal to that developed during full-load operation. This should take care of most loose pieces, although the time factor is involved and no one can be sure how long it takes pipe scale to loosen up, or such things as pieces of welding rod to work their way through the pipe lines, superheater and main steam lines.

Calculations can be made to show how much flow and what drum pressure is necessary for an assumed temporary pipe size to get a mass-velocity head during cleaning equal to that attained during full-load operation, based on the following.

5.6.1 As a first attempt, assume that the velocity at the pipe exit to atmosphere during steam blow is sonic, and that the pressure, P_p, just inside the pipe at the exit is 30 psia (2.07 bara). To make this assumption, it is necessary that all flow areas in the system be equal to or larger than the discharge area.

5.6.2 Estimate the steam conditions (pressure, enthalpy) at the boiler outlet expected during steam steam blow. From the curves on Figure 1, read the mass flow function, F_{30}. Calculate the mass flow, Q_c, as follows:

$$Q_c = F_{30} \times A_p$$

where A_p = area of pipe at discharge (in.^{2})

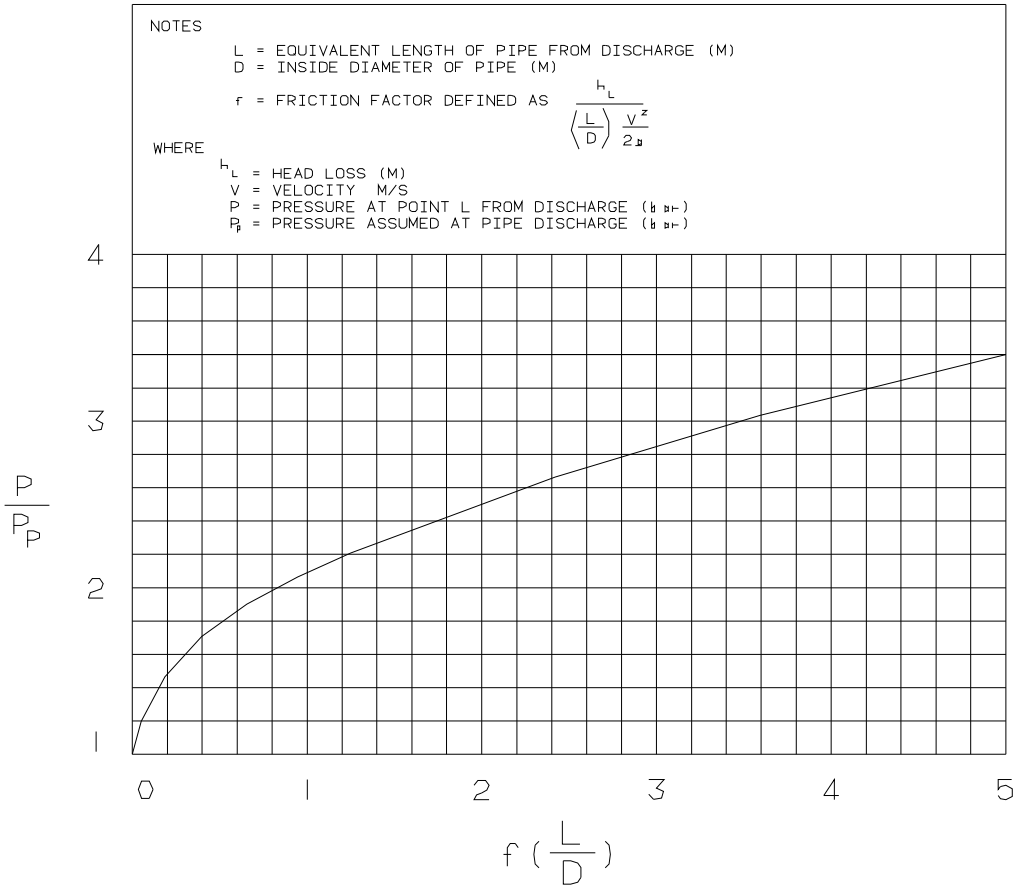

FIGURE 1

5.6.3 It is necessary to calculate the pressure drop through the temporary and permanent piping to arrive at an HRSG drum pressure curve. This curve should be used in determining the pressure drop near the discharge end of the temporary piping since the velocity is near sonic and ordinary calculation of pressure drop due to friction does not apply. In applying this curve, assume as a first trial and L is the total equivalent length to the temporary piping including the equivalent length of elbows, tees., etc., in the temporary system. Calculate the fL/D and enter the curve and thus calculate P, the

pressure at the distance L from the exit. Note that if fL/D of the temporary pipe is ore than 5, use a shorter L which will make fL/D equal 5 and use corresponding P/Pp to calculate P at the shorter L. Where fL/D is greater than 5, the pressure drop is a straight line function of L and can be calculated by conventional method. Then calculate by conventional straight line methods the pressure drop due to friction in the piping from the point L from the exit to the boiler outlet, thus arriving at the boiler outlet pressure Pc.

5.6.4 Calculate the cleaning force ratio at the HRSG outlet using calculated Pc and expected enthalpy. This ratio compares the mass velocity head during cleaning with that during cleaning with that developed during normal full-load operation. The cleaning force ratio is expressed by:

$$R = \left\{ \frac{(Q_c)}{(Q_{max})} \right\}^2 \times \frac{V_c}{V_{max}}$$

where:

Q_c = calculated flow during cleaning (lb/h)

Q_{max} = max load flow (lb/h)

V_c = specific volume at Pc (ft^3/lb)

P_c = pressure during cleaning at boiler outlet (psia)

V_{max} = specific volume at Pmax (ft^3/lb)

P_{max} = pressure at maximum load flow at boiler outlet (psia)

5.6.5 If this ratio R is less than one and the steam velocity in the superheater tubes is less than twice the allowable, divide the pressure assumed inside pipe (Pp) by this ratio and repeat the above process; thus, the required flow and pressures for equivalent cleaning forces can be determined, establishing the required sizes for the temporary blowpipes. Note that for a discharge pressure different than 30 psia (2.07 bara), the flow function is:

$$Fp = F_{30} \times (Pp/30)$$

The size of the temporary pipe is a most important factor. The use of a larger pipe will result in lesser flows and lesser pressure levels required for the same cleaning force. The size effect is proportional to the ratio of diameters to the fourth power. In no case, however, should the temporary pipe have greater flow area than the permanent piping.

5.6.6 If the ratio R cannot be adjusted to meet a ratio of unity without exceeding twice the allowable steam velocity in the superheater tubes, then the boiler pressure to be used during steam blow can be selected as follows:

Determine the steam generator pressure equivalent to the point where the steam velocity in the superheater tubes is equivalent to twice the allowable, subtract a nominal pressure of 50 psi (3.45 bar) and round off to the next lower practical boiler pressure setting.

For example, if the HRSG pressure calculates to be 683 psi (47.1 bar) for the point where the steam velocity reaches 600 ft/s (183 m/s) then:

683 psi - 50 psi = 633 psi
47.1 bar – 3.45 bar = 43.7 bar

The next lower practical steam generator pressure can be selected either as 600 psi (41.4 bar) or 625 psi (4.31 MPa) and be used as the steam blow release pressure.

5.7 HRSG AND MAIN STEAM LINES STEAM BLOW

5.7.1 Suggested preparations to be made prior to undertaking a steam blow are given as guidance information and the assumption that the process equipment or steam turbine unit has one main stop valve:

5.7.1.1 Check to ensure that the main stop vale is closed tightly.

5.7.1.2 Remove the permanent head and the steam strainer from the main stop valve. It is necessary to plug the pilot passages of the valve during steam blow to keep foreign material out of the assembly. These protective devices should be installed for steam blow and must be removed before starting the process equipment or steam turbine.

5.7.1.3 Install a temporary steam blow cover on the main stop valve. A new gasket is not required. Install the temporary piping to the top

of this plate and run blowpipe out of building to a safe area. A steam blow valve should be installed at some convenient place in the temporary piping.

5.7.1.4 Secure all permanent and temporary piping properly with sufficient flexibility for thermal expansion. Make provisions for taking pressure readings and for adequate communication between plant control.

5.7.1.5 Remove the attemperator nozzle, if applicable, and install a blind flange.

5.7.1.6 Close isolation valves on steam header instrumentation such as pressure transmitters, gauge lines, etc. This will eliminate pockets for foreign matter to collect. Sensing lines necessary for controls used during steam blow must be left open.

5.7.1.7 Hotwell and deaerator level controls as well as boiler feedpump-recirculation controls should be checked out and operational.

5.7.1.8 HRSG drum level controls should be checked out and operational.

5.7.1.9 HRSG pressure and temperature instrumentation as well as damper and motor operated valve controls should be checked out and operational.

5.7.1.10 Steam turbine condenser circulating system should be checked out and operational.

5.7.1.11 The temporary steam blow valve should be power actuated and be able to operate as a control valve with valve position jogging capabilities.

5.7.2 The procedure for blowing down one HRSG is suggested as follows:

5.7.2.1 Fill condenser hotwell and deaerator storage tank to maximum level with feedwater quality water.

5.7.2.2 Start combustion turbine and bring to load point (probably low load for first blow, base load for subsequent blows).

5.7.2.3 Warm up HRSG by admitting small quantities of exhaust gas. Vents, drains, and circulating system are to be operated per instruction book.

5.7.2.4 When pressure is adequate to close HRSG vents, start admitting small quantities of steam to main header to start its warm up.

5.7.2.5 Bring combustion turbine to base load and continue warming main header until it is above saturation temperature for the steam blow pressure. Combustion Turbine exhaust gas flow can be adjusted, vent, drain, and steam blow valve(s) to bring drum pressure to the desired level.

5.7.2.6 When the required HRSG warm up pressure is reached in drum and the header is determined, final build up to steam blow can start by adjusting HRSG gas flow from the CT. Pressure should be held near the calculated steam blow pressure by adjusting the blowdown control valve. Drum water level should be maintained near its high alarm point.

5.7.2.7 After reaching steady state, continue opening the steam blow control valve to allow drum pressure decrease at the allowable rate.

5.7.2.8 To terminate a steam blow, interrupt the CT exhaust gas flow to the HRSG and maintain steam pressure by adjusting the steam blow control valves.

5.7.2.9 The operator should be aware of water levels in the hotwell and deaerator during the blow and remember that some feedwater will be needed during the idle period between blows.

5.7.2.10 After a steam blow is terminated, a small flow of steam will keep the header warm until hotwell and deaerator levels are brought back to starting water levels. The combustion turbine could remain at base load or be adjusted to suit system requirements. The steam blow valve can be throttled to hold the desired HRSG hold pressure during this period.

5.7.2.11 The above steps should be repeated for each HRSG until each unit accomplishes successful steam blow. Then a combined steam blow should be undertaken to clean the main steam header piping

including the process equipment or steam turbine bypass steam piping up to but not through the desuperheating-reducing valve.

5.8 PREPARATORY OPERATIONS

5.8.1 The necessary blanking fixtures, temporary steam blow valve, and temporary piping must be properly sized, installed, and anchored. In addition, calculations must be performed in conjunction with the determined temporary pipe size to allow the mass-velocity developed in the permanent piping to be at least equal to the mass-velocity developed during normal full-load operation.

5.8.2 The calculations allow the corresponding flow and pressure leaving the HRSG to be determined as well as the pressure drop through the temporary and permanent piping. Also, they ensure that particles are carried to and impact the polished target. The appearance of the target will then be representative of an effective steam blow (because, according to Newton's Second Law, the force on a particle is proportional to the mass-velocity) and allow an accurate determination of line cleanliness to be made.

5.8.3 A procedure outlining how the steam blows will be conducted must be developed and reviewed with all involved personnel. It is important that this procedure incorporate all related equipment interfaces, safety precautions, and *steam-blow target-acceptance criteria*. In addition, a summary of the calculated system pressures for each phase of the steam-blowing operation must be included to allow these pressures to be used during the actual operation.

5.8.4 Finally, a sufficient quantity of targets with opposing sides polished to obtain multiple uses must be available. Target material is normally steel, but aluminum or copper may be used.

5.9 ACCEPTANCE CRITERIA

5.9.1 As stated in available literature, primarily from steam turbine manufacturers, a system has been adequately cleaned when a polished target inserted in the blowpipe discharge shows no pitting.

5.9.2 The initial machined targets should not be inserted until 3 to 4 blows have been completed and the steam appears to be clean by visually observing the steam as it exits the temporary discharge pipe. At first, the steam will appear

to be an orange-rust color due to the removal of ferric oxide (Fe_2O_3) from the system. After improvement, a polished target should be installed for each subsequent blow until no pitting exists.

5.9.3 The following drawbacks may exist while attempting to obtain a target that has no pitting, a condition defined as a completely smooth target with the exception of slight discoloration due to heat or water/steam chemistry.

5.9.3.1 If for some reason the temporary pipe has been sized incorrectly or the available steam pressure is inadequate, the overall effectiveness of the steam-blowing operation will be poor. This being the case, the attainment of a completely smooth target may not be indicative of a clean system, as the following shows. Knowing the force on a particle is proportional to the mass-velocity, the pit established by particle M_2 will be much smaller than that developed by particle M_1 and will possibly be nonexistent. Thus, a line cleaned with less than full-load mass-velocity will exhibit an acceptable target that is not representative of a truly clean system.

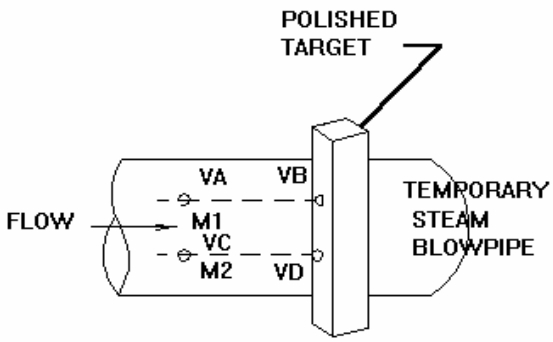

5.9.3.2 The duration of each phase of the steam-blow operation (main steam, cold reheat, and hot reheat) may become excessive and be detrimental to the overall plant startup schedule. Also, the wear

and tear on certain pieces of equipment, which may not receive this type of service normally, will reduce overall plant availability.

5.9.3.3 Realizing that the time required to loosen scale and to move weld beads and other foreign matter through the system is basically indeterminate, the chances of obtaining consecutively clean, smooth targets without an excessive number of blows is not good.

5.9.4 As explained earlier, the key to a successful steam-blowing operation is to obtain the same mass-velocity in the permanent piping that is achieved during normal full-load operation. If this is the case, and knowing that the force on a particle is proportional to the mass-velocity, then a clean, smooth target will be representative and guarantee that the system is clean. This leads us to conclude the following:

5.9.4.1 The mass-velocity developed during the actual steam-blowing operation should be verified to be correct by recording system pressures at the inlet to the process equipment or turbine stop valves and at the discharge of the temporary steam blow pipe. If these pressure, when compared with the original calculated pressures, are in agreement, they will indicate that the proper boiler pressure and temporary pipe size are being used, thus confirming that the permanent piping is being cleaned at its normal full-load mass-velocity.

5.9.4.2 Knowing that the mass-velocity is correct, an interpretation of the target can be performed that will ensure a clean system has been obtained.

5.9.4.3 Realizing that the overall goal is to minimize the wearing effect on the steam path of the process equipment or steam turbine, which can be caused by the large coarse particles as well as small fine particles, it is now practical to have the maximum amount of these particles removed knowing that the mass-velocity is correct.

5.10 Target Appearance

5.10.1 The quantity and type of all pits--raised and unraised must be carefully analyzed concerning overall size and whether or not the force of impact along with the particle's sectional pressure has caused the metal surrounding the pit to raise above the target surface. Sectional pressure is

found by dividing the weight of a particle by its maximum cross-sectional area.

5.10.2 In general, the target must be clean with the exception of possible discoloration. Acceptable discoloration should only be a result of heat (for example, heat being applied to cold-rolled steel) and not because of black iron oxide carried in the steam.

5.11 Allowable Pits.

5.11.1 Specifically realizing that the exposed surface of the target consumes only a fraction of the cross-sectional area of the temporary pipe, *the number of unraised pits allowed will be five or fewer.* Furthermore, absolutely no pits resulting from the raising of metal above the target surface are permitted. Realizing that turbulent flow will exist, the *unraised pits* will be restricted to an area on the target that experiences greater than average velocity. The following figure clarifies this point and establishes these boundaries.

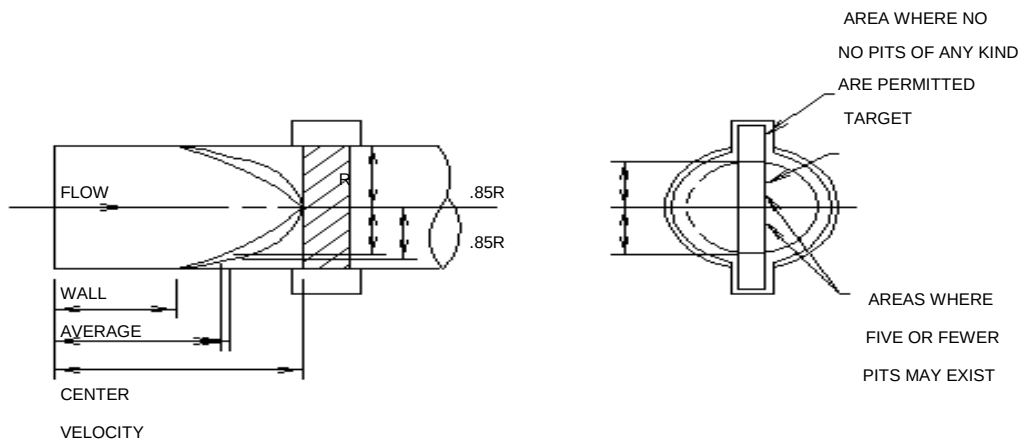

5.11.2 Finally, a total of *five consecutive targets with fewer than five unraised pits per target* must be obtained to conclude that no additional cleaning will be accomplished by continuing the steam-blowing process. This comparison will consist by collecting *three consecutive targets*, allowing the permanent piping and steam generator to cool for 24 hours, reheating and finally

collecting *two consecutive targets.* If any of these targets exceeds the pitting criteria, further steam blows must be performed to obtain the correct number of acceptable targets in the specified sequence.

5.11.3 By adapting the acceptance criteria, once a valid comparison has proved that the actual-vs.-calculated-system pressures are alike, the assurance that the system has been effectively cleaned is high. Also, the overall duration of the steam-blowing will be realistic.

6.0. COMMISSIONING

6.1 If not previously completed, inspect the entire unit, consisting of gas ducts, access lanes between module units, stack base, and each manway opening at bottom of modules to be sure that all boiler handholes and manways are tight and ready for start up. Remove all tools and foreign matter from the gas side of the unit. This is particularly true of any burnable debris around the superheater and boiler inlet.

6.2. Make sure no personnel, equipment, or materials are left inside the gas path before closing the duct and casing manways.

6.3. Examine all the auxiliary equipment, making sure that all equipment has been supplied for design conditions and are operable. Examine all lower areas of the unit to make sure adequate expansion clearance has been allowed for and no drain line or header movement will be impeded. Thermal expansion of the SH or RH sections on some units may be as great as 6” in the downward direction.

Remove the hydro-plugs or blinds on the safety valves (as applicable) used for boiler hydrostatic test before starting boilers. As a general rule, safety valves with butt welded inlets will have hydro-plugs, valves with flanged inlets will use pancakes.

NOTE: The removal of hydro-plugs and any disassembly or setting of the safety valves must be completed by a field serviceman with a "V" stamp. It is recommended that the original valve manufacturer be contacted to ensure that all valve warranties and guarantees are not voided.

6.4 If the feedwater heaters, evaporators, economizers, and superheater modules have not been recently filled with boiler water or stored as per Section II Part 10, open the bottom (intermittent) blowdown valve(s), the feedwater heater drain valves, the economizer drain valve(s), and the superheater drain valves. Open the economizer, steam drum, superheater, reheater, and feedwater heater vent valve(s).

6.5 Allow the unit to drain completely free of all residual water. If boilers have been stored with good boiler grade water, drain only the superheaters.

6.6 Fill the low pressure (LP) boiler through the feedwater inlet. Close the boiler feed line drain valve(s), the economizer drain valve(s) progressively (as water enters each pass), and the boiler bottom drain(s) or blowdown(s) when clean

water has reached the feeder headers. Flush the lines between the low pressure boiler and the boiler feed pumps. Open strainers, flanges, or sections of pipe to flush lines thoroughly. Also make sure all water lines to any attemperators have been flushed thoroughly to avoid plugging any attemperator nozzles.

If lines have been "hard piped" before this operation, it is best to "listen" with an industrial stethoscope or "feel" the valve(s) for temperature increase if using hot water in order to verify lines have flow and are properly flushed.

6.7 Slowly fill all of the boiler(s) using normal feedwater (cool, if available) to a level of about one inch above the bottom of the gauge glass (or until the low water cutout or alarm has cleared). During start up reheater sections will be run dry. Feedwater temperature for each boiler should not be more than 50 ℉ (28 °C) higher than the metal of the drums and headers being filled. If hot water is used, extreme care must be taken to feed the water slowly and vent sufficiently so that a maximum of 15 psig (1 bar) results from the flashing feedwater.

6.8 Re-check all economizer drum vents during this filling and flushing; open until filled and then close to contain water and steam. Open superheater drains.

6.9 When each drum level reaches one inch above the bottom of the gauge glass (or clears the low level cutoff), close the economizer vents and close the boiler feedwater valve(s). Keep the superheater vents and drains open.

6.10 The unit is now ready for exhaust gases (GTE). Start the combustion turbine and bring up to Full Speed No Load (FSNL). Follow the start-up guidelines given in Section I, Tab 5 of this manual.

6.11 As the pressure increases, blow down the steam pressure gauge drain lines, the water columns, water gauge glass drain lines, and all other instrument lines at 1/4, 1/2, 3/4, and full pressure to insure proper flushing and operation of instrumentation and valves.

Close the superheater drains at the pressure recommended in Section I, Tab 5 of this manual.

6.12 On pressures up to 600 psig (41.3 bar), lift the safety valves manually when the steam pressure is 75% of the nameplate pressure to blow the seat clean. The safety valves should then be tested by raising the boiler steam pressure to "set pressure" of each valve to see that it relieves and re-seats at the correct pressure within allowed tolerance. If field testing the safety valves is not practical, each valve should be bench tested by a firm holding an ASME "V"

stamp. This should be done in accordance with all applicable codes. Careful records of the pressures at which these valves relieve and re-seat must be made and signed by all witnesses. ASME Power Boiler Code, Section I, PG 72.3 (A86) states this must be done by the manufacturer or his authorized representative (See Note in Paragraph 6.3).

6.13 Open the non-return bypass line valve(s) during steam line warm-up. The drain valves between the main steam stop valves and the non-return valves should be opened to drain condensate. Allow the steam lines to heat up to saturation temperature, but keep the condensate pockets drained dry.

6.14 As the boiler(s) heats up and the pressure builds, the water level in the gauge glass(es) will rise due to the expansion of the water. As the pressure increases this “swell” effect will cease and the level will be controlled by the level control valves. Care must be taken that the water level is maintained at plus or minus 4" (100mm) of the Normal Water Level (NWL) when the unit is put into service, to prevent water being carried over into the superheater or steam header. The water level should be maintained within the visibility range of the gauge glasses throughout the start up period. The unit should be blown down only if necessary to maintain the water level within the visible range.

6.15 Refer to Section I, Tab 5 for acceptable start up ramp rates and specific start up instructions. Venting of steam may be necessary to maintain the steam pressure. The HP drum ramp rate should be maintained in order to prevent early fatigue failure of boiler components. Outside of this restriction, the boiler can be increased to full load pressure and temperature as fast as the turbine will permit. A hot start from 600 psig (41.4 bar) to full load pressure and temperature is generally faster and sometimes as fast as the turbine will permit.

6.16 When the steam outlet pressure is the same as the line pressure, the lines will be equalized. The main steam stop valve should then be fully opened. As the unit reaches line pressure and is steaming, the non-return valve should travel to the full open position.

6.17 If a steam-turbine generator is the sole or main high pressure steam user, regulate the steam production to accommodate the turbine requirements.

6.19. After a new unit has been brought up to working pressure and temperature, it is important to check all manway bolts for tightness. "Snug up" all loose bolts.

6.20. Platforms, conduit supports, pipe, and ladders must be checked for proper expansion allowance during initial operation.

OPERATION
&
MAINTENANCE MANUAL

For

Vogt Power International Inc.
Heat Recovery Steam Generators

For

SPP ABPR Amata City CCCP Project
Amata B. Grimm Power (Rayong) 2 Limited

Vogt Power Project No. 17460

Vogt Document No. V17460-OMNE-001

VOLUME 2

OPERATION & MAINTENANCE MANUAL

For

Vogt Power International, Inc.
Heat Recovery Steam Generators

for

SPP ABPR Amata City CCCP Project
Amata B. Grimm Power (Rayong) 2 Limited

Vogt Power Project No. 17460

Vogt Power Document No. V17460-OMNE-001

Written By: Kathy Hugle

Reviewed By: Matt Kreis

Revision: 1
Date: 19 February 2013

The purpose of this manual is to suggest procedures for the operation and maintenance of the HRSG and its subsidiary parts. This guide does not cover all variations in equipment, nor does it provide for every possible requirement or contingency. The specific site conditions, staffing, accessibility, and interfacing equipment must be considered when implementing the information provided herein.

Refer to the Vogt Power International Erection Manual for specific information concerning unloading, storage, and installation of the equipment. Refer to the Vogt Power International Training Manual for operator training. Should other information be desired, or particular situations arise that are not addressed in this manual, the matter should be referred to Vogt Power International.

This manual describes the HRSG, its components and ancillaries to aid the Owner in its development of appropriate procedures for operating and maintaining the equipment. It also contains specific design and performance information, including drawings, equipment lists, and data sheets, purely for convenience. However, this document is not contractual, and should not be referred to in contractual matters.

This document contains minimum procedures for operating and maintaining the HRSG components and is intended to assist the operators in planning and scheduling operational and maintenance activities. It is not intended to and does not cover all details or variations in equipment, or provide for every possible contingency.

INDEX

VOLUME 1 – Vogt Power HRSG O&M Manual

SECTION I DESIGN DATA

Tab 1 - Drawing and Document List
Tab 2 - System Design Description
Tab 3 - Safety Valve Data
Tab 4 - Performance Data
Tab 5 - Start-up Procedure
Tab 6 - Gas Side Pressure Drop
Tab 7 - Heating Surface Data
Tab 8 - Boiler Feedwater and Boiler Water
Tab 9 - Performance Prediction

SECTION II OPERATIONAL PROCEDURES

Tab 1 - Safety Precautions
Tab 2 - Suggested Operational Procedure
Tab 3 - Removal from Service, Lay-up, and Long Term Storage
Tab 4 - Tube Failure Analysis
Tab 5 - Troubleshooting Procedures
Tab 6 - Maintenance Checklists
Tab 7 - Pressure Part Life
Tab 8 - Warranty, Inspection and Maintenance Reports and Forms

SECTION III COMMISSIONING PROCEDURES

Tab 1 - Preliminary Filling and Flushing
Tab 2 - Hydrostatic Test
Tab 3 - Alkaline Boilout
Tab 4 - Chemical Cleaning
Tab 5 - Steam Blow Cleaning
Tab 6 - Commissioning

SECTION IV SUBVENDOR MANUALS

Volume 2 – Diverter Damper

Volume 3 – Valves and Inline Components

Tab 1 - Control Valves
Tab 2 - Safety Valves
Tab 3 - General Service Valves
Tab 4 - General Service Valve Actuators
Tab 5 - Strainers
Tab 6 - Steam Sample Nozzles
Tab 7 - Instrument Valves
Tab 8 - Attemperators

Volume 4 – Instrumentation

Tab 1 - Transmitters
Tab 2 - Level Gauges and Remote Level Indicators
Tab 3 - Thermocouples & Temperature Indicators
Tab 4 - Pressure Gauges & DP Gauges

Volume 5 – Deaerator & Heat Exchanger

Tab 1 - Deaerator
Tab 2 - Heat Exchanger

Volume 6 – Miscellaneous Equipment

Tab 1 - Outlet Expansion Joints
Tab 2 - Inlet Expansion Joints
Tab 3 - Steam Silencers
Tab 4 - Pipe Supports
Tab 5 - Flow Elements
Tab 6 - Aircraft Warning Lights
Tab 7 - Stack Silencers

BALTEC INLET & EXHAUST SYSTEMS

SGT-800 DIVERTER DAMPER

OPERATING MANUAL

Client ..... **Vogt Power International**

Client PO No. ..... **4233 & 4234**

Site Location ..... **Amata City 1 & 2, Rayong, Thailand**

Project Description ..... **4-off SGT-800 Bypass Exhaust Systems**

Manual Prepared by ..... **PD**

Baltec File **8312MA-900-003**

Date ..... **January 2013**

Revision Level **1**

VOGT POWER INTERNATIONAL
V17460-ADXE-502-00
03-Jan-2013

This publication contains essential information for the assembly, installation and safe, efficient operation of the BALTEC IES Diverter Dampers.

Carefully read this publication before assembling and installing the equipment and review this and any associated documentation before commencing the commissioning procedure.

NOTE:

FAILURE TO COMPLY WITH THESE INSTRUCTIONS COULD, UNDER EXTREME CONDITIONS, CAUSE PREMATURE COMPONENT FAILURE, INVALIDATE THE BALTEC WARRANTY AND MAY RESULT PROPERTY DAMAGE.

WARNING!

NEVER STAND UNDERNEATH A PARTIALLY- OR FULLY-OPEN DIVERTER BLADE UNLESS THE COMPLETE DRIVE SYSTEM IS INSTALLED. IF ACCESS TO THE AREA BENEATH THE DIVERTER BLADE IS NECESSARY (EG. TO INSPECT LANDING BARS), IT SHOULD ONLY BE DONE WITH THE DRIVE SYSTEM FULLY INSTALLED AND ONLY WITH THE BLADE STATIONARY. FAILURE TO FOLLOW THESE SAFETY GUIDELINES MAY RESULT IN SERIOUS INJURY OR DEATH.

As part of our warranty conditions, a BALTEC IES engineer must supervise the commissioning procedure and any subsequent inspections associated with the installation. BALTEC IES cannot be responsible for rectification costs or waiting time incurred by their representatives as a result of damage or incorrect installation. BALTEC IES engineering representatives are available for assembly, commissioning and maintenance advice by writing to the below address, or by faxing or telephoning:

BALTEC INLET & EXHAUST SYSTEMS PTY LTD
FACTORY 4, 35 GILBERT PARK DRIVE
KNOXFIELD, VICTORIA, 3180
AUSTRALIA

TEL: +61 3 9763 6711
FAX: +61 3 9763 6799

PLEASE QUOTE OUR CONTRACT NUMBER **8312MA** IN ALL COMMUNICATIONS.

REVISION LOG

Date	Rev	Pages Affected	Revision Description
03.01.2013	1	all	first issue

Table of Contents

FOREWORD **5**

1 INTRODUCTION **6**

1.1 SYSTEM DESCRIPTION 6
1.2 ACTUATOR AND GEARBOXES 6
1.3 PRINCIPLE OF OPERATION 7
1.4 SEAL AIR SYSTEM 7
1.5 LOCAL CONTROL PANEL 8

2 DIVERTER CONTROL FROM THE OPERATOR PANEL **9**

2.1 PRIOR TO OPERATION 9
2.2 LCD OPERATOR PANEL – OVERVIEW 9
2.3 SELECTING LOCAL OR REMOTE MODE 11
2.4 STARTING & STOPPING THE SYSTEM 11
2.5 OPENING/CLOSING THE DIVERTER LOCALLY 11
2.6 FAULTS DISPLAYED 12
2.7 RESETTING FAULTS 12

3 DIVERTER OPERATION PRINCIPLES **14**

3.1 OPENING TO HRSG 14
3.2 CLOSING TO HRSG 14
3.3 PAUSING BLADE MOVEMENT 15
3.4 HOLDING BLADE IN POSITION 15
3.5 EMERGENCY CLOSING 15
3.6 SEAL AIR SYSTEM OPERATION 16
3.6.1 Blade Closed to HRSG: *16*
3.6.2 Blade Opened to HRSG: *16*
3.7 SEAL AIR PRESSURE MEASUREMENT 16

4 USER-ADJUSTABLE PARAMETERS **18**

4.1 ADJUSTING THE MINIMUM DIFFERENTIAL PRESSURE 18
4.2 ADJUSTING THE VSD OFF-DELAY TIME 18
4.3 ADJUSTING THE VSD START TIME 19
4.4 ADJUSTING THE BLADE PAUSE TIME 19

APPENDIX A **20**

APPENDIX B **22**

FOREWORD

The purpose of this Manual

The aim of this manual is to help the end user gain a greater understanding of the BALTEC Diverter Damper control system by detailing adequate procedures for the operation of the equipment supplied.

The Arrangement of the Manual

The manual is divided into sections, or chapters, each covering logical sub-divisions. The chapters are numbered with single figures, eg. 1, 2, 3, etc, and may also be divided into sub-sections with decimal numbers following on from the section they are in, eg. 1.1, 1.2, 1.3 etc.

Whilst every care is taken to ensure that the information in the manual is correct, no liability can be accepted by the authors for loss, damage or injury caused by errors in, or omissions from the information given.

Component manufacturers continually make changes to specifications and recommendations, and these, when notified, are incorporated into our manuals at the earliest opportunity.

1 INTRODUCTION

1.1 System Description

The force required to move the diverter blade is supplied by an electric actuator and a pair of worm / bevel gearbox assemblies. An electrical control panel, providing all the features necessary to control the diverter blade, is mounted close to the diverter. All electrical cabling and process connections enter the panel from the underside.

The electric actuator is fully self-contained. In addition to the drive motor, it also contains the limit switches, torque switches and 4-20mA position transmitter. The actuator is coupled to two right angle bevel gearboxes by drive shafts, and these in turn drive worm gearboxes which are connected directly to the diverter blade pivot shaft with a splined and keyed coupling.

Power is supplied to the actuator by a Variable Speed Drive (VSD) fitted inside the electrical control panel. The VSD allows the diverter blade to move at three different speeds: Normal, Emergency Close and Creep. Details of the requirement for different speeds are given later in this text.

1.2 Actuator and Gearboxes

The main components / features of the Auma electric actuator are as follows:

- 4.0kW 3-phase 400V 50Hz drive motor
- Two sets of open/close direction limit switches
- One set of open/close direction torque switches
- One set of intermediate position limit switches, to sense when blade is within 10 degrees of fully open or fully closed
- 4-20mA electronic position transmitter for blade position indication
- Local dial-type mechanical position indicator
- Hand wheel for emergency manual operation
- Permissible ambient temperature range -25°C to +70°C
- Enclosure sealed to IP67, epoxy painted

The reduction ratios of the gearboxes are as follows:

- Worm drive gearboxes: 52:1
- Right angle bevel gearboxes: 8:1

1.3 Principle of Operation

The actuator motor is driven directly by the VSD fitted inside the electrical panel, and the direction and speed of blade movement is controlled electronically by the VSD. Different speeds are achieved by varying the output frequency to the motor, while the direction of travel is determined by phase sequencing.

The logic inside the electrical panel takes inputs from the various limit switches and sensors fitted to the actuator, and accepts signals from the local panel's pushbuttons and/or the client's central control room (DCS). The logic then instructs the VSD perform the appropriate function.

During normal opening and closing of the blade, the actuator motor will be run at 50Hz, giving a nominal 60sec operating time. Over the last 10 degrees of travel in each direction, as sensed by the intermediate-position limit switches, the frequency will be reduced to slow the blade down. This provides a slow, or creep, speed to allow the blade to approach the mechanical stops slowly, thus preventing any possible damage to the blade, blade stops or seals. The output frequency in this zone is normally set during commissioning to 35Hz (i.e. 70% of normal speed).

During emergency closing only, the output frequency will be increased to 60Hz, giving a faster than normal closing time (45sec nominal).

When the blade is stationary, either fully open, fully closed, or in any intermediate position, it will be safely held in position by the worm drive gearboxes, which are self-locking by virtue of their design. This is the case even in the event of a complete power failure.

1.4 Seal Air System

A pair of Seal Air Fans, operating through interconnecting pipe work, supplies air to the interspace between the two rows of blade seals, at a pressure above that of the operating pressure within the duct. This ensures that any leakage is into the duct, not out from it, thus providing 100% isolation of the turbine exhaust gases. There are two fans provided, which for this project are controlled directly from the client's MCC. One of the fans should be switched on whenever the diverter is fully closed or fully open. During long periods of continuous operation, the fans should be switched over to equalise the running times – every 10 hours is the suggested changeover period.

If sufficient seal air system pressure cannot be obtained within a preset time with the duty fan (as signalled by the 'Air Barrier Safe' signal from the local control panel), the MCC should switch over to the standby fan.

1.5 Local Control Panel

This contains all the logic and switchgear necessary to control the operation of the diverter and the seal air system. It includes the following:

- Variable speed drive (VSD)
- Programmable Logic Controller (PLC)
- Main isolator for incoming 3-phase power
- Main isolator for incoming 1-phase UPS power
- Circuit breakers for VSD and internal logic.
- Contactor for energising the VSD / actuator motor
- LCD Operator Panel for local control and to indicate the Diverter status
- Interface to central control room (DCS) to provide remote operation and feedback
- Emergency stop button
- Differential Pressure Transmitters for Seal Air System

2 DIVERTER CONTROL FROM THE OPERATOR PANEL

Normally, control of the diverter emanates from the client's central control room (DCS), where the diverter blade position is calculated to suit the operating conditions of the turbine and HRSG. Local control from the control panel is also possible during commissioning and for maintenance purposes.

Please note the following definitions when reading the remainder of this manual:

The **open** position is defined as the blade being **open to the HRSG** (closed to atmosphere).
"Open Diverter" means moving the blade towards the open position.

The **closed** position is defined as the blade being **closed to the HRSG** (open to atmosphere)
"Close Diverter" means moving the blade towards the closed position.

2.1 Prior to Operation

To enable operation of the control system, the following conditions must be met:

- Power turned ON at Main Isolators IS1 & IS2
- Circuit breakers all turned ON
- Emergency Stop button released
- Isolation valves for differential pressure transmitters turned ON
- Manual butterfly valves at Seal Air Fan outlets opened

2.2 LCD Operator Panel – Overview

The LCD Operator Panel indicates the operational status of the diverter, provides local pushbuttons for opening/closing and displays a menu system for modifying parameters and setting the operating mode. Fig 1. shows the layout of the Operator Panel.

The pushbuttons on the Operator Panel have the following functions:

- OPEN DAMPER – Opens the diverter when in Local Mode
- CLOSE DAMPER – Closes the diverter when in Local Mode
- UP ARROW – Scrolls up, or increases the currently selected value
- DOWN ARROW – Scrolls down, or decreases the currently selected value
- MENU/ESC – Toggles between normal display and menu display, or aborts an edit
- ENTER – Accepts the current value or selection

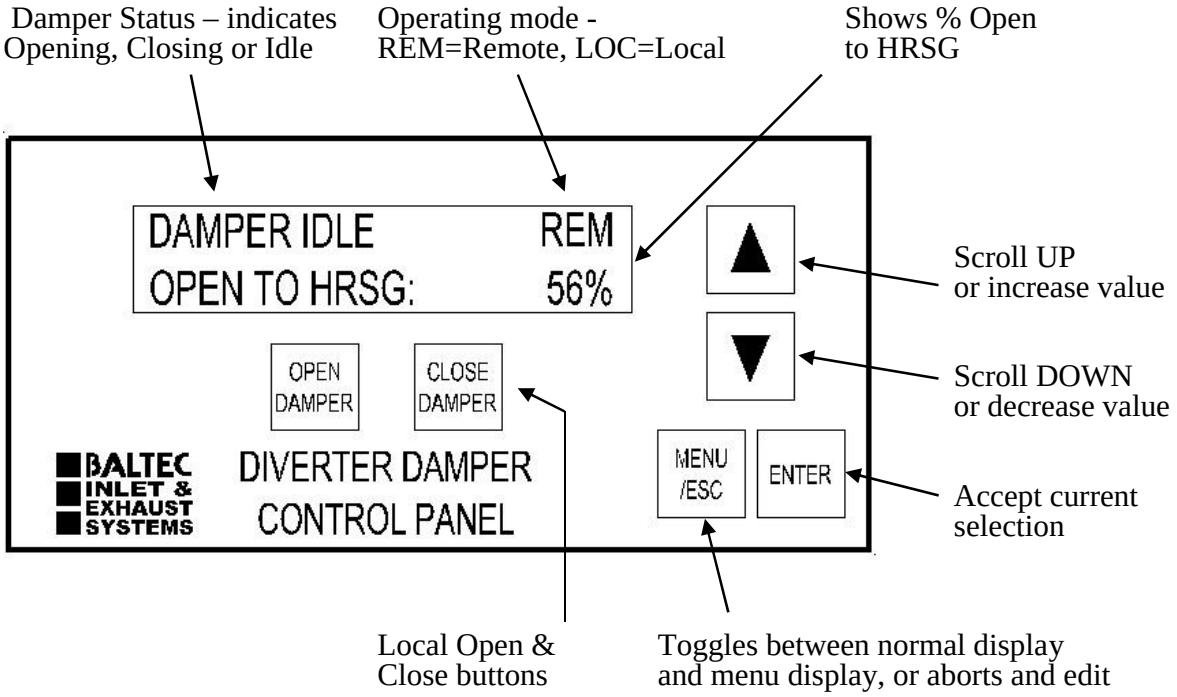

Fig 1. LCD Operator Panel

The display always gives an indication of the position of the diverter blade:

- "OPEN TO HRSG" is displayed in the fully open position
- "CLOSED TO HRSG" is displayed in the fully closed position
- "OPEN TO HRSG: xx%" is displayed in any intermediate position, where xx = % open

Also, in any intermediate position the following messages are displayed to indicate whether the diverter is opening or closing:

- "DAMPER OPENING" indicates that the blade is opening to the HRSG
- "DAMPER CLOSING" indicates that the blade is closing to the HRSG
- "DAMPER IDLE" indicates that the blade is not moving

When the diverter is fully open or fully closed, the display will indicate the operational status of the Seal Air System:

- "WAIT... DP=xxxPa" indicates that the Seal Air System is starting
- "AIR BARRIER OK DP=xxxPa" indicates that the Seal Air System is ok

In the above cases, xxx = actual differential pressure in the Seal Air System, in Pascals.

Local / Auto mode is indicated in the top-right of the display as follows:

- "REM" indicates Remote Mode – Diverter will respond to commands from the DCS
- "LOC" indicates Local Mode – Diverter will respond to local open/close buttons

2.3 Selecting Local or Remote Mode

To select Local or Remote Mode, follow these steps:

a) Press “MENU/ESC” to select Menu display
b) Scroll up or down to highlight “USER MENU” and press “ENTER”
c) Scroll up or down to highlight “OPERATING MODE” and press “ENTER”
d) Press “ENTER” to allow the Operating Mode to be changed, or “ESC” to go back 1 step
e) Select “1” for Remote Mode or “2” for Local Mode and press “ENTER”
f) Press “ESC” twice to return to the normal display

Note that the local Emergency Stop will operate whether in Local or Remote mode.

2.4 Starting & Stopping the System

Prior to operating the Diverter Damper it will first be necessary to Start the System according to the following steps:

a) Press “MENU/ESC” to select Menu display
b) Scroll up or down to highlight “USER MENU” and press “ENTER”
c) Scroll up or down to highlight “SYSTEM STATUS” and press “ENTER”
d) Press “ENTER” to allow the System Status to be changed, or “ESC” to go back 1 step
e) Select “1” to start the system or “0” to stop she system and press “ENTER”
f) Press “ESC” twice to return to the normal display

2.5 Opening/Closing the Diverter Locally

When in Local Mode (“LOC” displayed in top right corner of LCD), press and hold “OPEN DAMPER” to open the diverter, or “CLOSE DAMPER” to close the diverter.

The damper status (“OPENING”, “CLOSING”, “OPEN TO HRSG” or “CLOSED TO HRSG”) will be displayed as described in section 2.2.

2.6 Faults Displayed

A fault condition will be indicated if any of the following happens:

- The Variable Speed drive has an internal fault or its circuit breaker has tripped
- The Actuator Motor's temperature is too high
- One of the actuator's torque switches has tripped due to mechanical overload
- A fault is detected with the limit switches
- The Position Transmitter has a problem or needs calibrating
- The Local Emergency Stop button has been pressed
- Remote Mode is selected and DCS Emergency Close command is already active (DCS contact open)

If the damper is in any intermediate position, the message "IDLE – FAULT!" will be displayed

If the damper is fully open or fully closed, only the Seal Air System status will be displayed, but further faults can be viewed by scrolling down the display.

If a fault is present, but is not currently displayed, a flashing arrow (↓) will appear at the bottom right corner of the display screen.

IT IS AN OPERATIONAL REQUIREMENT THAT THE LOCAL DISPLAY SCREEN IS CHECKED DAILY FOR THE PRESENCE OF ANY FAULT MESSAGES. FAULTS MAY EITHER BE INDICATED ON THE SCREEN DIRECTLY, OR INDICATED BY A FLASHING ARROW AT THE BOTTOM RIGHT CORNER OF THE SCREEN. IN THE CASE OF A FLASHING ARROW, SIMPLY SCROLL DOWN TO VIEW THE FAULT MESSAGE.

A list of all faults is given in Table A1 in appendix A.

2.7 Resetting Faults

It may be necessary to reset the system to clear certain faults (after the cause of the fault has been determined). To clear faults, follow these steps:

a) Press "MENU/ESC" to select Menu display
b) Scroll up or down to highlight "USER MENU" and press "ENTER"
c) Scroll up or down to highlight "FAULT RESET" and press "ENTER"
d) Press "ENTER" to allow the selection to be changed, or "ESC" to go back 1 step
e) Select "1" to reset the fault(s) and press "ENTER"
f) Press "ESC" twice to return to the normal display

Note that the following faults are self-resetting (i.e. the fault will be cleared automatically once the fault condition is removed):

- Actuator motor temperature – fault will be cleared once the actuator has cooled down
- Torque switch trip – fault will be cleared once the load is removed from the drive system and/or any wiring fault is corrected
- Limit switch fault – fault will be cleared once the limit switch adjustment and/or wiring is corrected
- Position Transmitter calibration – the fault will be cleared once the position transmitter is calibrated correctly
- Emergency Close Disable – the fault will be cleared once the DCS Emergency Close contact is closed or Local Mode is selected

.

3 DIVERTER OPERATION PRINCIPLES

3.1 Opening to HRSG

On receiving an ‘open’ signal, either locally or from the DCS, the following actions will take place simultaneously, providing the diverter is not already fully open:

- VSD open direction will be selected
- Actuator motor speed will be ramped from zero up to the preset speed (normally programmed as 50Hz)

If the blade is less than 10 degrees open, the VSD will continue moving the blade to the 10 degrees open position, even if the open command is removed during this time

Between 10 and 80 degrees open, the VSD will continue to drive the actuator at normal speed. When the signal is removed and the blade is between 10 and 80 degrees open, the VSD will ramp the motor speed down to zero and the blade will stop.

When the blade is within 10 degrees of fully open, the VSD will continue moving the blade to the fully open position at slow speed, even if the open command is removed during this time. When in the fully open position, the “DAMPER OPEN” message will be displayed on the local panel and a corresponding signal will be sent to the central control room (DCS).

3.2 Closing to HRSG

On receiving a ‘close’ signal, either locally or from the DCS, the following actions will take place simultaneously, providing the diverter is not already fully closed:

- VSD close direction will be selected
- Actuator motor speed will be ramped from zero up to the preset speed (normally programmed as 50Hz)

If the blade is more than 80 degrees open, the VSD will continue moving the blade to the 80 degrees open position, even if the close command is removed during this time

Between 10 and 80 degrees open, the VSD will drive the actuator at normal speed. When the signal is removed and the blade is between 10 and 80 degrees open, the VSD will ramp the motor speed down to zero and the blade will stop.

When the blade is within 10 degrees of fully closed, the VSD will continue moving the blade to the fully closed position at slow speed, even if the close command is removed during this time. When in the fully closed position, the “DAMPER CLOSED” message will be displayed on the local panel and a corresponding signal will be sent to the central control room (DCS).

3.3 Pausing Blade Movement

After each movement of the blade, the blade will be “frozen” in position until a preset “Pause Time” has elapsed. This protects the blade from fatigue caused by excessive repeated movements. The “Pause Time” is typically set to 1 minute during commissioning, but is adjustable (see sect. 4.6).

If another command is received during this period (either from the DCS or local operator panel), the message “WAIT... xx SEC” will be displayed, where xx = the actual number of seconds remaining until the blade can again be moved.

3.4 Holding Blade in Position

Whenever the diverter blade is stationary, be it fully closed, fully open or in an intermediate position, it will be held in position by virtue of the self-locking nature of the worm-drive gearboxes. The diverter can remain in this state indefinitely, until the next command is received to move the blade.

3.5 Emergency Closing

An emergency close command issued by the central control room will cause the diverter blade to close quickly (approx 45 seconds). This is normally only necessary if there is a major problem with the HRSG, requiring immediate redirecting of the hot exhaust gasses. **To enable Emergency Closing, Remote Mode must first be selected**, enabling operation from the central control room (DCS). On receipt of the emergency close command, the following will take place:

- VSD signalled to select close direction
- Actuator motor speed will be ramped from zero up to emergency close speed (normally programmed as 60Hz).

As with a normal close, when the blade reaches 10 degrees of fully closed (by which time there is negligible flow to the HRSG), the VSD will continue closing the blade at creep speed until fully closed. “DAMPER CLOSED” indication will be given as normal.

3.6 Seal Air System Operation

Operation of the Seal Air System is as follows:

3.6.1 Blade Closed to HRSG:

- Duty Fan is started by client's MCC
- HRSG side butterfly valve actuator is opened automatically by local control panel
- Bypass side butterfly valve actuator is closed automatically by local control panel
- Operator to monitor the 'air barrier safe' signal at DCS (or check local display) to ensure there is no seal air pressurisation problem
- If there is a failure of the duty fan (i.e. pressure cannot be achieved with approx. 10-15 seconds), the MCC should switch over to the standby fan
- If blade starts to open, both butterfly valves are closed automatically by local control panel and fan should be switched off by client's MCC

3.6.2 Blade Opened to HRSG:

- Duty Fan is started by client's MCC
- Bypass side butterfly valve actuator is opened automatically by local control panel
- HRSG side butterfly valve actuator is closed automatically by local control panel
- Operator to monitor the 'air barrier safe' signal at DCS (or check local display) to ensure there is no seal air pressurisation problem
- If there is a failure of the duty fan (i.e. pressure cannot be achieved with approx. 10-15 seconds), the MCC should switch over to the standby fan
- If blade starts to close, both butterfly valves are closed automatically by local control panel and fan should be switched off by client's MCC

3.7 Seal Air Pressure Measurement

The differential pressure attained by the seal air system is measured by the differential pressure transmitters mounted inside the local control panel. A differential pressure of at least 250 Pa will ensure 100% sealing, however an operating pressure above this level can normally be achieved.

The PLC measures the 4-20mA output signal from the differential pressure transmitters and displays the actual pressure (in Pa) on the LCD display. "AB SAFE" will be displayed in the event sufficient pressure is achieved, along with the actual pressure in Pascals (Pa).

IF THE "AIR BARRIER SAFE" MESSAGE DOES NOT APPEAR ON THE LOCAL DISPLAY SCREEN OR "AIR BARRIER SAFE" SIGNAL IS NOT RECEIVED BY THE

DCS WITHIN ABOUT 10-15 SECONDS OF THE FAN STARTING, IT INDICATES THAT THE SEAL AIR SYSTEM IS NOT PROVIDING A 100% SEAL. POSSIBLE CAUSES ARE PIPE BLOCKAGES, CHECK VALVE FAILURE, FAN MOTOR FAILURE, ACTUATED VALVES NOT OPERATING CORRECTLY, OR LOSS OF A PHSICAL SEAL (I.E. BLADE NOT POSITIONING CORRECTLY).

THE MCC SHOULD SWITCH OVER TO THE STANDBY FAN IN THIS INSTANCE, HOWEVER IF SEAL AIR PRESSURE STILL CANNOT BE ACHIEVED PLEASE CONTACT BALTEC FOR THE CORRECT TROUBLESHOOTING PROCEDURE.

An additional mechanical gauge measures the static pressure at the fan outlets, between 0-1600 mmH_2O (~0-16kPa) to indicate the operating performance of the fans. Normal operating pressure is approximately 600-800 mmH_2O (~6-8kPa).

NOTE: All gauges and pressure transmitters have isolating valves in their interconnecting pipework. Always ensure all valves are ON during normal operation. Only turn the valves OFF should the gauge or transmitter require removal for maintenance or replacement.

4 USER-ADJUSTABLE PARAMETERS

4.1 Adjusting the Minimum Differential Pressure

This sets the minimum differential pressure that is required of the Seal Air System in normal operation. If this pressure is not achieved within the preset time (typ 10-15 sec), the standby fan should be started. This pressure is normally set to 250 Pa, but is adjustable from 0-500 Pa, as follows. Note – setting this parameter to 0 will disable pressure checking & AB Safe will always be displayed.

a) Press “MENU/ESC” to select Menu display
b) Scroll up or down if necessary to highlight “USER MENU” and press “ENTER”
c) Scroll up or down to highlight “PARAMETER ADJUST” and press “ENTER”
d) Scroll up or down if necessary to highlight “MIN DIFF PRESSURE (0-500)”
e) Press “ENTER” to allow the time to be changed, or “ESC” to go back 1 step
f) Select the pressure required, between 0-500 Pa, and press “ENTER”
g) Press “ESC” twice to return to the normal display

4.2 Adjusting the VSD Off-Delay Time

This sets the time after which the VSD will turn off following the last open/close operation. This reduced power consumption and reduces heat build-up inside the local control panel. Note that if the VSD has turned off, it will take a few seconds after receipt of the next open/close command before the VSD is re-started and the blade can be moved (see 4.5). This VSD Off-Delay time is typically set to 1 minute, but is adjustable from 1-60 minutes, as follows:

a) Press “MENU/ESC” to select Menu display
b) Scroll up or down if necessary to highlight “USER MENU” and press “ENTER”
c) Scroll up or down if necessary to highlight “PARAMETER ADJUST” and press “ENTER”
d) Scroll up or down to highlight “VSD OFF DELAY TIME (1-60) MIN”
e) Press “ENTER” to allow the time to be changed, or “ESC” to go back 1 step
f) Select the time required, between 1-60 minutes, and press “ENTER”
g) Press “ESC” twice to return to the normal display

4.3 Adjusting the VSD Start Time

This sets the maximum time it should take the VSD to start up after its contactor closes. If the VSD does not start within this time, a VSD internal fault will be indicated. This time is typically set to 3 seconds, but is adjustable from 1-10 seconds, as follows:

Press “MENU/ESC” to select Menu display

a) Scroll up or down if necessary to highlight “USER MENU” and press “ENTER”
b) Scroll up or down if necessary to highlight “PARAMETER ADJUST” and press “ENTER”
c) Scroll up or down to highlight “VSD START TIME (1-10) SEC”
d) Press “ENTER” to allow the time to be changed, or “ESC” to go back 1 step
e) Select the time required, between 1-10 seconds, and press “ENTER”
f) Press “ESC” twice to return to the normal display

4.4 Adjusting the Blade Pause Time

This sets the time during which the blade cannot be moved, following the last open or close movement.. This time is typically set to 1 minute, but is adjustable from 1-10 minutes, as follows:

a) Press “MENU/ESC” to select Menu display
b) Scroll up or down if necessary to highlight “USER MENU” and press “ENTER”
c) Scroll up or down if necessary to highlight “PARAMETER ADJUST” and press “ENTER”
d) Scroll up or down to highlight “BLADE PAUSE TIME (1-10) MIN”
e) Press “ENTER” to allow the time to be changed, or “ESC” to go back 1 step
f) Select the time required, between 1-10 minutes, and press “ENTER”
g) Press “ESC” twice to return to the normal display

APPENDIX A

Table A1 – Fault Messages

No.	Displayed Message	Conditions Causing Fault	Result	Signal to DCS
1	EMERGENCY STOP	Local Emergency Stop button has been pressed	Diverter cannot be moved	Yes – via "Common Fault" signal
3	ACTUATOR TEMP HIGH	Actuator motor thermo switch has tripped	Diverter cannot open but can still be closed	Yes – via "Common Fault" signal
4	OPEN TORQUE SW TRIP	Actuator Open Torque Switch has tripped	Diverter cannot open	Yes – via "Common Fault" signal
5	CLOSE TORQUE SW TRIP	Actuator Close Torque Switch has tripped	Diverter cannot close	Yes – via "Common Fault" signal
6	VSD INTERNAL FAULT	VSD internal fault or VSD circuit breaker tripped	Diverter cannot be moved	Yes – via "Common Fault" signal
9	LIMIT SWITCH FAULT 1	Open Limit Switch + Closed Limit Switch both activated	Seal air directed to both HRSG & Bypass sides for safety	Yes – via "Common Fault" signal
10	LIMIT SWITCH FAULT 2	10deg + 80deg Limit Switch both activated	Damper limited to slow speed only & may not stop in int. position	Yes – via "Common Fault" signal
11	LIMIT SWITCH FAULT 3	Open Limit Switch + 10 deg Limit Switch activated	Damper operates normally	Yes – via "Common Fault" signal
12	LIMIT SWITCH FAULT 4	Closed Limit Switch + 80 deg Limit Switch activated	Damper operates normally	Yes – via "Common Fault" signal
13	LIMIT SWITCH FAULT 5	Open Limit Switch activated but not 80deg Limit Switch	Damper will operate normally, but will not slow down when approaching fully open	Yes – via "Common Fault" signal
14	LIMIT SWITCH FAULT 6	Closed Limit Switch activated but not 10deg Limit Switch	Damper will operate normally, but will not slow down when approaching fully closed	Yes – via "Common Fault" signal
15	POS TRANSMITTER CAL	Position signal less than -5% or more than +105% normal range	Damper operates normally	Yes – via "Common Fault" signal

Table A1 – Fault Messages (continued)

No.	Displayed Message	Conditions Causing Fault	Result	Signal to DCS
16	EMERG CLOSE DISABLED	DCS Emergency Close command present when Remote Mode is selected *	Damper operates normally, but will not Emergency Close	Yes – via "Common Fault" signal

* EMERG CLOSE DISABLED fault will be reset if:

a) Fault are manually cleared using the Fault Reset menu
b) DCS Emergency Close contact closes (command inactive)
c) Operator selects Local Mode

APPENDIX B

Table B1 – Signals to DCS

No.	Description	Conditions	Signal Type
1	DIVERTER OPEN	Diverter fully open to HRSG (closed by Bypass)	N.O. Relay Contact (closed = diverter open)
	“ “	“ “	N.O. Actuator Limit Switch (closed = diverter open)
2	DIVERTER CLOSED	Diverter fully closed to HRSG (open to Bypass)	N.O. Relay Contact (closed = diverter closed)
3	REMOTE MODE SELECTED	Remote Mode selected from Operator Panel (see sect 2.3)	N.O. Relay Contact (closed = remote mode)
4	AIR BARRIER SAFE	Diverter fully open or closed, and differential pressure ok	N.O. Relay Contact (closed = healthy / AB safe)
5	COMMON FAULT	See Table A1	N.O. Relay Contact (closed = healthy / no fault)
6	FAN 1 RUNNING	Fan 1 contactor is closed	N.O. Aux Contact (closed = fan running
7	FAN 2 RUNNING	Fan 2 contactor is closed	N.O. Aux Contact (closed = fan running
8	DIVERTER POSITION	Always	4-20mA, 4ma = fully closed, 20mA = fully open

Table B2 – Signals from DCS

No.	Description	Conditions	Signal Type
1	OPEN DIVERTER	If DCS wants to Open Diverter (must be in Remote Mode)	Volt-free N.O. Contact
2	CLOSE DIVERTER	If DCS wants to Close Diverter (must be in Remote Mode)	Volt-free N.O. Contact
3	EMERGENCY CLOSE	If DCS wants to perform Emergency Close (must be in Remote Mode)	Volt-free N.C. Contact (opening contact will cause Emergency Close)

BALTEC INLET & EXHAUST SYSTEMS

SGT-800 DIVERTER DAMPER

SEAL AIR FAN

OPERATION AND MAINTENANCE MANUAL

Client ..... **Vogt Power International**

Client PO No. ..... **4233 & 4234**

Site Location ..... **Amata City 1 & 2, Rayong, Thailand**

Project Description ..... **4-off SGT-800 Bypass Exhaust Systems**

Manual Prepared by ..... **S.C.**

Baltec File **8312MA-900-006**

Date ..... **January 2013**

Revision Level **3**

VOGT POWER INTERNATIONAL
V17460-ADXE-503-00
13-Feb-2013

This publication contains essential information for the assembly, installation and safe, efficient operation of the BALTEC IES Diverter Dampers.

Carefully read this publication before assembling and installing the equipment and review this and any associated documentation before commencing the commissioning procedure.

NOTE:

FAILURE TO COMPLY WITH THESE INSTRUCTIONS COULD, UNDER EXTREME CONDITIONS, CAUSE PREMATURE COMPONENT FAILURE, INVALIDATE THE BALTEC WARRANTY AND MAY RESULT PROPERTY DAMAGE.

WARNING!

NEVER STAND UNDERNEATH A PARTIALLY- OR FULLY-OPEN DIVERTER BLADE UNLESS THE COMPLETE DRIVE SYSTEM IS INSTALLED. IF ACCESS TO THE AREA BENEATH THE DIVERTER BLADE IS NECESSARY (EG. TO INSPECT LANDING BARS), IT SHOULD ONLY BE DONE WITH THE DRIVE SYSTEM FULLY INSTALLED AND ONLY WITH THE BLADE STATIONARY. FAILURE TO FOLLOW THESE SAFETY GUIDELINES MAY RESULT IN SERIOUS INJURY OR DEATH.

As part of our warranty conditions, a BALTEC IES engineer must supervise the commissioning procedure and any subsequent inspections associated with the installation. BALTEC IES cannot be responsible for rectification costs or waiting time incurred by their representatives as a result of damage or incorrect installation. BALTEC IES engineering representatives are available for assembly, commissioning and maintenance advice by writing to the below address, or by faxing or telephoning:

BALTEC INLET & EXHAUST SYSTEMS PTY LTD
FACTORY 4, 35 GILBERT PARK DRIVE
KNOXFIELD, VICTORIA, 3180
AUSTRALIA

TEL: +61 3 9763 6711
FAX: +61 3 9763 6799

PLEASE QUOTE OUR CONTRACT NUMBER **8312MA** IN ALL COMMUNICATIONS.

REVISION LOG

Date	Rev	Pages Affected	Revision Description
18.01.2013	1	all	First issue
30.01.2013	2	14-20	Data sheets added
31.01.2013	3	6, 10, 12, 13	General update

Table of Contents

FOREWORD **5**

1 INTRODUCTION **6**

1.1 SEAL AIR FAN SPECIFICATIONS 6
1.2 SAFETY PRECAUTIONS 6

2 FAN OPERATION **8**

2.1 INITIAL STARTUP 8
2.2 FAN OPERATION 8
2.3 FAN BALANCE 9
2.4 BEARING VIBRATION LIMITS 9
2.5 VIBRATION DETECTION PROCEDURE 10
2.6 LUBRICATION 11

3 TROUBLE-SHOOTING GUIDE **12**

APPENDIX A – FAN & MOTOR DATA SHEET **14**

FOREWORD

The purpose of this Manual

The aim of this manual is to help the end user gain a greater understanding of the Seal Air Fans installed as part of the Diverter Damper system supplied by BALTEC IES.

The Arrangement of the Manual

The manual is divided into sections, or chapters, each covering logical sub-divisions. The chapters are numbered with single figures, eg. 1, 2, 3, etc, and may also be divided into sub-sections with decimal numbers following on from the section they are in, eg. 1.1, 1.2, 1.3 etc.

Whilst every care is taken to ensure that the information in the manual is correct, no liability can be accepted by the authors for loss, damage or injury caused by errors in, or omissions from the information given.

Component manufacturers continually make changes to specifications and recommendations, and these, when notified, are incorporated into our manuals at the earliest opportunity.

1 INTRODUCTION

1.1 Seal Air Fan Specifications

The seal air fans, supplied by Fans Direct Pty Ltd, meet the following specifications:

Table 1 – Seal Air fan technical specifications

Output Volume Flow rate	3000 m^3/hr
Ouput pressure gain	6 kPa
Maximum noise level @ 1m, 1.5m above floor	80 dB (A)
Motor manufacturer	WEG
Motor operating voltage	400V
Motor phase	3 phase
Motor output power	7.5 kW

1.2 Safety Precautions

The fan supplied is a rotating piece of equipment that can become a source of danger to life, and can cause injury if not properly applied. Maximum operating temperature and speed for which this fan is designed must not be exceeded. These limits are given in this manual. Personnel who will operate this fan, or those who will perform maintenance thereon, must be given a copy of this manual to read, and be warned of the potential hazards of this equipment. This manual contains general recommendations, but attention must also be paid to the specific safety requirements which apply to the individual installation. Such requirements are outlined in federal, state and local safety codes. Strict compliance with these codes, as well as strict adherence to installation instructions, are the responsibility of the user and are necessary to the safe operation of this fan.

Bearing assemblies and drive couplings must be covered so that no rotating element can snag clothing or skin.

Shaft cooling wheels or any other rotating part must be covered.

Any open sheave, pulley, sprocket, belt, chain, and other similar transmission device must be enclosed by guards.

Another potential hazard is the ability of the fan to convey loose material which can be a projectile. Ducts must be protected to prevent objects from entering the airstream. Place suitable guards over inlets and outlets of fans to prevent the entrance of clothing or flesh into the rotating parts.

Vibration limiting switches should be provided to detect sudden changes in the operation of the fan, especially when operating a fan under high temperature or in an extremely corrosive atmosphere.

The housing access doors must not be opened when the fan is in operation. Those on the discharge side of the fan can explode when unbolted.

Proper protection from electrical start of the fan during maintenance is required. A disconnect switch provided with a padlock to prevent operation of the fan is required. In addition, a disconnect switch should be located at the fan for use by personnel working on the fan.

2 FAN OPERATION

2.1 Initial Startup

The following general check lists should act as an aid to the operation of the fans. It is not intended to cover all contingencies and it is assumed that the installing contractor is experienced with this type of equipment, and will follow all good initial startup procedures.

2.2 Fan Operation

Equipment must be installed in accordance with BALTEC instructions and those of the manufacturers of components, and a check must be made for tightness of all hardware and mounting bolts. The fan will then be ready to operate after final safety checks to prevent injury to personnel or damage to the equipment.

1. Lock out power source.
2. Check bearings for cleanliness, burrs and corrosion.
3. Check foundation bolts for tightness.
4. Check inside of housing and duct work for extraneous matter and debris. Secure all access doors.
5. Check wheel position for proper clearance at inlet.
6. Turn wheel by hand, if possible, to see that it rotates freely.
7. Start fan with driver and check for proper rotation direction.
8. Start equipment in accordance with recommendations of BALTEC IES of starting equipment and driver unit.
9. Allow unit to reach full speed, then shut down. During this short period check for vibration or any unusual noise. If any are observed, locate the cause and correct.
10. Lock the power source in “OFF” position.
11. Recheck for tightness of hold down bolts, all set screws and keys, and tighten if necessary. Initial start up has a tendency to relieve the tightness of nuts, bolts and set screws.

Assuming unit operates satisfactorily, the run-in period must be at least eight hours. Observe bearings a minimum of once each hour during the first eight hours of operation. There need be no concern if the bare hand can be held on the bearing for one second on ambient air fans.

Check the equipment for vibration. If vibration is excessive, stop the fan and determine the cause of vibration. Do not operate until cause has been corrected. See Trouble Shooting Guide, Pages 11-12.

2.3 Fan Balance

Heavy rotors and high speeds make dynamic balancing a necessity. This balancing is carefully done at our plant by experienced personnel. Occasionally, mishaps in transportation,handling, operation, or wear, will necessitate rebalancing in the field. The impeller must be rebalanced when mounted on a soft foundation and coupled to its own driver to suit the foundation peculiarities. However, fan motors cannot be balanced or operated on weak or inadequately supported foundations.

Balancing impellers is a delicate operation and requires specialized knowledge, experience, and careful procedures. A balance weight of a few grams incorrectly placed may cause serious damage. For these reasons we strongly recommend that an experienced Chicago Blower factory representative be contacted.

2.4 Bearing Vibration Limits

Running fan(s) with high vibration could result in personal injury or property damage.

Vibration amplitudes shown are peak velocity, inches/sec. and are measured in all three planes on bearing housings; vertical, horizontal and axial. See Table 2.

ALARM values are a warning that vibration must be corrected at the earliest possible moment (short term hours).Long term operation, at or exceeding ALARM values, greatly reduces rotor and bearing life/hours and voids the Chicago Blower warranty.

SHUT-DOWN limit signals hazardous operation and requires immediate repair. Operation at this limit could result in injury or property damage.

Table 2 – Vibration Limits for fan during operation.

		Vibration Limit (mm/s)			
ACMA Fan Category	**Balance Grade**	**Factory Tested**	**Field Startup**	**Field Alarm**	**Field Shutdown**
BV-3	G6.3	3.81	6.35	10.16	12.7

NOTES:

1. Vibration Limits are for a fully assembled fan, rigidly mounted.
2. Values are peak velocity (filter out) at fan rotational speed
3. Field vibration level of a fan is not solely dependent upon the balance grade. Installation factors and the mass and stiffness of the supporting system will influence the field vibration level. Therefore, field vibration is not the responsibility of the fan manufacturer.

2.5 Vibration Detection Procedure

For causes of vibration, see the trouble shooting guide on page 11-12.

To insure long life and trouble-free service, a frequent and regular check of all equipment should be made. A preventative maintenance schedule is a necessity for an extended fan life.

After approximately one (1) month of operation, all bolts for base, hub, bearing, pedestal, etc. should be retightened.

Potentially damaging conditions are often signalled in advance by changes in vibration and sound. A simple, regular audio-visual inspection of fan operation leads to correction of the condition before expensive damage occurs. Vibration levels should be checked by an approved technician using electronic vibration equipment.

Should vibration become problematic, vibration sensors can be attached to the fan in order to measure vibration in the directions shown in figure 1. Ideal locations for sensor mounting is shown in figure 2, with these positions being dependant on size of sensor and design of fan casing.

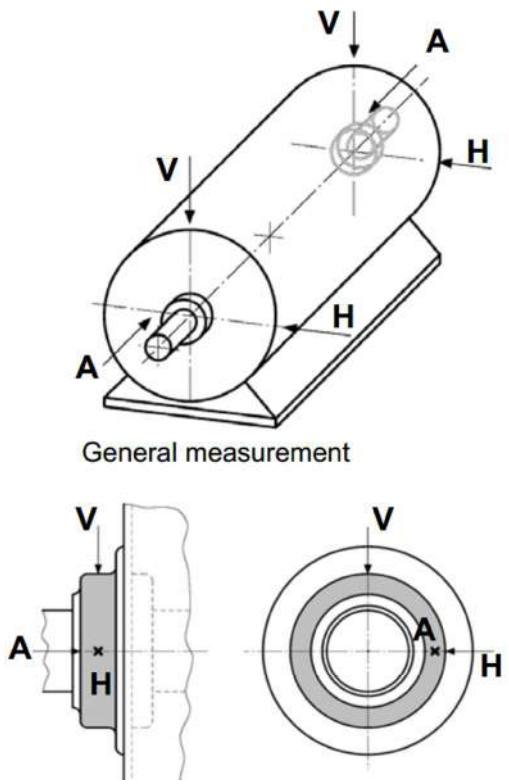

Figure 1 – Vibration measurement directions:
A – Axial
V – Vertical
H - Horizontal

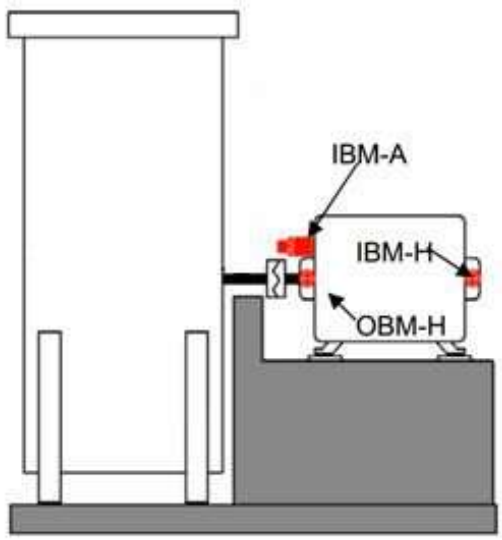

Figure 2 – Vibration sensor ideal locations

Accelerometer Mounting must be as close as possible to the bearing and as close as possible to the centreline. In addition, the accelerometer is firmly attached with a magnet on an even surface which is free of debris, rust and flaking paint. Mounting guidelines are illustrated in figure 3 below.

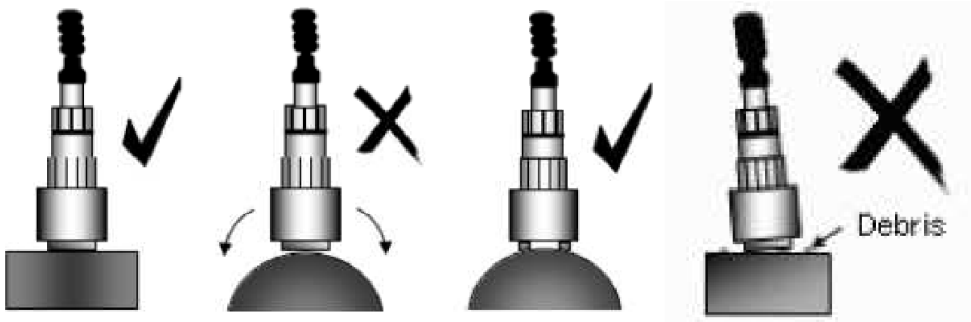

Figure 3 – Sensor mounting guidelines

2.6 Lubrication

The bearings fitted to the fan motors are sealed for life and no regular lubrication is required during operation.

3 TROUBLE-SHOOTING GUIDE

PROBLEM	CAUSE	REMEDY
VIBRATION	The most common cause of vibration problems is an out of balance fan wheel or rotor.	Check the wheel for dirt or foreign material, especially hard-to-see places like the backside of the wheel and the underside of the blades. Airfoil blades are usually hollow. When exposed to rain or excessive moisture, they can get water inside of them. Drilling one 3/16" drain hole in the upper surface of each blade near the trailing edge should cure the problem. Rebalancing is usually not necessary. Inspect the wheel for erosion or corrosion. Usually wheel erosion will occur at the leading edge of the blade. On a paddle wheel type fan the outer blade tip may also be worn. An airfoil wheel exposed to sand or abrasive dust can actually develop pin holes in the leading edge of the blade. Do all you can to eliminate these damaging conditions and then rebalance the wheel. If the wheel is seriously damaged it will have to be replaced.
	Improper or loose mounting.	Foundation bolts and motor mounting bolts can loosen themselves. Make sure they are tight.
	Loose set screws that hold the wheel to the shaft.	Again tighten the screws, but first be certain the wheel hasn’t shifted on the shaft or is rubbing on the inlet cone or drive side of the housing.
	Bent motor shaft.	First, check the shaft with a dial indicator. If bent, the motor armature assembly or the whole motor should be replaced as soon as possible to avoid replacing the entire fan.
	Fan wheel turbulence due to the rotor running backwards.	Since blade angles and shapes vary greatly, it is easy to misread rotor direction. Check for correct wheel rotation, clockwise or counterclockwise, as seen from the drive side.
	Air pulsation.	Fan may be operating in the stall area of its performance curve. That means it is oversized for your particular system or the system resistance is higher than intended. You can lower the system resistance by opening the dampers further (if possible).

NOISE	Foreign material in the fan housing. Worn ball or roller bearings (howling, screeching or clicking). If the fan housing has a metal shaft seal, it could be misaligned and rubbing on the shaft.	This could be anything from a loosened bolt to somebody's lunch bag. Inspect the wheel and inside of fan housing and clean thoroughly. Change the bearings immediately before they cause additional damage. Failing bearings tend to wear the shaft, so you want to be absolutely certain the shaft is full size before installing new bearings. "Mike" the shaft under the bearing and next to it and compare the two readings. If they don't match, replace the motor armature assembly. New bearings installed on a worn shaft will not last long. Loosen seal plate bolts, recenter the seal on the fan shaft and tighten the bolts. If the seal is fiberglass, cork or rubber, be sure the metal backing plate does not touch the shaft.
OVERHEATED BEARINGS	Motor bearings may be worn and failing Bearing exposed to "heat soak" from an oven or dryer after shutdown.	Replace the bearings. Remember to also check the shaft (refer back to the NOISE section) "Heat soak" occurs when a fan is idle and its shaftcooling wheel can no longer prevent heat from reaching the inboard bearing. Heat from inside the fan can then actually cook the grease. Continue to run the fan for 15 minutes after the heat is removed. This will cool the fan shaft and protect the bearing.
POOR AIR PERFORMANCE	Fan rotation incorrect. Fan horsepower unexpectantly low. Fan horsepower unexpectantly high.	Refer to the Vibration section on the previous page. An easy way to change rotation on most 3-phase motors is to reverse any two motor leads. Correct one or more of the following conditions. • Fan drive sheaves set too low for fan speed. • Resistance to airflow, such as a closed damper, much higher than calculated. Be sure the fan speed is not too high. Fan may be operating without ductwork at low resistance so that too much air is flowing. The fan may be handling ambient air when it was originally intended for hot, less dense air. Fan may be running backwards

APPENDIX A – FAN & MOTOR DATA SHEET

Fans Direct

Phone : 0423 570 122
Fax : 03-9773 3822

Customer : Baltec Inlet and Exhaust Systems
Project : PO 8312-31798, Seal Air Fans
Item 1 - Ref :

Quote Ref : C0783
29/01/2013

Fluid Properties :

Barom Pressure :	101.325	kpa
Operating Temp :	20	Deg.C.
Humidity :	50	%
Specific Gravity :	1	
Inlet Density :	1.2001	Kg/m3

Duty Required :

Inlet Volume Flow :	3000	m3/hr
Inlet Pressure :	-0	kpa
Outlet Pressure :	6	kpa

Fan Selected :

SWSI-D53 F3 Size 546-88%

Speed :	2940	Rpm
Wheel Diameter :	546	mm

Fan Shaft Power :

@ 20 Deg C :	6.74	kW
@ Duty Temp :	6.74	kW
Tip Speed :	84.1	m/s
Inlet Velocity :	22.1	m/s
Outlet Velocity :	29.2	m/s
Temp Rise :	6.7	Deg.C.

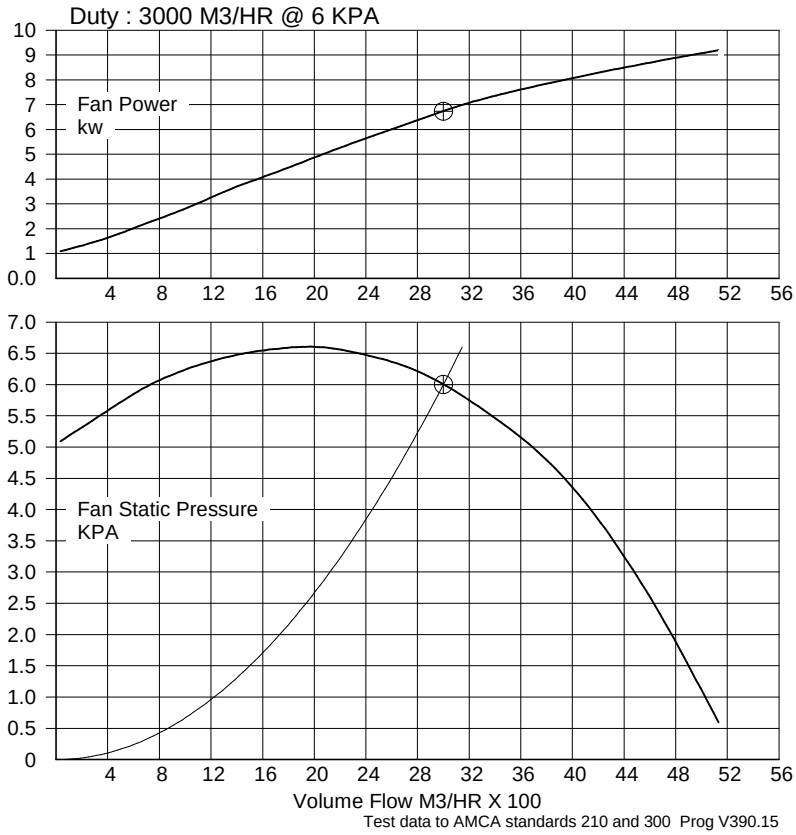

Test data to AMCA standards 210 and 300 Prog V390.15

Noise Details :	63 Hz	125 Hz	250 Hz	500 Hz	1 kHz	2 kHz	4 kHz	8 kHz	**Total**
Internal SWL dB	102	106	101	96	90	87	81	79	**109**
# Free Inlet SPL dBA	45	63	69	69	64	66	63	60	**74**
Free Outlet SPL dBA	46	66	74	79	79	77	71	67	**84**
Outside Casing dBA	52	65	64	65	62	60	54	48	**71**

With Silencer

Motor noise is NOT included in the figures above. Average dBA for Motor at 1 metre is 67

Sound Pressure levels (SPL) assume Free Field Hemispherical Radiation at 1 metre(s)
Breakout at 1 metre from 3 mm thick casing(inside Near Field range).
Casing levels assume the inlet / outlet are ducted and noise does not breakout through duct.
All values are averages. Free Inlet assumes that outlet is ducted and vice versa.

	No.: C0783
	Date: 29-JAN-2013

Customer : Baltec

TECHNICAL PROPOSAL

Three-phase induction motor - Squirrel cage rotor

Product line : W21 Industrial Motor - Aluminium Multimounting Frame - Premium Efficiency E2

Catalog Number :
List Price : $

Notes:

Performed by:	Checked:

No.:	C0783
Date:	29-JAN-2013

DATA SHEET

Three-phase induction motor - Squirrel cage rotor

Customer	:	Baltec
Product line	:	W21 Industrial Motor - Aluminium Multimounting Frame - Premium Efficiency E2

Frame	:	132S
Output	:	7.5 kW
Frequency	:	50 Hz
Poles	:	2
Full load speed	:	2915
Slip	:	2.83 %
Voltage	:	415 V
Rated current	:	13.8 A
Locked rotor current	:	93.8 A
Locked rotor current (Il/In)	:	6.8
No-load current	:	6.50 A
Full load torque	:	24.6 Nm
Locked rotor torque	:	240 %
Breakdown torque	:	310 %
Design	:	N
Insulation class	:	F
Temperature rise	:	80 K
Locked rotor time	:	13 s (hot)
Service factor	:	1.00
Duty cycle	:	S1
Ambient temperature	:	-20°C - +40°C
Altitude	:	1000
Degree of Protection	:	IP55
Approximate weight	:	63 kg
Moment of inertia	:	0.01979 kgm²
Noise level	:	67 dB(A)

	D.E.	N.D.E.
Bearings	6308 ZZ	6207 ZZ
Regreasing interval	---	---
Grease amount	---	---

Load	Power factor	Efficiency (%)
100%	0.85	88.7
75%	0.79	88.3
50%	0.67	87.3

Notes:

Determining losses and efficiency according to IEC 34-2 A.

Performed by	Checked

	No.: C0783
	Date: 29-JAN-2013

PERFORMANCE CURVES RELATED TO RATED OUTPUT

Three-phase induction motor - Squirrel cage rotor

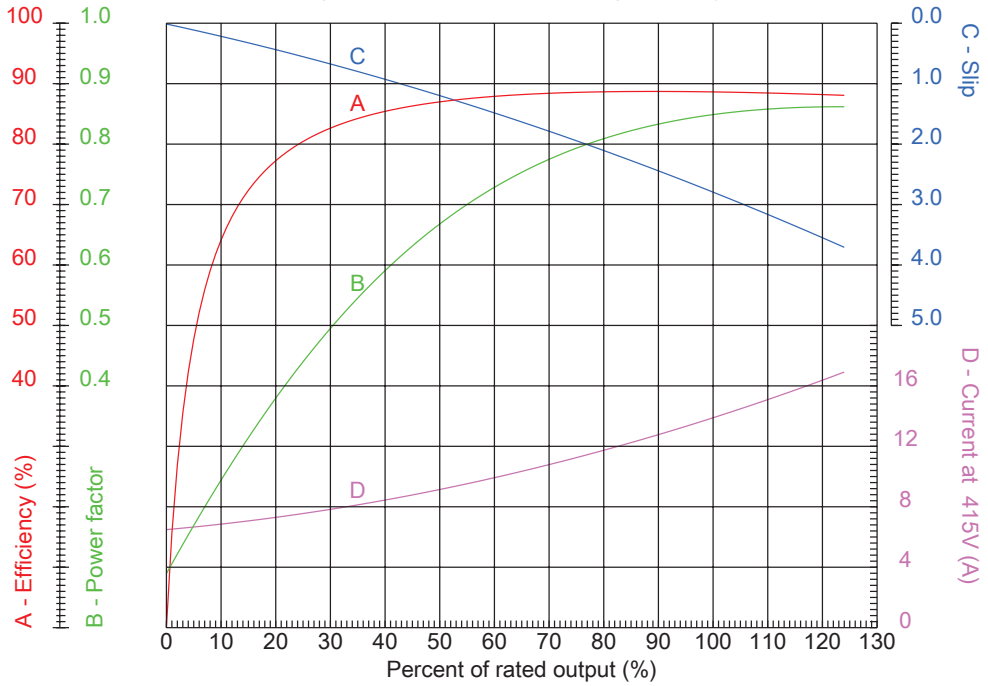

Customer	: Baltec
Product line	: W21 Industrial Motor - Aluminium Multimounting Frame - Premium Efficiency E2

Frame	: 132S	Locked rotor current (Il/In)	: 6.8
Output	: 7.5 kW	Duty cycle	: S1
Frequency	: 50 Hz	Service factor	: 1.00
Full load speed	: 2915	Design	: N
Voltage	: 415 V	Locked rotor torque	: 240 %
Rated current	: 13.8 A	Breakdown torque	: 310 %
Insulation class	: F		

Notes:

Performed by	Checked

No.: C0783	
Date: 29-JAN-2013	

CHARACTERISTIC CURVES RELATED TO SPEED

Three-phase induction motor - Squirrel cage rotor

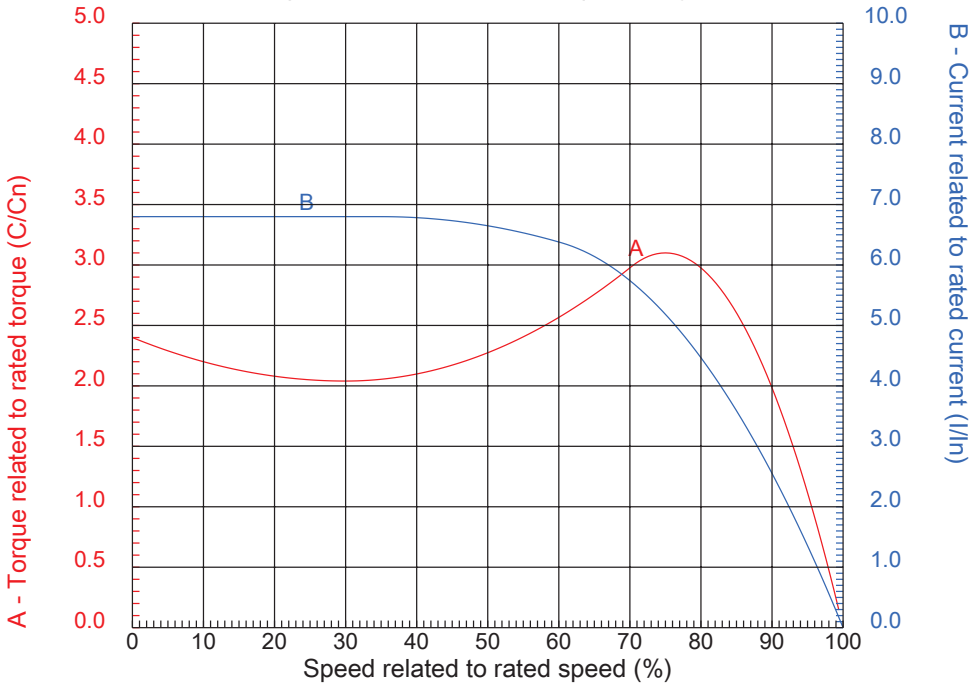

Customer	: Baltec
Product line	: W21 Industrial Motor - Aluminium Multimounting Frame - Premium Efficiency E2

Frame	: 132S	Locked rotor current (Il/In)	: 6.8
Output	: 7.5 kW	Duty cycle	: S1
Frequency	: 50 Hz	Service factor	: 1.00
Full load speed	: 2915	Design	: N
Voltage	: 415 V	Locked rotor torque	: 240 %
Rated current	: 13.8 A	Breakdown torque	: 310 %
Insulation class	: F		

Notes:

Performed by	Checked

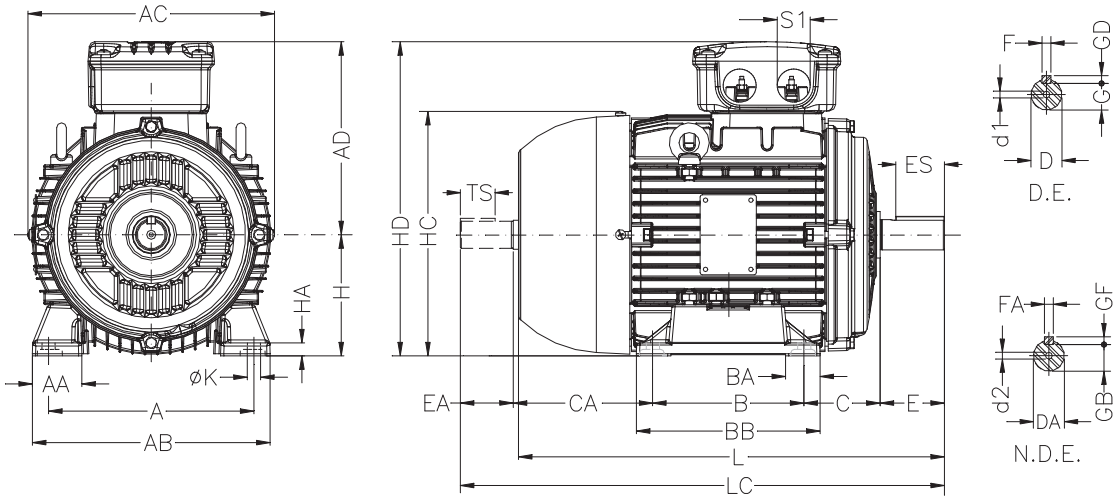

Notes:

A 216	AA 44	AB 248	AC 270	AD 212
B 140	BA 37	BB 170	C 89	CA 150
D 38k6	E 80	ES 63	F 10	G 33
GD 8	DA 28j6	EA 60	TS 45	FA 8
GB 24	GF 7	H 132	HA 12	HC 274
HD 344	K 12	L 490	LC 557	S1 M25X1,5
d1 DM12	d2 DM10			

Performed by:

Checked:

Customer: Baltec

W21 Industrial Motor - Aluminium Multimounting Frame - Premium Efficiency E2

Three-phase induction motor

Frame 132S - IP55

29-JAN-2013

C0783

OPERATION
&
MAINTENANCE MANUAL

For

Vogt Power International Inc.
Heat Recovery Steam Generators

For

SPP ABPR Amata City CCCP Project
Amata B. Grimm Power (Rayong) 2 Limited

Vogt Power Project No. 17460

Vogt Document No. V17460-OMNE-001

VOLUME 4

OPERATION & MAINTENANCE MANUAL

For

Vogt Power International, Inc.
Heat Recovery Steam Generators

for

SPP ABPR Amata City CCCP Project
Amata B. Grimm Power (Rayong) 2 Limited

Vogt Power Project No. 17460

Vogt Power Document No. V17460-OMNE-001

Written By: Kathy Hugle

Reviewed By: Matt Kreis

Revision: 1
Date: 19 February 2013

The purpose of this manual is to suggest procedures for the operation and maintenance of the HRSG and its subsidiary parts. This guide does not cover all variations in equipment, nor does it provide for every possible requirement or contingency. The specific site conditions, staffing, accessibility, and interfacing equipment must be considered when implementing the information provided herein.

Refer to the Vogt Power International Erection Manual for specific information concerning unloading, storage, and installation of the equipment. Refer to the Vogt Power International Training Manual for operator training. Should other information be desired, or particular situations arise that are not addressed in this manual, the matter should be referred to Vogt Power International.

This manual describes the HRSG, its components and ancillaries to aid the Owner in its development of appropriate procedures for operating and maintaining the equipment. It also contains specific design and performance information, including drawings, equipment lists, and data sheets, purely for convenience. However, this document is not contractual, and should not be referred to in contractual matters.

This document contains minimum procedures for operating and maintaining the HRSG components and is intended to assist the operators in planning and scheduling operational and maintenance activities. It is not intended to and does not cover all details or variations in equipment, or provide for every possible contingency.

INDEX

VOLUME 1 – Vogt Power HRSG O&M Manual

SECTION I DESIGN DATA

Tab 1 - Drawing and Document List
Tab 2 - System Design Description
Tab 3 - Safety Valve Data
Tab 4 - Performance Data
Tab 5 - Start-up Procedure
Tab 6 - Gas Side Pressure Drop
Tab 7 - Heating Surface Data
Tab 8 - Boiler Feedwater and Boiler Water
Tab 9 - Performance Prediction

SECTION II OPERATIONAL PROCEDURES

Tab 1 - Safety Precautions
Tab 2 - Suggested Operational Procedure
Tab 3 - Removal from Service, Lay-up, and Long Term Storage
Tab 4 - Tube Failure Analysis
Tab 5 - Troubleshooting Procedures
Tab 6 - Maintenance Checklists
Tab 7 - Pressure Part Life
Tab 8 - Warranty, Inspection and Maintenance Reports and Forms

SECTION III COMMISSIONING PROCEDURES

Tab 1 - Preliminary Filling and Flushing
Tab 2 - Hydrostatic Test
Tab 3 - Alkaline Boilout
Tab 4 - Chemical Cleaning
Tab 5 - Steam Blow Cleaning
Tab 6 - Commissioning

SECTION IV SUBVENDOR MANUALS

Volume 2 – Diverter Damper

Volume 3 – Valves and Inline Components

Tab 1 - Control Valves
Tab 2 - Safety Valves
Tab 3 - General Service Valves
Tab 4 - General Service Valve Actuators
Tab 5 - Strainers
Tab 6 - Steam Sample Nozzles
Tab 7 - Instrument Valves
Tab 8 - Attemperators

Volume 4 – Instrumentation

Tab 1 - Transmitters
Tab 2 - Level Gauges and Remote Level Indicators
Tab 3 - Thermocouples & Temperature Indicators
Tab 4 - Pressure Gauges & DP Gauges

Volume 5 – Deaerator & Heat Exchanger

Tab 1 - Deaerator
Tab 2 - Heat Exchanger

Volume 6 – Miscellaneous Equipment

Tab 1 - Outlet Expansion Joints
Tab 2 - Inlet Expansion Joints
Tab 3 - Steam Silencers
Tab 4 - Pipe Supports
Tab 5 - Flow Elements
Tab 6 - Aircraft Warning Lights
Tab 7 - Stack Silencers

Instruction

MI IDP10-T
May 2010

I/A Series® Pressure Transmitters

IDP10 Differential Pressure with HART Communication

Installation, Operation, Calibration, Configuration, and Maintenance

VOGT POWER INTERNATIONAL	
Released, Work May Proceed	
Hugle, Kathy	Nov-21-2011

VOGT POWER INTERNATIONAL
V17460-ICXE-523-00
08-Nov-2011

invensys
Foxboro®

Contents

Figures v

Tables vi

1. Introduction 1

General Description 1

Reference Documents 1

Transmitter Identification 3

Standard Specifications 5

Product Safety Specifications 10
- ATEX and IECEx Warnings 13
- ATEX Compliance Documents 13
- IECEx Compliance Documents 14

2. Installation 15

Transmitter Mounting 15
- Process Mounting 15
- Manifold Mounted Transmitter 17
- Transmitter Mounted on a Coplanar‰ Manifold 18
- Pipe or Surface Mounting 18
  - Standard Mounting Bracket 18
  - Universal Mounting Bracket 20

Venting and Draining 23
- Traditional Structure 23
- LP1 Low Profile Structure 23
- LP2 Low Profile Structure 24

Installation of Flow Measurement Piping 24

Filling System with Seal Liquid 27

Positioning the Housing 28

Positioning the Display 28

Setting the Write Protect Jumper 29

Cover Locks 29

Wiring 29
- Accessing Transmitter Field Terminals 30
- Wiring the Transmitter to a Control Loop 30
- Multidrop Communication 33
- Connecting the Transmitter to an I/A Series System 34

Putting a Differential Pressure Transmitter Into Operation 35

Taking a Differential Pressure Transmitter Out of Operation 35

3. Operation Via Local Display **37**
Entering Numerical Values 38
Reranging 39
Viewing the Database 39
Viewing the Pressure Range 39
Testing the Display 39
Error Messages 40

4. Calibration **41**
General Calibration Notes 41
Calibration Setup 43
Setup of Electronic Equipment 44
Field Calibration Setup 44
Bench Calibration Setup 45
Calibration Using a PC20 46
Calibration Using a PC50 46
Calibration Using a HART Communicator 46
Calibration Using the Optional Local Display 46
Zero Adjustment Using External Zero Button 49
Error Messages 51

5. Configuration **53**
Configurable Parameters 53
Configuration Using a PC20 54
Configuration Using a PC50 54
Configuration Using a HART Communicator 54
Configuration Using the Optional Local Display 54
Character Lists 64
Error Messages 65

6. Maintenance **67**
Error Messages 67
Parts Replacement 67
Replacing the Terminal Block Assembly 67
Replacing the Electronics Module Assembly 68
Removing and Reinstalling a Housing Assembly 69
Adding the Optional Display 70
Replacing the Sensor Assembly 70
Rotating Process Covers for Venting 72

Index **75**

Figures

1 Transmitter Identification 3
2 Top Level Structure Diagram 4
3 Minimum Allowable Absolute Pressure vs. Process Temperature with Fluorinert Fill Fluid 7
4 Typical Mounting of an IDP10 Transmitter Supported by Process Piping 16
5 Typical Mounting of an IDP10 Transmitter Supported by a Bypass Manifold 17
6 Typical Mounting of IDP10 Transmitter on Coplanar Manifold 18
7 Pipe or Surface Mounted Transmitter Using a Standard Bracket 19
8 Examples of Mounting With a Standard Bracket 19
9 Details of a Universal Bracket 20
10 Mounting a Transmitter with Traditional Structure Using a Universal Bracket 21
11 Vertical Pipe Mounting a Transmitter with LP2 Structure Using a Universal Bracket 21
12 Horizontal Mounting a Transmitter with LP2 Structure Using a Universal Bracket 22
13 Vertical Mounting - Cavity Draining 23
14 Vertical Mounting - Cavity Venting 23
15 Horizontal Mounting - Cavity Venting 23
16 Vertical Mounting - Cavity Venting 24
17 Horizontal Mounting - Cavity Venting and Draining 24
18 Cavity Venting and Draining 24
19 Example of Horizontal Process Line Installation 26
20 Example of Vertical Process Line Installation 27
21 Housing Screw or Clip Location 28
22 Cover Lock Location 29
23 Accessing Field Terminals 30
24 Identification of Field Terminals 30
25 Supply Voltage and Loop Load 31
26 Loop Wiring Transmitters 33
27 Wiring Several Transmitters to a Common Power Supply 33
28 Typical Multidrop Network 34
29 Local Display Module 37
30 Top Level Structure Diagram 38
31 Display Test Segment Patterns 40
32 4 to 20 mA Output Calibration Setup of Electronic Equipment 44
33 Field Calibration Setup 45
34 Bench Calibration Setup 46
35 Calibration Structure Diagram 48
36 Calibration Structure Diagram (Continued) 49
37 Configuration Structure Diagram 57
38 Configuration Structure Diagram (Continued) 58
39 Configuration Structure Diagram (Continued) 59
40 Replacing the Electronics Module Assembly and Display 69
41 Replacing the Sensor Assembly 71
42 Replacing the Sensor Assembly (pvdf Inserts) 72
43 Sensor Cavity Venting and Draining 72

Tables

1 Reference Documents 1
2 Minimum Loop Load and Supply Voltage Requirements 9
3 Electrical Safety Specifications 12
4 Operation Error Messages 40
5 Calibration Menu 47
6 Calibration Error Messages 51
7 IDP10-T Configurable Parameters 53
8 Configuration Menu 55
9 Alphanumeric Character List 64
10 Numeric Character List 64
11 Configuration Error Messages 65

1. Introduction

General Description

The IDP10-T intelligent differential pressure transmitters measure the difference between two pressures applied to opposite sides of a silicon strain gauge microsensor within the sensor assembly. This microsensor converts differential pressure to a change in resistance. The resistance change is then converted to a 4 to 20 mA or digital signal proportional to differential pressure or to the square root of differential pressure. This measurement signal is transmitted to remote receivers over the same two wires that supply power to the transmitter electronics. These wires also carry two-way data signals between the transmitter and remote communication devices.

The transmitter allows direct analog connection to common receivers while still providing full Intelligent Transmitter Digital Communications using a HART Communicator.

The transmitter is often used for measuring fluid flow rates across a primary device such as an orifice plate, but can also be used for other types of differential pressure measurements such as liquid level, interface level, or density measurements. The IDP10 can also be supplied with direct connected or remote pressure seals to isolate the measuring element from corrosive or viscous fluids.

For more detailed information on the principle of operation of the transmitter, refer to document TI 037-096, available from Invensys.

Reference Documents

Table 1. Reference Documents

Document	Description
Dimensional Prints	
DP 020-342	Dimensional Print – PSFLT Pressure Seals
DP 020-343	Dimensional Print – PSFPS and PSFES Pressure Seals
DP 020-345	Dimensional Print – PSFAR Pressure Seals
DP 020-347	Dimensional Print – PSTAR Pressure Seals
DP 020-349	Dimensional Print – PSISR Pressure Seals
DP 020-351	Dimensional Print – PSSCR Pressure Seals
DP 020-353	Dimensional Print – PSSCT Pressure Seals
DP 020-354	Dimensional Print – PSSSR Pressure Seals
DP 020-355	Dimensional Print – PSSST Pressure Seals
DP 020-446	Dimensional Print – IDP10, IDP25, and IDP50 Differential Pressure Transmitters
DP 022-335	Dimensional Print – Model CO Compact Orifice
Parts Lists	
PL 006-172	Parts List – Model CO Compact Orifice

Table 1. Reference Documents (Continued)

Document	Description
PL 009-005	Parts List – IDP10 Differential Pressure Transmitter
Instructions	
MI 020-328	Instruction – Bubble Type Installation for Liquid Level
MI 020-329	Instruction – High Accuracy Flow Measurement
MI 020-366	Instruction – I/A Series Intelligent Pressure Transmitters Operation, Configuration, and Calibration Using a HART Communicator
MI 020-369	Instruction – Pressure Seals
MI 020-427	Instruction – Intrinsic Safety Connection Diagrams and Nonincendive Circuits
MI 020-495	Instruction – PC20 Intelligent Transmitter Configurator
MI 020-501	Instruction – PC50 Intelligent Field Device Tool (Installation and Parts List)
MI 020-505	Instruction – PC50 Intelligent Field Device Tool (Operation Using HART Protocol)
MI 020-520	Instruction – PC50 Intelligent Field Device Tool with Advanced DTM Library (Operation Using HART Protocol)
MI 022-138	Instruction – Bypass Manifolds - Installation and Maintenance
MI 022-335	Instruction – Model CO Compact Orifice
Technical Information	
TI 1-50a	Technical Information – Liquid Density Measurement
TI 001-051	Technical Information – Liquid Interface Measurement
TI 001-052	Technical Information – Liquid Level Measurement
TI 37-75b	Technical Information – Transmitter Material Selection Guide
TI 037-097	Technical Information – Process Sealing of I/A Series Pressure Transmitters for use in Class 1, Zone 0, 1, and 2 Hazardous Locations

Transmitter Identification

See Figure 1 for transmitter data plate contents. For a complete explanation of the Model Number code, see the parts list. The firmware version is identified on the top line of the display when **VIEW DB** (View Database) is selected in the top level structure (see Figure 2).

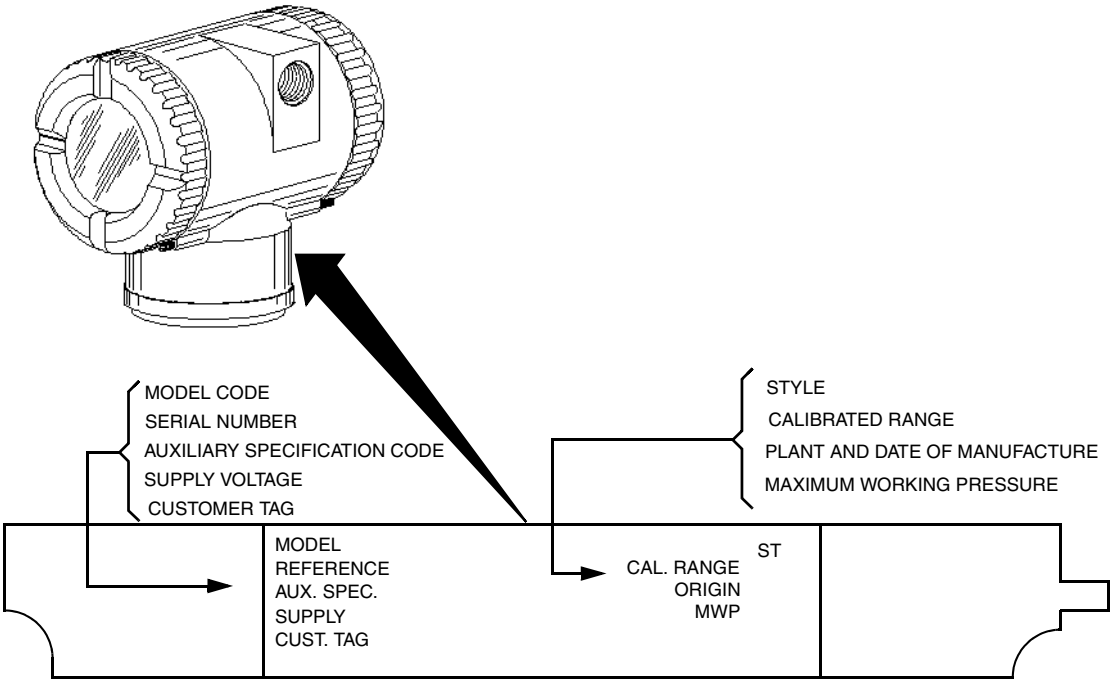

Figure 1. Transmitter Identification

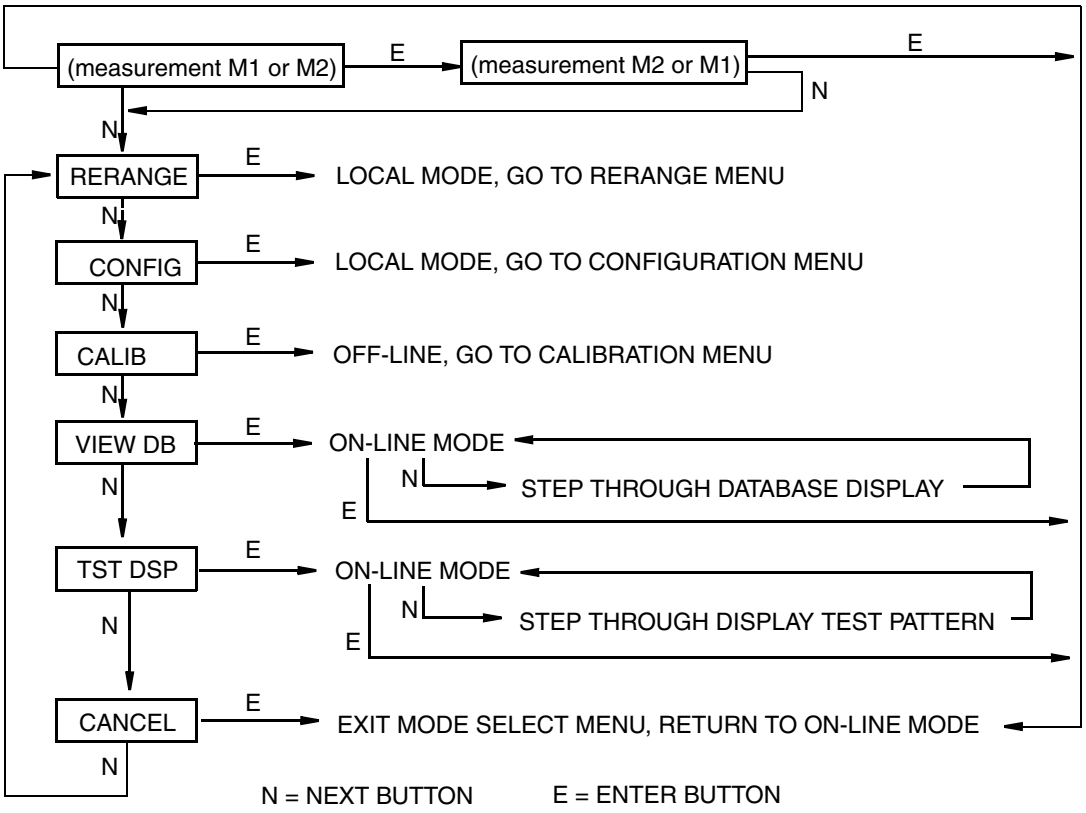

Figure 2. Top Level Structure Diagram

Standard Specifications

Operative Limits

Influence	Operative Limits
Sensor Body Temperature[a] Silicone Fill Fluid Fluorinert Fill Fluid pvdf Inserts	 -46 and +121°C (-50 and +250°F) -29 and +121°C (-20 and +250°F) -7 and +82°C (20 and 180°F)
Electronics Temperature With LCD Display	-40 and +85°C (-40 and +185°F) -40 and +85°C (-40 and +185°F)[b]
Relative Humidity	0 and 100%
Supply Voltage	11.5 and 42 V dc
Output Load[c]	0 and 1450 ohms
Mounting Position	No Limit
Vibration	6.3 mm (0.25 in) double amplitude from 5 to 15 Hz with aluminum housing and from 5 to 9 Hz with 316 ss housing. 0 to 30 m/s (0 to 3 "g") from 15 to 500 Hz with aluminum housing and 0 to 10 m/s (0 to 1 "g") from 9 to 500 Hz with 316 ss housing.

(a) Refer to MI 020-369 for temperature limits with pressure seals.

(b) Display updates are slowed and readability decreased at temperatures below -20°C (-4°F).

(c) 250 Ω minimum load is required for communication with a HART Communicator.

Span and Range Limits

Span Limit Code	Span Limits ΔP	Range Limits ΔP [a]
A[b]	0.12 and 7.5 kPa 0.5 and 30 inH_20 12 and 750 mmH_20	-7.5 and +7.5 kPa -30 and +30 inH_20 -750 and +750 mmH_20
B	0.87 and 50 kPa 3.5 and 200 inH_20 87 and 5000 mmH_20	-50 and +50 kPa -200 and +200 inH_20 -5000 and +5000 mmH_20
C	7.0 and 210 kPa 28 and 840 inH_20 2.3 and 69 ftH_20	-210 and +210 kPa -840 and +840 inH_20 -69 and +69 ftH_20
D	0.07 and 2.1 MPa 10 and 300 psi 23 and 690 ftH_20	-0.21 and +2.1 MPa -30 and +300 psi -69 and +690 ftH_20
E	0.7 and 21 MPa 100 and 3000 psi	-0.21 and +21 MPa -30 and +3000 psi

(a) Negative values of differential pressure indicate a higher pressure on the **low side** of the sensor. Positive values indicate a higher pressure on the **high side** of the sensor.

(b) Span Limit Code "A" not available with pressure seals.

Maximum Static, Overrange, and Proof Pressure

Transmitter Configuration (Bolting Material)[c]	Maximum Static and Overrange Pressure Rating[a,e,f]		Proof Pressure Rating[b]	
	MPa	Psi	MPa	Psi
Standard (B7 steel), Option "-B2" (17-4 PH ss), Option "-D3" or "-D7"	25	3625	100	14500
Option "B1" (316 ss) or Option "-D5"	15	2175	60	8700
Option "B3" (B7M)	20	2900	70	11150
Option "-D1"	16	2320	64	9280
Option "-D2", "-D4", "-D6", or "-D8"[d]	10	1500	40	6000
Option "-D9" (17-4 PH ss)	40	5800	100	14500

(a) Either side can be at higher pressure during overrange.

(b) Meets ANSI/ISA Standard S82.03-1988.

(c) -D1 = DIN Single ended process cover with M10 B7 bolting.
-D2 = DIN Double ended process cover with M10 B7 bolting
-D3 = DIN Single ended process cover with 7/16 in B7 bolting.
-D4 = DIN Double ended process cover with 7/16 in B7 bolting.
-D5 = DIN Single ended process cover with 7/16 in 316 ss bolting.
-D6 = DIN Double ended process cover with 7/16 in 316 ss bolting.
-D7 = DIN Single ended process cover with 7/16 in 17-4 ss bolting.
-D8 = DIN Double ended process cover with 7/16 in 17-4 ss bolting
-D9 = DIN Single ended process cover with 7/16 in 17-4 ss bolting.

(d) Limited to operating temperatures ranging from 0 to 60°C (32 to 140°F).

(e) When Structure Codes 78/79 are used (pvdf inserts in the Hi and Lo side process covers), the maximum overrange is 2.1 MPa (300 psi) and temperature limits are -7 and +82°C (20 and 180°F).

(f) Static pressure rating of 40 MPa (5800 psi) with Option Code -Y.

NOTE

Static pressure zero shift for all calibrated spans can be eliminated by readjusting the zero output at nominal operating static pressure.

CAUTION

1. Exceeding the maximum overrange pressure can cause damage to the transmitter degrading its performance.
2. The transmitter could be nonfunctional after application of the proof pressure.

Elevated Zero and Suppressed Zero

For applications requiring an elevated or suppressed zero, the maximum span and the upper and lower range limits of the transmitter can not be exceeded.

Sensor Fill Fluid

Silicone Oil (DC 200) or Fluorinert (FC-43)

Minimum Allowable Absolute Pressure vs. Process Temperature

With Silicone Fill Fluid:	At full vacuum: Up to 121°C (250°F)
With Fluorinert Fill Fluid:	Refer to Figure 3.

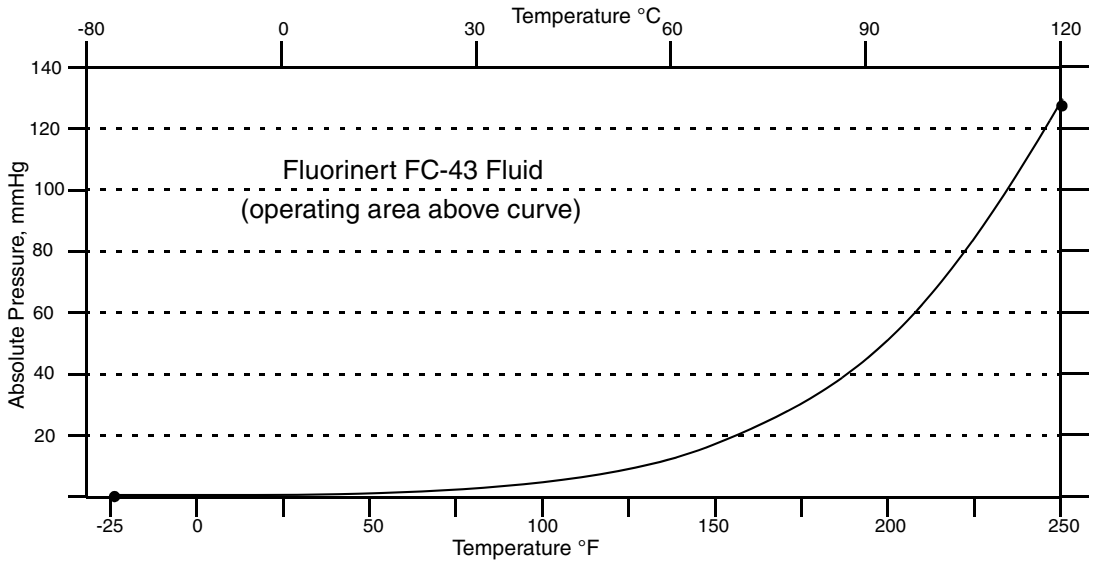

Figure 3. Minimum Allowable Absolute Pressure vs. Process Temperature with Fluorinert Fill Fluid

Mounting Position

The transmitter can be mounted in any orientation. It can be supported by the process piping. It can also be mounted directly to a vertical or horizontal pipe or surface mounted using an optional mounting bracket. The housing can be rotated up to one full turn to any desired position for access to adjustments, display, or conduit connections. See "Positioning the Housing" on page 28. The display (if present) can also be rotated in the housing to any of four different positions at 90° increments. See "Positioning the Display" on page 28.

NOTE

Position effect zero shift for all calibrated spans can be eliminated by readjusting zero output after installation.

Approximate Mass

Without Process Connectors	3.5 kg (7.8 lb)
With Process Connectors	4.2 kg (9.2 lb)
With Optional 316 ss Housing	Add 1.1 kg (2.4 lb)
With Pressure Seals	Varies with seal used

Process Connections

IDP10 transmitters are connected to the process via a 1/4 NPT thread or any one of a number of optional process connectors.

Process Wetted Materials

Diaphragm: 316L ss, Co-Ni-Cr, Hastelloy C, Monel, gold plated 316L ss, or tantalum
Covers and Process Connections: 316 ss, carbon steel, Hastelloy C, Monel, or pvdf inserts
Pressure Seals: Refer to MI 020-369

Process Pressure and Temperature Limits for Pressure Seals

Refer to MI 020-369

Electrical Connections

Field wires enter through 1/2 NPT, PG 13.5, or M20 threaded entrances on either side of the electronics housing. Leads terminate under screw terminals and washers on the terminal block in the field terminal compartment. To maintain RFI/EMI, environmental, and explosionproof ratings, unused conduit connection must be plugged with metal plug (provided), inserted to five full threads for 1/2 NPT connections; seven full threads for M20 and PG 13.5 connections.

Field Wiring Reversal

Accidental reversal of field wiring will not damage the transmitter, provided the current is limited to 1 A or less by active current limiting or loop resistance. Sustained currents of 1 A will not damage the electronics module or sensor but could damage the terminal block assembly and external instruments in the loop.

Adjustable Damping

The transmitter response time is normally 1.0 second or the electronically adjustable setting of 0.00 (none), 0.25, 0.50, 1, 2, 4, 8, 16, or 32 seconds, whichever is greater, for a 90% recovery from an 80% input step as defined in ANSI/ISA S51.1.

Output Signal

4 to 20 mA dc linear or 4 to 20 mA dc square root; software selectable. The output is remotely configurable from the HART Communicator and locally configurable with the pushbuttons on the display.

— NOTE

Only 4 to 20 mA linear output on absolute pressure, gauge pressure, and flange level transmitters.

Zero and Span Adjustments

Zero and span are adjustable from the HART Communicator. They are also adjustable at the transmitter using the display. An optional external self-contained moisture sealed pushbutton assembly allows local resetting of zero without removing the housing cover.

Power-up Time

Less than 2.0 seconds for output to reach the first valid measurement, then at the electronic damping rate to reach the final measured variable value.

Supply Voltage

Power supply must be capable of providing 22 mA when the transmitter is configured for 4 to 20 mA output. Ripple of up to 2 V pp (50/60/100/120 Hz) is tolerable, but instantaneous voltage must remain within specified range.

The supply voltage and loop load must be within specified limits. This is explained in detail in "Wiring" on page 29. A summary of the minimum requirements is listed in Table 2.

Table 2. Minimum Loop Load and Supply Voltage Requirements

	HART Communication	No HART Communication
Minimum Resistance	250 Ω	0
Minimum Supply Voltage	17 V	11.5 V

Electrical Ground Connections

The transmitter is equipped with an internal ground connection within the field wiring compartment and an external ground connection at the base of the electronics housing. To minimize galvanic corrosion, place the wire lead or contact between the captive washer and loose washer on the external ground screw. If shielded cable is used, earth (ground) the shield at the field enclosure **only**. Do **not** ground the shield at the transmitter.

HART Communicator Connection Points

The HART Communicator can be connected in the loop as shown in "Wiring" on page 29. It can also be connected directly to the transmitter at the two upper banana plug receptacles.

Test Points

The two lower banana plug receptacles (designated **CAL**) can be used to check transmitter output when configured for 4 to 20 mA. Measurements should be 100-500 mV dc for 0-100% transmitter output.

Remote Communications

The transmitter communicates bidirectionally over the 2-wire field wiring to a HART Communicator. The information that can be continuously displayed is:

- Process Measurement (expressed in one or two types of units)
- Transmitter Temperature (sensor and electronics)
- mA Output (equivalent)

The information that can be remotely displayed and reconfigured includes:

- Output in Percent Flow (square root) or Pressure Units (linear). Percent Display in Linear mode on local display is also supported.
- Zero and Span, including reranging
- Zero Elevation or Suppression

- Linear Output or Square Root Output (in some models)
- Pressure or Flow Units (from list provided)
- Temperature Sensor Failure Strategy
- Electronic Damping
- Poll Address (Multidrop mode)
- External Zero (Enable or Disable)
- Failsafe Direction
- Tag, Description, and Message
- Date of Last Calibration

Communications Format

Communication is based upon the FSK (Frequency Shift Keying) technique. The frequencies are superimposed on the transmitter power/signal leads.

4 to 20 mA Output

The transmitter sends its differential pressure measurement to the loop as a continuous 4 to 20 mA dc signal. It also communicates digitally with the HART Communicator at distances up to 3000 m (10 000 ft). Communication between the remote configurator and the transmitter does not disturb the 4 to 20 mA output signal. Other specifications are:

Data Transmission Rate:	1200 Baud
4 - 20 mA Update Rate:	30 times/second
Output when Fail Low:	3.60 mA
Output when Fail High:	21.00 mA
Output when Underrange	3.80 mA
Output when Overrange	20.50 mA
Output when Offline:	User configurable between 4 and 20 mA

Product Safety Specifications

DANGER

To prevent possible explosions and to maintain flameproof, explosionproof, and dust-ignitionproof protection, observe applicable wiring practices. Plug unused conduit opening with the provided metal pipe plug. Both plug and conduit must engage a minimum of five full threads for 1/2 NPT connections; seven full threads for M20 and PG 13.5 connections.

WARNING

To maintain IEC IP66 and NEMA Type 4X protection, the unused conduit opening must be plugged with the metal plug provided. Use a suitable thread sealant on both conduit connections. In addition, the threaded housing covers must be installed. Turn covers to seat the O-ring into the housing and then continue to hand tighten until the cover contacts the housing metal-to-metal.

NOTE

1. These transmitters have been designed to meet the electrical safety description listed in Table 3. For detailed information or status of testing laboratory approvals/certifications, contact Invensys.
2. Wiring restrictions required to maintain electrical certification of the transmitter are provided in “Wiring” on page 29.

Table 3. Electrical Safety Specifications

Agency Certification, Types of Protection, and Area Classification	Application Conditions	Electrical Safety Design Code
ATEX flameproof: II 2 GD EEx d IIC, Zone 1.	KEMA 00ATEX2019X Temperature Class T6, T85°C, Ta = -40 to +80°C	D
ATEX intrinsically safe: II 1 GD EEx ia IIC, Zone 0.	SIRA 06ATEX2055X Temperature Class T4,Ta = -40 to +80°C	E
ATEX protection n: II 3 GD EEx nL IIC, Zone 2.	SIRA 06ATEX4056X Temperature Class T4, Ta = -40 to +80°C	N
ATEX multiple certifications, ia & ib and n. Refer to Codes E and N for details.	Applies to Codes D, E, and N.[(a)]	M
CSA intrinsically safe for Class I, Division 1, Groups A, B, C, and D; Class II, Division 1, Groups E, F, and G; Class III, Division 1. Also, Zone certified intrinsically safe Ex ia IIC and energy limited Ex nA II.	Connect per MI 020-427. Temperature Class T4A at 40°C (104°F) and T3C at 85°C (185°F) maximum ambient. Temperature Class T4 at 40°C (104°F), and T3 at 85°C (185°F) max. ambient.	C
CSA explosionproof for Class I, Division 1, Groups B, C, and D; dust-ignitionproof for Class II, Division 1, Groups E, F, and G; Class III, Division 1.	Maximum Ambient Temperature 85°C (185°F).	
CSA for Class I, Division 2, Groups A, B, C, and D; Class II, Division 2, Groups F and G; Class III, Division 2.	Temperature Class T4A at 40°C (104°F) and T3C at 85°C (185°F) maximum ambient.	
CSA field device zone certified flameproof Ex d IIC. Also, all certifications of Code C above.	Maximum Ambient Temperature 85°C (185°F).	B

Table 3. Electrical Safety Specifications (Continued)

Agency Certification, Types of Protection, and Area Classification	Application Conditions	Electrical Safety Design Code
FM intrinsically safe for Class I, Division 1, Groups A, B, C, and D; Class II, Division 1, Groups E, F, and G; Class III, Division 1. Also, Zone certified intrinsically safe AEx ia IIC.	Connect per MI 020-427. Temperature Class T4A at 40°C (104°F) and T4 at 85°C (185°F) maximum ambient. Temperature Class T4 at 85°C (185°F) maximum ambient.	F
FM explosionproof for Class I, Division 1, Groups B, C, and D; dust-ignitionproof for Class II, Division 1, Groups E, F, and G; Class III, Division 1.	Temperature Class T6 at 80°C (176°F) and T5 at 85°C (185°F) maximum ambient.	
FM nonincendive for Class I, Division 2, Groups A, B, C, and D; Class II, Division 2, Groups F and G; Class III, Division 2.	Temperature Class T4A at 40°C (104°F) and T4 at 85°C (185°F) maximum ambient.	
FM field device zone certified flameproof AEx d IIC. Also, all certifications of Code F above.	Temperature Class T6 at 75°C (167°F) maximum ambient.	G
IECEx intrinsically safe: Ex ia IIC.	IECEx SIR 06.0010X Temperature Class T4, Ta = -40 to +80°C.	T
IECEx protection n: Ex nL IIC	IECEx SIR 06.0011X Temperature Class T4, Ta = -40 to +80°C.	U
IECEx flameproof: Ex d IIC	IECEx FMG 06.0007X, Ex d IIC T6 Ta=80°C, T5 Ta=85°C Ambient Temperature -20 to +85°C	V

(a) User must permanently mark (check off in rectangular block on data plate) one type of protection only (ia and ib, d, or n). This mark cannot be changed once it is applied.

ATEX and IECEx Warnings

Do not open while circuits are alive.

ATEX Compliance Documents

EN 50014: 1997 (A1 and A2)
EN 50020: 2002
EN 50284: 1999

EN 50281-1-1: 1998
EN 60079-15: 2004

IECEx Compliance Documents

IEC 60079-0 (Edition 3.1): 2000
IEC 60079-0 (Edition 4): 2000
IEC 60079-1 (Edition 5): 2003
IEC 60079-11 (Edition 4): 1999

2. Installation

CAUTION

To avoid damage to the transmitter sensor, do not use any impact devices, such as an impact wrench or stamping device, on the transmitter.

NOTE

1. The transmitter should be mounted so that any moisture condensing or draining into the field wiring compartment can exit through one of the two threaded conduit connections.
2. Use a suitable thread sealant on all connections.

Transmitter Mounting

The IDP Series differential pressure transmitter can be supported by the process piping or mounted to a vertical or horizontal pipe or surface using the optional mounting bracket. See figures below. For dimensional information, refer to DP 020-446.

NOTE

1. If the transmitter is not installed in the vertical position, readjust the zero output to eliminate the position zero effect.
2. When structure codes 78/79 are used (pvdf inserts) with the IDP10 transmitters, the process connection must be made directly to the pvdf inserts in the high and low side process covers.

Process Mounting

With process mounting, the transmitter mounted to and supported by the process piping.

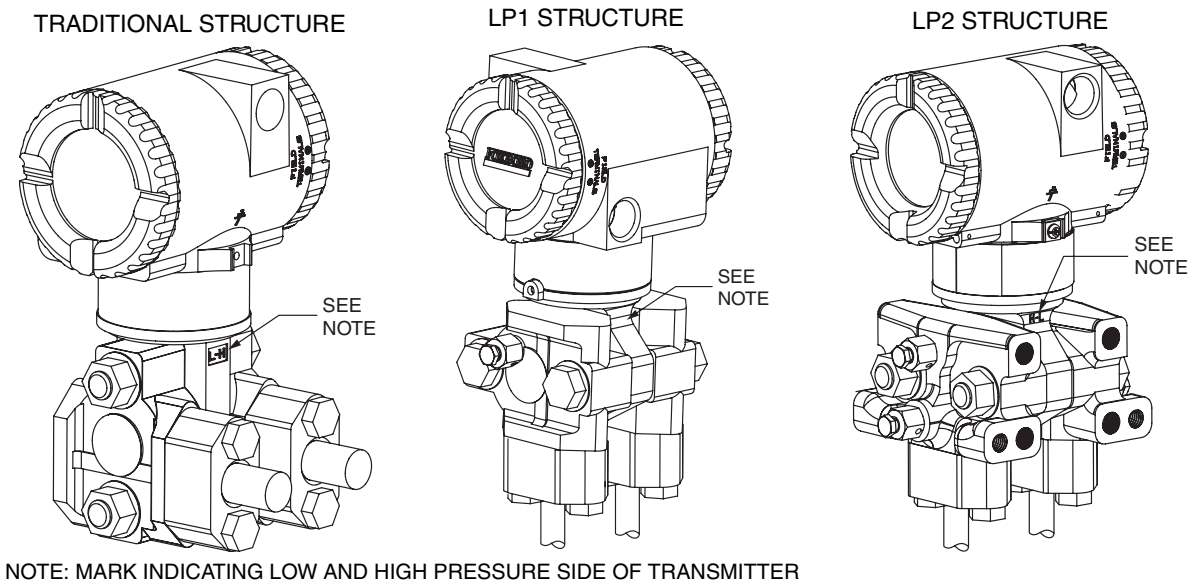

Figure 4. Typical Mounting of an IDP10 Transmitter Supported by Process Piping

Manifold Mounted Transmitter

With manifold mounting, the transmitter is mounted to and supported by a bypass manifold. The bypass manifold can be mounted to a DN50 or 2 inch pipe with an optional mounting bracket. See MI 022-138.

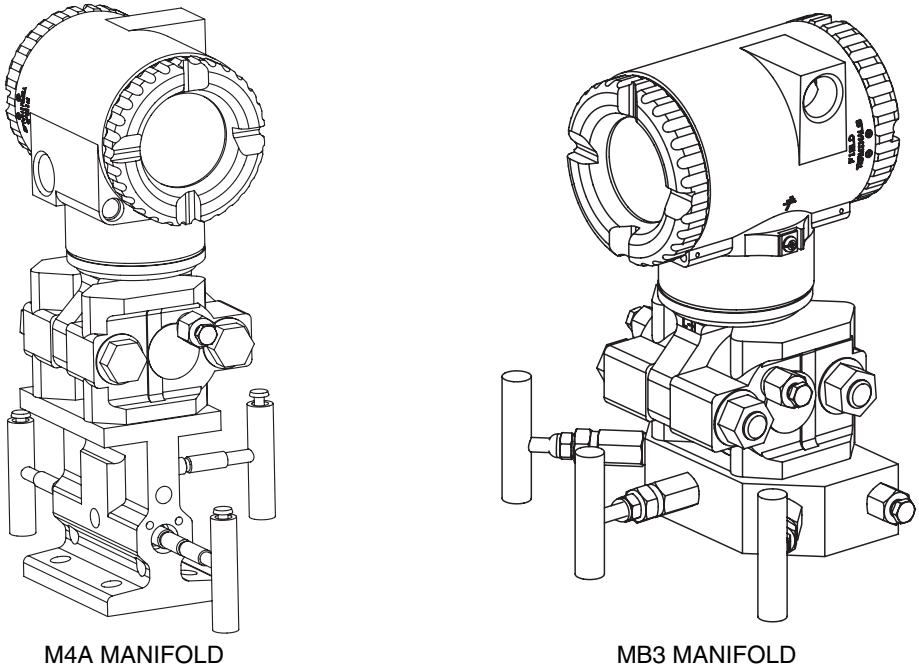

Figure 5. Typical Mounting of an IDP10 Transmitter Supported by a Bypass Manifold

Transmitter Mounted on a Coplanar™ Manifold

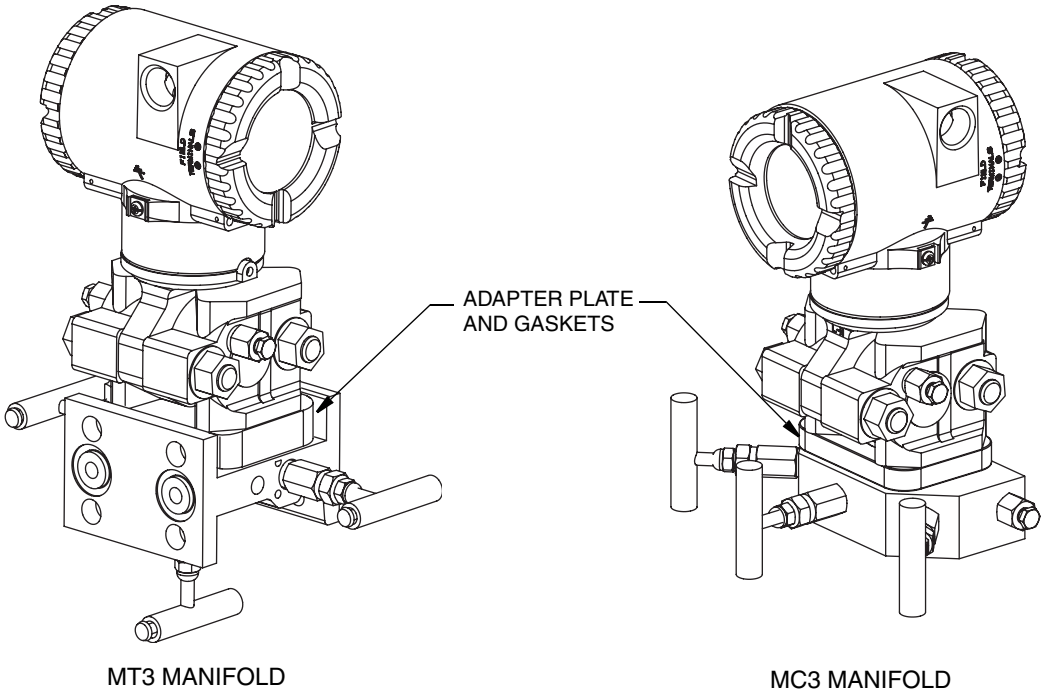

Figure 6. Typical Mounting of IDP10 Transmitter on Coplanar Manifold

Pipe or Surface Mounting

To mount the transmitter to a pipe or surface, use the Standard Mounting Bracket Set (Model Code Option -M1 or M2) or Universal Bracket Mounting Set (Model Code Option -M3).

Standard Mounting Bracket

The transmitter (with either traditional or LP2 low-profile structures) can be mounted to a vertical or horizontal, DN 50 or 2-in pipe using a standard bracket. See Figures 7 and 8 for details of a standard bracket and examples of different mounting situations. Secure the mounting bracket to the transmitter using the four screws provided. Mount the bracket to the pipe. To mount to a horizontal pipe, turn the U-bolt 90° from the position shown. The mounting bracket can also be used for wall mounting by securing the bracket to a wall using the U-bolt mounting holes.

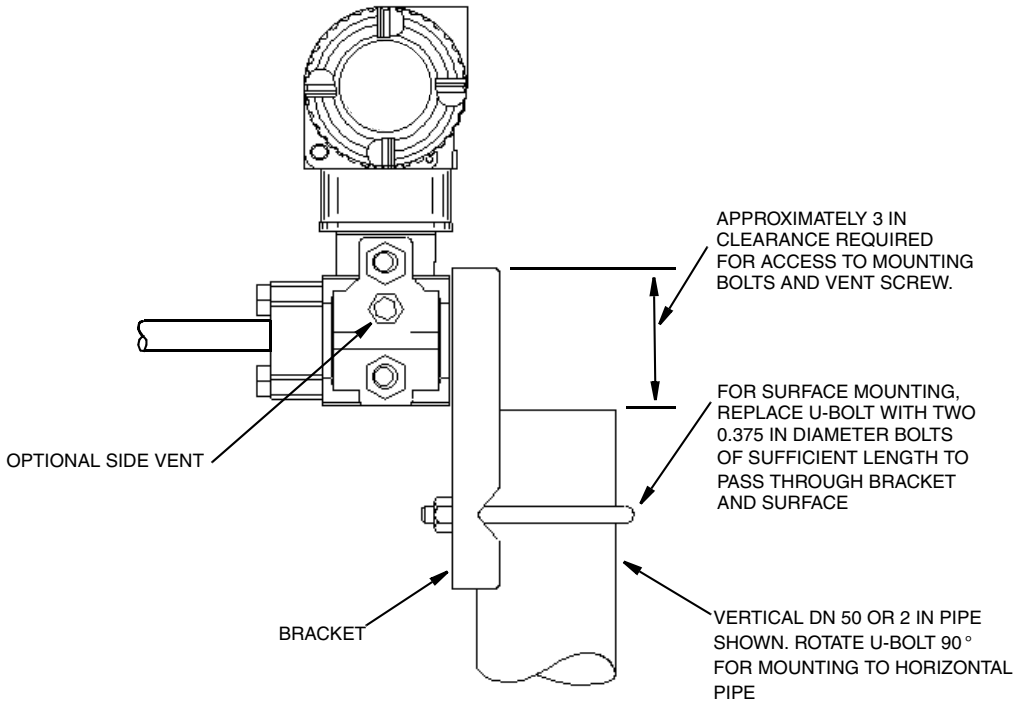

Figure 7. Pipe or Surface Mounted Transmitter Using a Standard Bracket

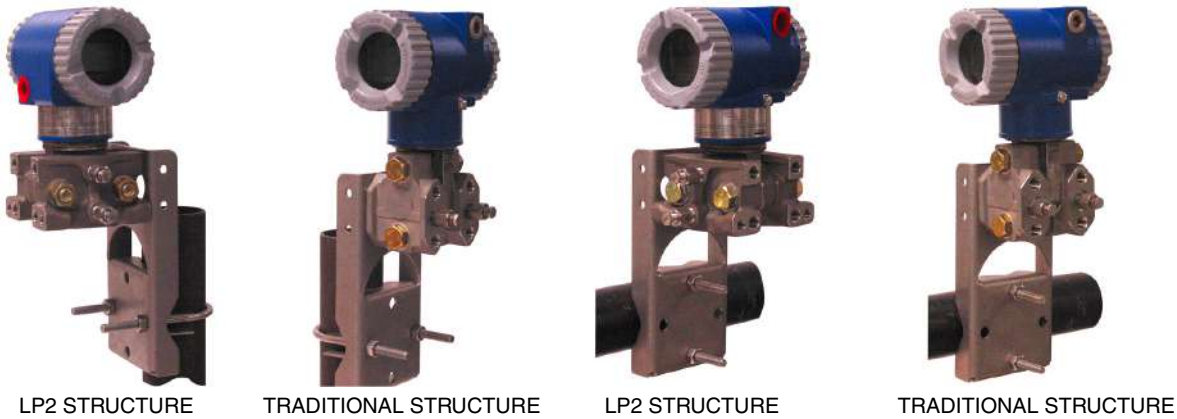

Figure 8. Examples of Mounting With a Standard Bracket

Universal Mounting Bracket

The transmitter (with either traditional or LP2 low-profile structure) can be mounted in a myriad of positions to a vertical or horizontal, DN 50 or 2-in pipe using a universal bracket. See the following figures for details of a universal bracket and examples of different mounting situations. Secure the mounting bracket to the transmitter using the two long or four short screws provided. Mount the bracket to the pipe. The mounting bracket can also be used for wall mounting by securing the bracket to a wall using the U-bolt mounting holes.

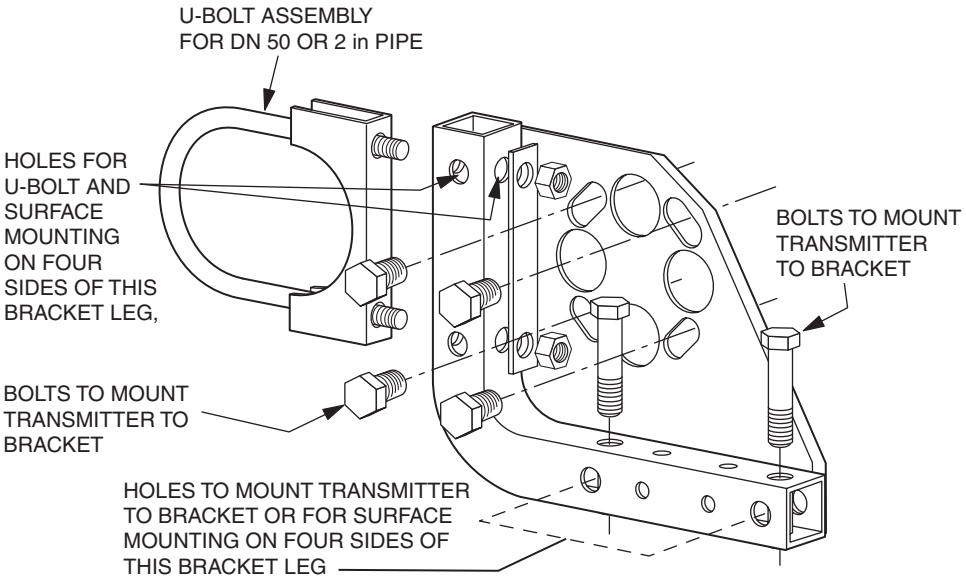

Figure 9. Details of a Universal Bracket

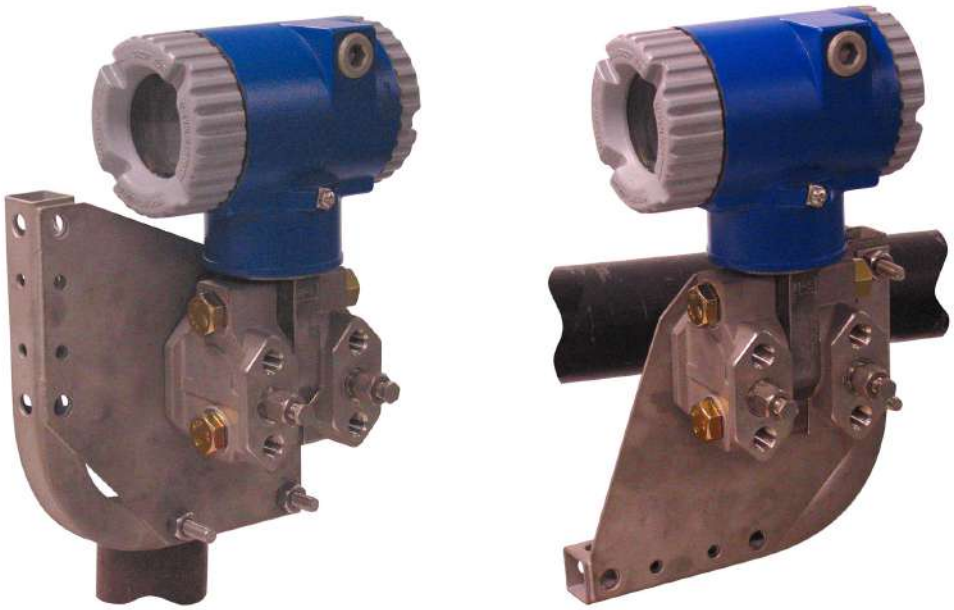

VERTICAL PIPE HORIZONTAL PIPE

Figure 10. Mounting a Transmitter with Traditional Structure Using a Universal Bracket

Figure 11. Vertical Pipe Mounting a Transmitter with LP2 Structure Using a Universal Bracket

Figure 12. Horizontal Mounting a Transmitter with LP2 Structure Using a Universal Bracket

Venting and Draining

Traditional Structure

Sensor cavity venting and draining is provided for both vertical and horizontal mounting. For vertical mounted units, draining is via a drain screw and venting is possible with side vents (Option Code -V). For horizontal mounted units, the unit is self draining and venting is via a vent screw.

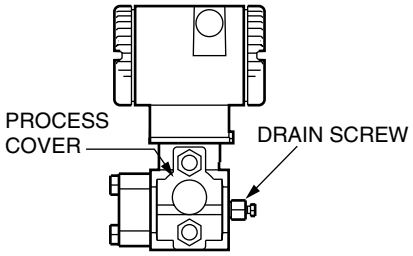

Figure 13. Vertical Mounting - Cavity Draining

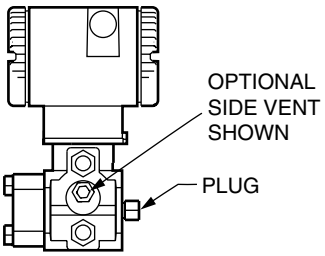

Figure 14. Vertical Mounting - Cavity Venting

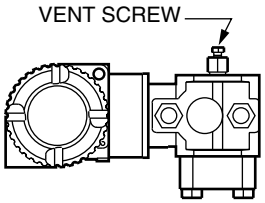

Figure 15. Horizontal Mounting - Cavity Venting

LP1 Low Profile Structure

Sensor cavity venting and draining is provided for both vertical and horizontal mounting. For vertical mounted units, the transmitter is self draining and venting is via a vent screw. For horizontal mounted units, the transmitter can simply be 'turned over' (rotated 180 degrees) to orient the high and low pressure sides in the preferred locations. There is no need to unbolt the

process covers. If the transmitter is connected with a length of impulse piping, such piping should slope up to the transmitter for gas applications and down for liquid applications.

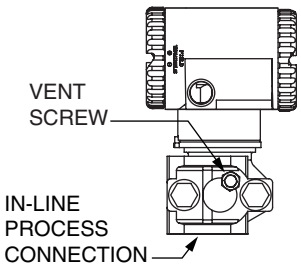

Figure 16. Vertical Mounting - Cavity Venting

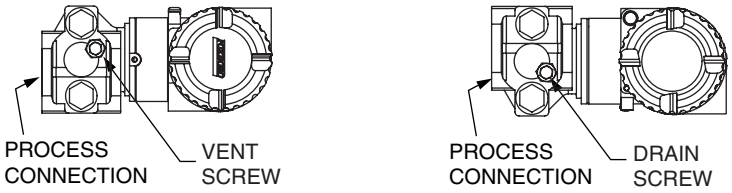

Figure 17. Horizontal Mounting - Cavity Venting and Draining

LP2 Low Profile Structure

The transmitter with LP2 low profile structure had a full-featured vent and drain design with separate vent and drain screws positioned in each cover for complete venting and draining from the sensor cavity.

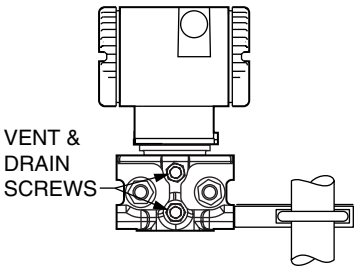

Figure 18. Cavity Venting and Draining

Installation of Flow Measurement Piping

Figures 19 and 20 show typical installations with horizontal and vertical process pipes.

The transmitters are shown below the level of the pressure connections at the pipe (usual arrangement, except for gas flow without a seal liquid), and with filling tees in the lines to the transmitter (for a seal liquid).

If the process fluid being measured must not come in contact with the transmitter, the transmitter lines must be filled with a suitable seal liquid (see procedure in next section). In such a case, the transmitter must be mounted below the level of the pressure connections at the pipe. With steam flow, the lines are filled with water to protect the transmitter from the hot steam. The seal liquid (or water) is added to the lines through the filling tees. To prevent unequal heads on the transmitter, the tees must be at the same elevation and the transmitter must be mounted vertically (as shown). If a seal liquid is not required, elbows can be used in place of the tees.

Tighten drain plugs and optional vent screws to 20 N·m (15 lb·ft). Tighten the four process connector bolts to a torque of 61 N·m (45 lb·ft).

Note that the low and high pressure sides of the transmitter are identified by an L-H marking on the side of the sensor above the warning label.

With medium viscosity seal liquids and/or long transmitter lines, larger valve sizes should be used.

NOTE

1. With a **horizontal** line, pressure connections at the pipe should be at the side of the line. However, with gas flow without a seal liquid, connections should be at top of line.
2. With a **vertical** line, flow should be upwards.
3. For **liquid** or **steam** flow, the transmitter should be mounted **lower** than the pressure connections at the pipe.
4. For **gas** flow **without** a seal liquid, the transmitter should be mounted **above** the pressure connections at the pipe; for **gas** flow **with** a seal liquid, the transmitter should be mounted **below** the pressure connections.
5. Invensys recommends the use of snubbers in installations prone to high levels of fluid pulsations.

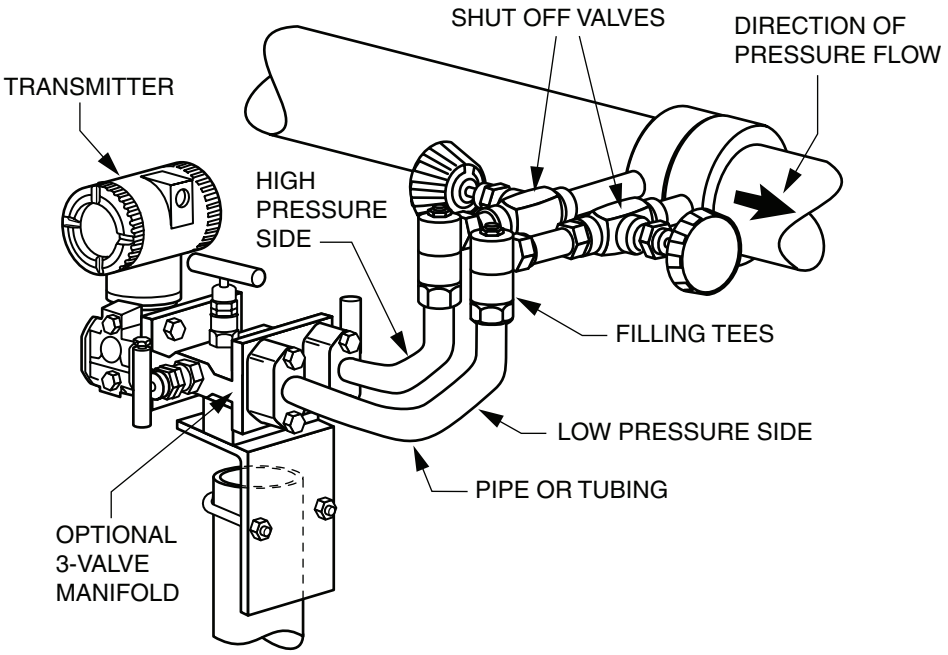

Figure 19. Example of Horizontal Process Line Installation

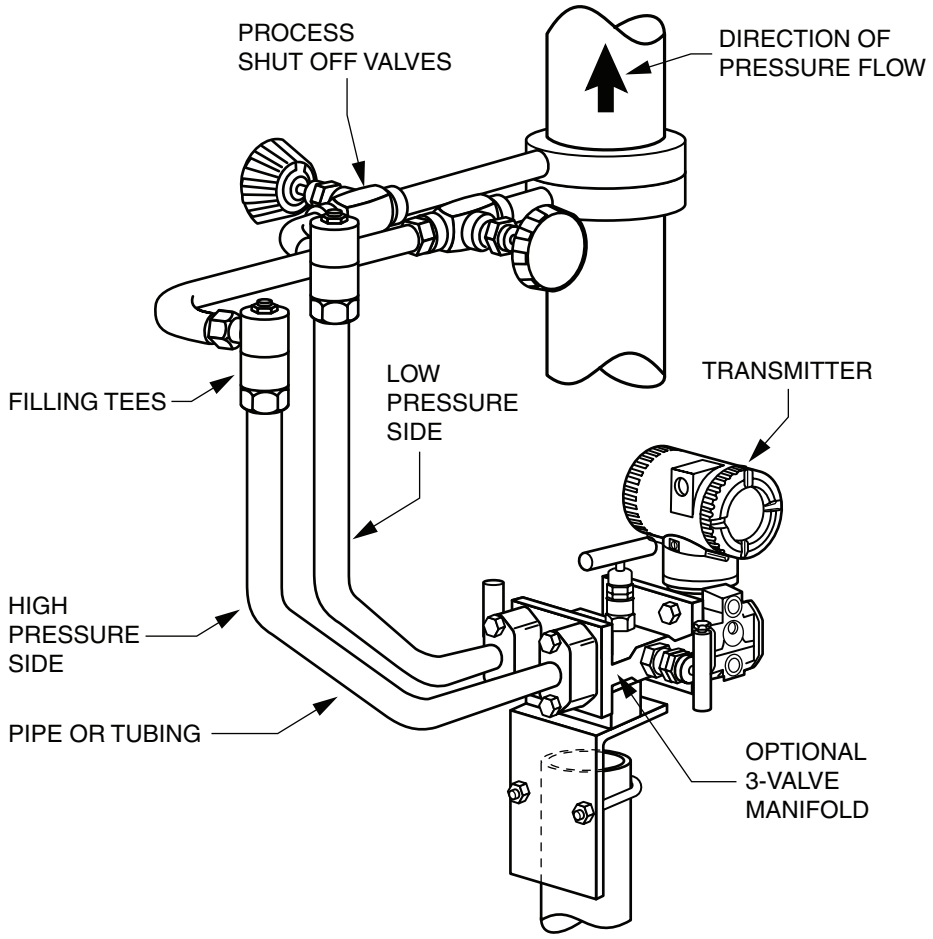

Figure 20. Example of Vertical Process Line Installation

Filling System with Seal Liquid

If the process fluid being measured must not come in contact with the transmitter, the transmitter lines must be filled with a suitable seal liquid. The procedure to do this is as follows:

1. If the transmitter is in service, follow the procedure for "Taking a Differential Pressure Transmitter Out of Operation" on page 35.
2. Close both process shutoff valves.
3. Open all three valves on the 3-valve manifold.
4. Partially open the vent screws on the transmitter until all air has been forced out of the transmitter body and lines. Close the vent screws.
5. Refill the tee connections. Replace the plugs and close the bypass valve. Check for leaks.
6. Follow the procedure for "Putting a Differential Pressure Transmitter Into Operation" on page 35.

CAUTION

To prevent loss of seal liquid and contamination of process fluid, never open both process shutoff valves and manifold shutoff valves if the bypass valve is open.

Positioning the Housing

The transmitter housing (topworks) can be rotated up to one full turn in the counterclockwise direction when viewed from above for optimum access to adjustments, display, or conduit connections. Housings have either an anti-rotation screw or a retention clip that prevent the housing from being rotated beyond a safe depth of housing/sensor thread engagement.

WARNING

If the electronics housing is removed for maintenance, it must be hand tightened to the bottom of the threads, but not over-tightened upon reassembly. See "Removing and Reinstalling a Housing Assembly" on page 69.

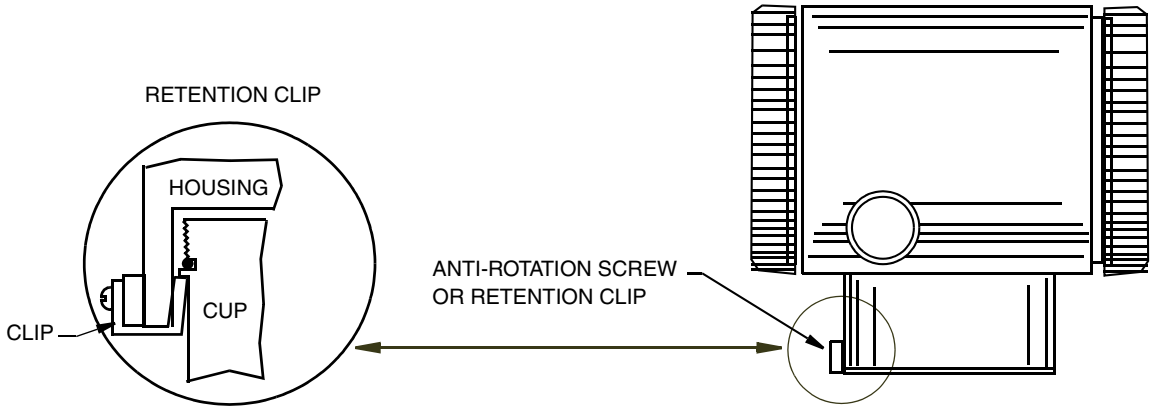

Figure 21. Housing Screw or Clip Location

Positioning the Display

The display (optional in some models) can be rotated within the housing to any of four positions at 90° increments. To do this, grasp the two tabs on the display and rotate it about 10° in a counterclockwise direction. Pull out the display. Ensure that the O-ring is fully seated in its groove in the display housing. Turn the display to the desired position, reinsert it in the electronics module, aligning the tabs on the sides of the assembly, and twist it in the clockwise direction.

CAUTION

Do **not** turn the display more than 180° in any direction. Doing so could damage its connecting cable.

Setting the Write Protect Jumper

Your transmitter has write protection capability. This means that the external zero, local display, and remote communications can be prevented from writing to the electronics. Write protection is set by moving a jumper that is located in the electronics compartment behind the optional display. To activate write protection, remove the display as described in the previous section, then remove the jumper or move it to the lower position as shown on the exposed label. Replace the display.

Cover Locks

Electronic housing cover locks, shown in Figure 22, are provided as standard with certain agency certifications and as part of the Custody Transfer Lock and Seal option. To lock the covers, unscrew the locking pin until approximately 6 mm (0.25 in) shows, lining up the hole in the pin with the hole in the housing. Insert the seal wire through the two holes, slide the seal onto the wire ends and crimp the seal

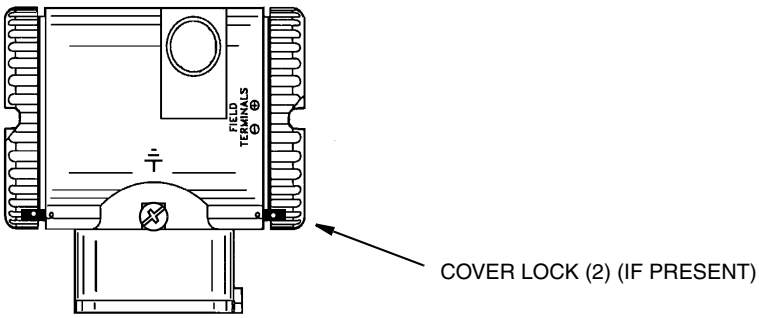

Figure 22. Cover Lock Location

Wiring

The installation and wiring of your transmitter must conform to local code requirements.

WARNING

ATEX requires that when the equipment is intended to be used in an explosive atmosphere caused by the presence of combustible dust, cable entry devices and blanking elements shall provide a degree of ingress protection of at least IP6X. They shall be suitable for the conditions of use and correctly installed.

NOTE

Invensys recommends the use of transient/surge protection in installations prone to high levels of electrical transients and surges.

Accessing Transmitter Field Terminals

For access to the field terminals, thread the cover lock (if present) into the housing to clear the threaded cover and remove the cover from the field terminals compartment as shown in Figure 23. Note that the embossed letters **FIELD TERMINALS** identify the proper compartment.

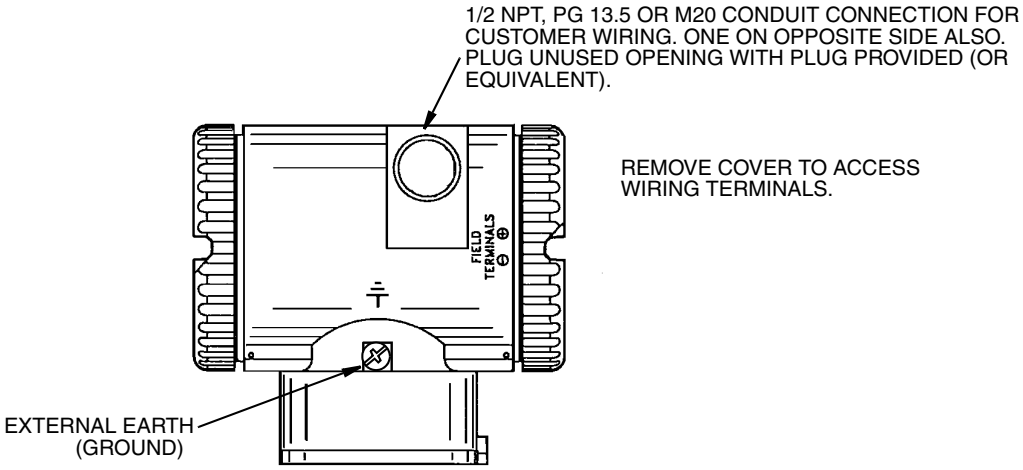

Figure 23. Accessing Field Terminals

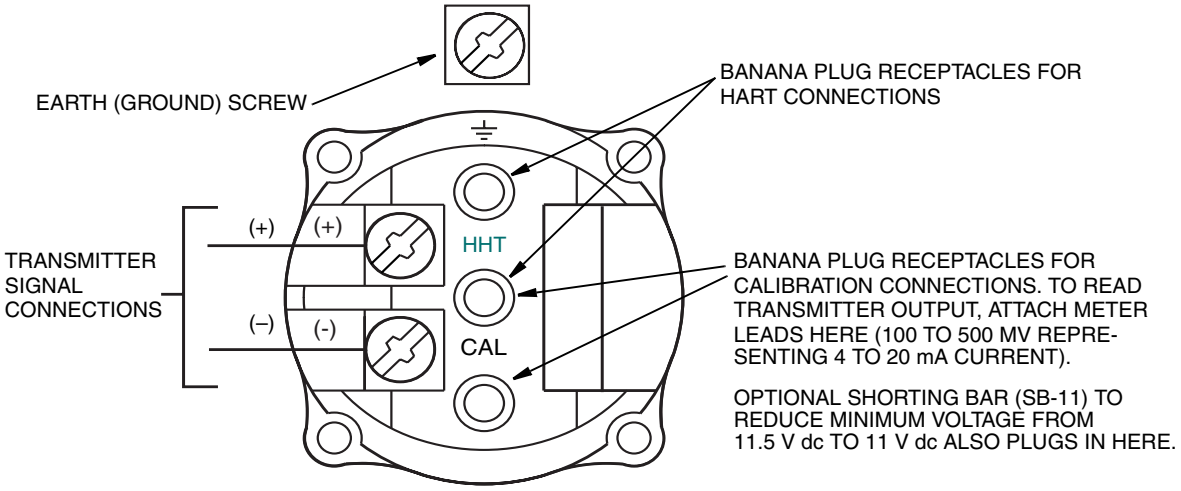

Figure 24. Identification of Field Terminals

Wiring the Transmitter to a Control Loop

When wiring the transmitter, the supply voltage and loop load must be within specified limits. The supply output load vs. voltage relationship is:

R_{MAX} = 47.5 (V - 11.5) and is shown in Figure 25.

— NOTE

The relationship when the optional shorting bar is used is:

R_{MAX} = 46.8 (V - 11).

Any combination of supply voltage and loop load resistance in the shaded area can be used. To determine the loop load resistance (transmitter output load), add the series resistance of each component in the loop, excluding the transmitter. The power supply must be capable of supplying 22 mA of loop current.

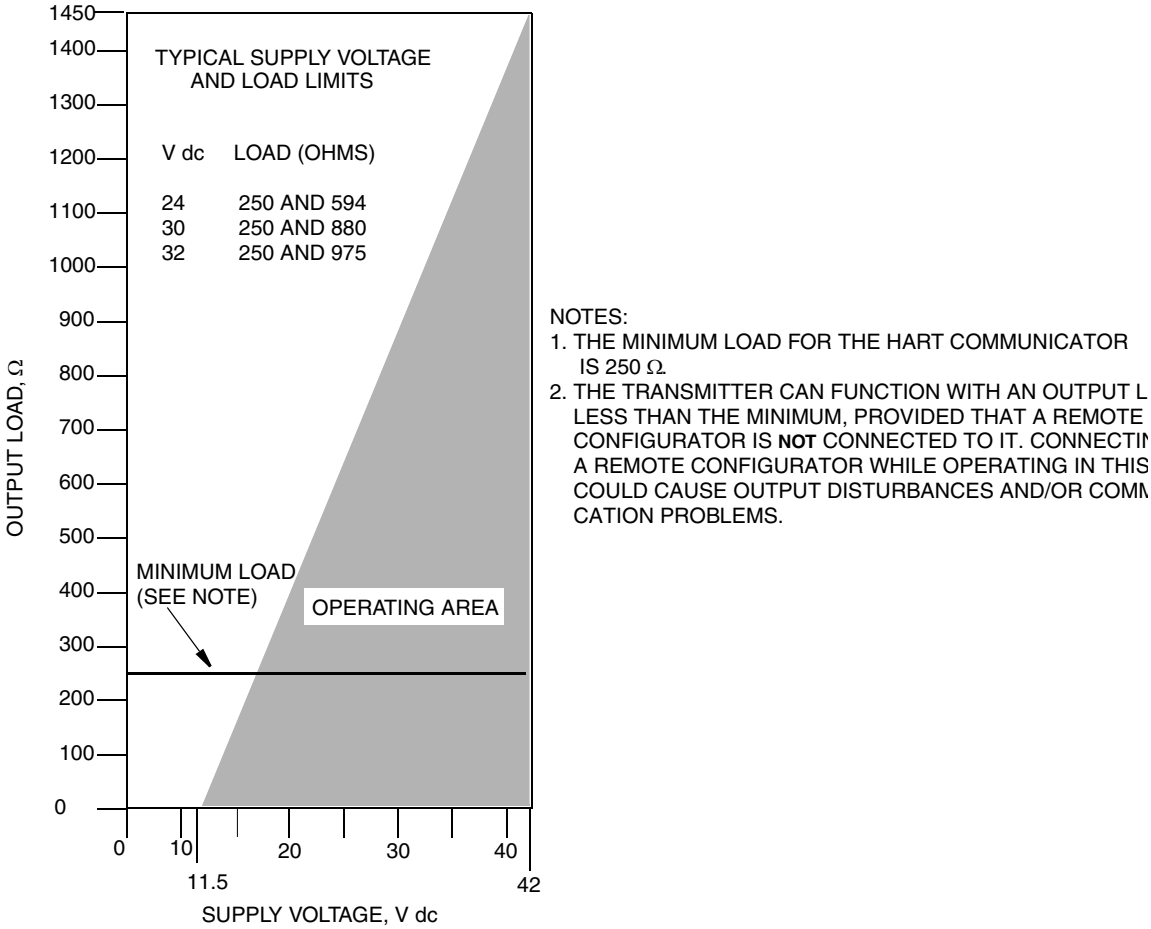

Figure 25. Supply Voltage and Loop Load

Examples:

1. For a loop load resistance of 880 Ω, the supply voltage can be any value from 30 to 42 V dc.
2. For a supply voltage of 24 V dc, the loop load resistance can be any value from 250 to 594 Ω (zero to 594 Ω without a HART Communicator connected to the transmitter).

To wire one or more transmitters to a power supply, proceed with the following steps.

1. Remove the cover from the transmitter field terminals compartment.
2. Run signal wires (0.50 mm^2 or 20 AWG, typical) through one of the transmitter conduit connections. Use twisted single pair to protect the 4 to 20 mA output and/or remote communications from electrical noise. Maximum recommended length for signal wires is:

- 3050 m (10,000 ft) **using single pair cable** and adhering to requirements of HART physical layer implementation defined in HART Document HCF_SPEC-53. Use CN=1 when calculating max. lengths.
- 1525 m (5000 ft) in a multidrop (15 devices maximum) mode. Screened (shielded) cable could be required in some locations.

NOTE

Do not run transmitter wires in same conduit as mains (ac power) wires.

3. If shielded cable is used, earth (ground) the shield at the power supply **only**. Do not ground the shield at the transmitter.
4. Plug unused conduit connection with the 1/2 NPT, PG 13.5 or M20 metal plug provided (or equivalent). To maintain specified explosionproof and dust-ignitionproof protection, plug must engage a **minimum** of five full threads for 1/2 NPT connections; seven full threads for M20 and PG 13.5 connections.
5. Connect an earth (ground) wire to the earth terminal in accordance with local practice.

! CAUTION

If the signal circuit must be earthed (grounded), it is preferable to do so at the negative terminal of the dc power supply. To avoid errors resulting from earth loops or the possibility of short-circuiting groups of instruments in a loop, there should be only one earth in a loop.

6. Connect the power supply and receiver loop wires to the “+” and “–” terminal connections.
7. Connect receivers (such as controllers, recorders, indicators) in series with power supply and transmitter as shown in Figure 26.
8. Reinstall the cover onto the housing by rotating it clockwise to seat the O-ring into the housing and then continue to hand tighten until the cover contacts the housing metal-to-metal. If cover locks are present, lock the cover per the procedure described in “Cover Locks” on page 29.
9. If wiring additional transmitters to the same power supply, repeat Steps 1 through 8 for each additional transmitter. The setup with multiple transmitters connected to a single power supply is shown in Figure 27.
10. A HART Communicator or PC-Based Configurator can be connected in the loop between the transmitter and the power supply as shown in Figures 26 and 27. Note that a minimum of 250 Ω must separate the power supply from the HART Communicator or PC-Based Configurator.

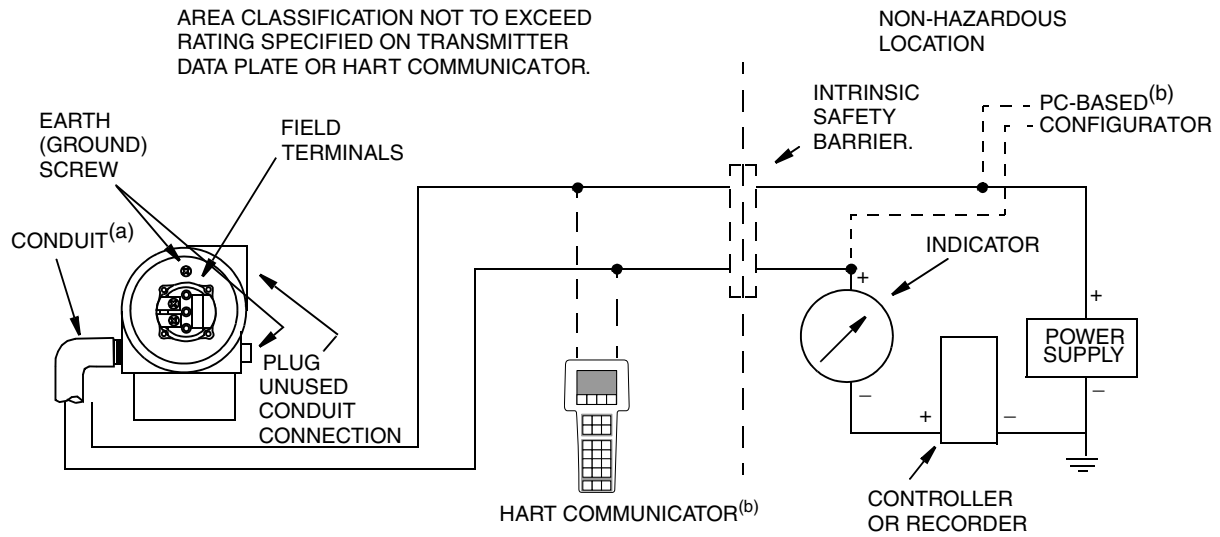

(a) RUN CONDUIT DOWN TO AVOID MOISTURE BUILDUP IN TERMINALS COMPARTMENT.
(b) THERE MUST BE AT LEAST 250 Ω TOTAL RESISTANCE BETWEEN THE HART COMMUNICATOR OR PC-BASED CONFIGURATOR AND THE POWER SUPPLY.

Figure 26. Loop Wiring Transmitters

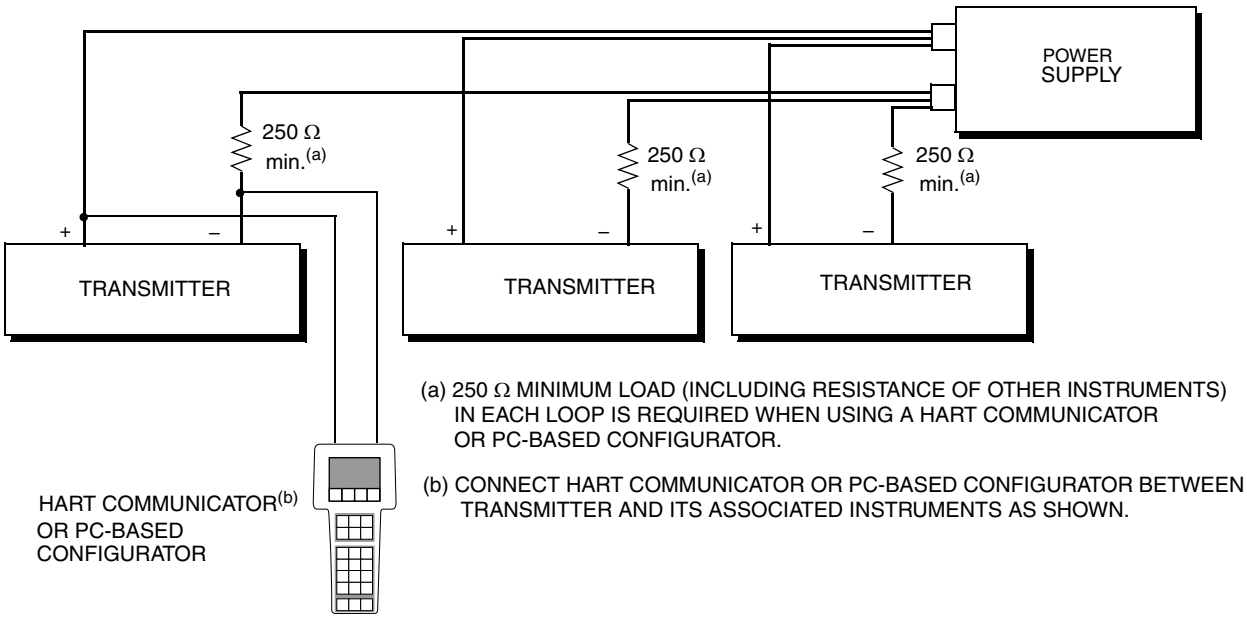

(a) 250 Ω MINIMUM LOAD (INCLUDING RESISTANCE OF OTHER INSTRUMENTS) IN EACH LOOP IS REQUIRED WHEN USING A HART COMMUNICATOR OR PC-BASED CONFIGURATOR.

(b) CONNECT HART COMMUNICATOR OR PC-BASED CONFIGURATOR BETWEEN TRANSMITTER AND ITS ASSOCIATED INSTRUMENTS AS SHOWN.

Figure 27. Wiring Several Transmitters to a Common Power Supply

Multidrop Communication

"Multidropping" refers to the connection of several transmitters to a single communications transmission line. Communications between the host computer and the transmitters takes place digitally with the analog output of the transmitter deactivated. With the HART communications

protocol, up to 15 transmitters can be connected on a single twisted pair of wires or over leased telephone lines.

The application of a multidrop installation requires consideration of the update rate necessary from each transmitter, the combination of transmitter models, and the length of the transmission line. Multidrop installations are not recommended where Intrinsic Safety is a requirement. Communication with the transmitters can be accomplished with any HART compatible modem and a host implementing the HART protocol. Each transmitter is identified by a unique address (1-15) and responds to the commands defined in the HART protocol.

Figure 28 shows a typical multidrop network. Do not use this figure as an installation diagram. Contact the HART Communications Foundation, (512) 794-0369, with specific requirements for multidrop applications.

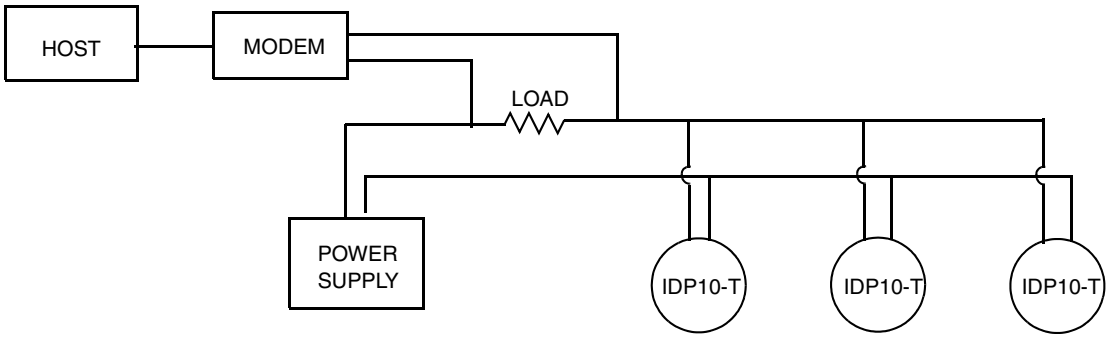

Figure 28. Typical Multidrop Network

The HART Communicator can operate, configure, and calibrate IASPT transmitters with HART communication protocol in the same way as it can in a standard point-to-point installation.

NOTE

IASPT transmitters with HART communication protocol are set to poll address 0 (**POLLADR 0**) at the factory, allowing them to operate in the standard point-to-point manner with a 4 to 20 mA output signal. To activate multidrop communication, the transmitter address must be changed to a number from 1 to 15. Each transmitter must be assigned a unique number on each multidrop network. This change deactivates the 4 to 20 mA analog output.

Connecting the Transmitter to an I/A Series System

The transmitter can also send its measurement to an I/A Series system as a digital signal via an FBM214/215. Wiring terminations at the transmitter are the same as described above. For other system wiring details, refer to the installation instructions provided with the I/A Series system.

Putting a Differential Pressure Transmitter Into Operation

The following procedure explains how to sequence the valves in your flow measurement piping or optional bypass manifold to ensure that your transmitter is not overranged and that seal liquid is not lost. Refer to Figures 19 and 20.

NOTE

This procedure assumes that the process shutoff valves are open.

1. Make sure that both upstream and downstream manifold valves are closed.
2. Make sure that the bypass valve is open.
3. Slowly open the upstream manifold valve.
4. Close the bypass valve.
5. Slowly open the downstream manifold valve.

Taking a Differential Pressure Transmitter Out of Operation

The following procedure explains how to sequence the valves in your flow measurement piping or optional bypass manifold to ensure that your transmitter is not overranged and that seal liquid is not lost. Refer to the Figures 19 and 20.

NOTE

This procedure assumes that the process shutoff valves are open.

1. Close the downstream manifold valve.
2. Close the upstream manifold valve.
3. Open the bypass valve.
4. Carefully open the vent screw to release any residual pressure before disconnecting lines.

WARNING

When venting pressure from the transmitter, wear suitable protective equipment to prevent possible injury from process material, temperature, or pressure.

3. Operation Via Local Display

A local display, as shown in Figure 29, has two lines of information. The upper line is a 5-digit numeric display (4-digit when a minus sign is needed); the lower line is a 7-digit alphanumeric display. The display provides local indication of measurement information.

The display can be configured to meet your specific needs. If configured **Show 1**, M1 is displayed. If configured **Show 2**, M2 is displayed. To temporarily view the alternate measurement, press the **Enter** button. After showing this measurement for a brief period, the display reverts to the configured display. If configured **Toggle**, the display toggles between M1 and M2. When M2 is displayed, an M2 message blinks in the lower right of the display.

The display also provides a means for reranging, calibration, and configuration, viewing the database, testing the display, and reranging the transmitter via the 2-button keypad. You can access these operations by means of a multi-level menu system. Entry to the Mode Select menu is made (from normal operating mode) by pressing the **Next** button. You can exit this menu, restore your prior calibration or configuration, and return to the normal operating mode at any time by going to **Cancel** and pressing the **Enter** button.

The top level structure diagram is shown in Figure 30.

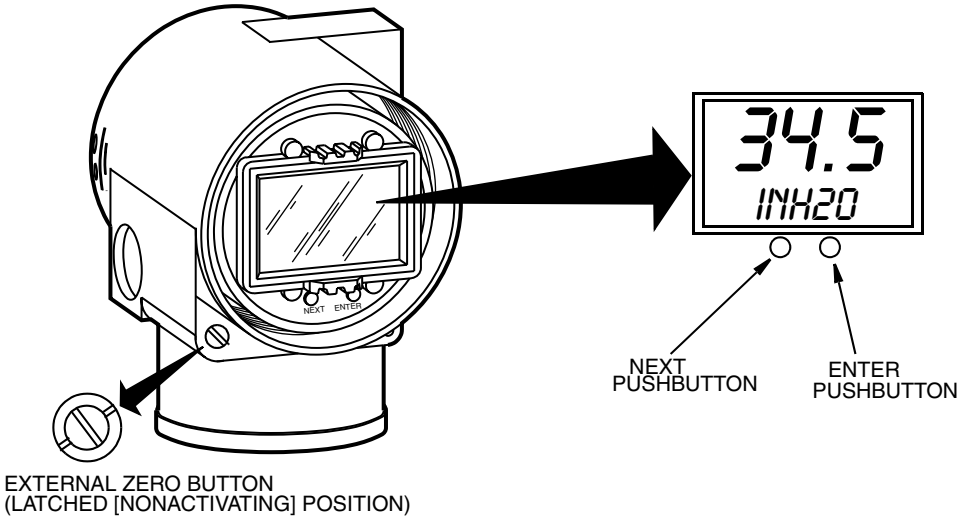

Figure 29. Local Display Module

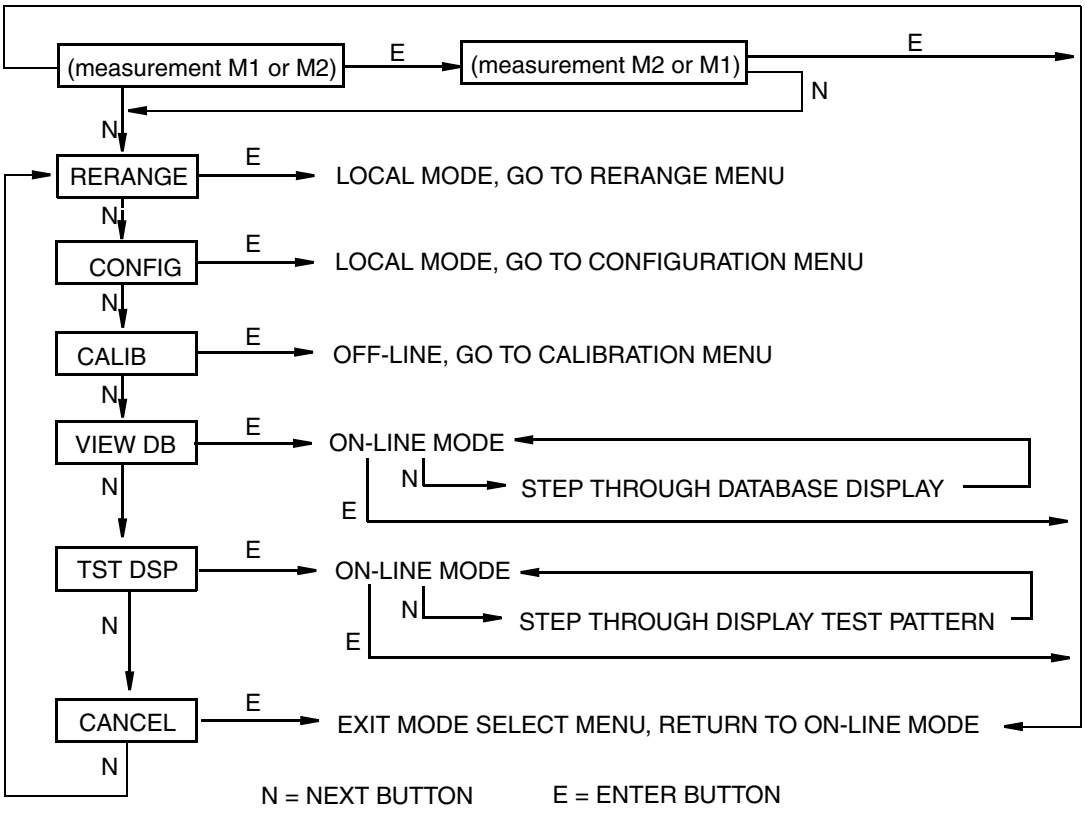

Figure 30. Top Level Structure Diagram

Entering Numerical Values

The general procedure for entering numerical values in Calibration and Configuration is as follows:

1. At the appropriate prompt, press the **Enter** button. The display shows the last (or default) value with the first digit flashing.
2. Use the **Next** button to select the desired first digit, then press the **Enter** button. Your selection is entered and the second digit flashes.
3. Repeat Step 2 until you have created your new value. If the number has less than five characters, use leading or trailing zeros for the remaining spaces. When you have configured the fifth space, the display prompts you to place the decimal point.
4. Move the decimal point with the **Next** button until it is where you want it and press the **Enter** button.

— NOTE

1. The decimal point may not be placed directly after the first digit. For example, you can not enter a value as 1.2300; you must enter it as 01.230.
2. The decimal position is identified by flashing except at the position after the fifth digit. At that position (representing a whole number), the decimal point is assumed.

5. The display advances to the next menu item.

Reranging

You can access the Rerange mode in the top level menu (see Figure 30). Entry to the Mode Select menu is made (from normal operating mode) by pressing the **Next** button. The display reads **RERANGE**. You can then adjust **M1 URV** and/or **M1 LRV** in the following two submenus.

— NOTE

If **M1 MODE** is in a square root mode, regardless of engineering units selected, **RERANGE** is automatically done in the following "default" pressure units:

- **inH2O**, if **M2 MODE** is a type of square root.
- **M2 EGU** units, if **M2 MODE** is linear.

The bottom line of the display indicates the "default units" during **RERANGE**. Following **RERANGE**, the display automatically switches back to the configured engineering units.

M1 URV:

To edit the upper range value, press **Enter** at the prompt **M1 URV**. Use the procedure "Entering Numerical Values" on page 38 section to edit this parameter.

M1 LRV:

Similar to **M1URV** immediately above.

— NOTE

M1 LRV is bypassed if **M1 MODE** is configured as square root since **M1 LRV** must be zero.

Viewing the Database

You can access the View Database mode by the multi-level menu system described above. Entry to the Mode Select menu is made (from normal operating mode) by pressing the **Next** button. The display reads **RERANGE**. Use the **Next** button to get to **VIEW DB**. Acknowledge your choice of this selection by pressing the **Enter** button. The display shows the first item in the database. You can step through the database display by repeated use of the **Next** button. You can abort this procedure at any time by pressing the **Enter** button.

Viewing the Pressure Range

The values of M1LRV and M1 URV can be viewed in VIEW DB as described above.

Testing the Display

You can access the Test Display mode by the same multi-level menu system that was used to enter Reranging, Calibration, Configuration, and View Database mode. Entry to the Mode Select menu is made (from normal operating mode) by pressing the **Next** button. The display reads **RERANGE**. Use the **Next** button to get to **TST DSP**. Acknowledge your choice of this selection by pressing the **Enter** button. The display shows the first test segment pattern. You can step through the five patterns by repeated use of the **Next** button. You can abort the test at any time by pressing the **Enter** button. The five patterns are shown in Figure 31.

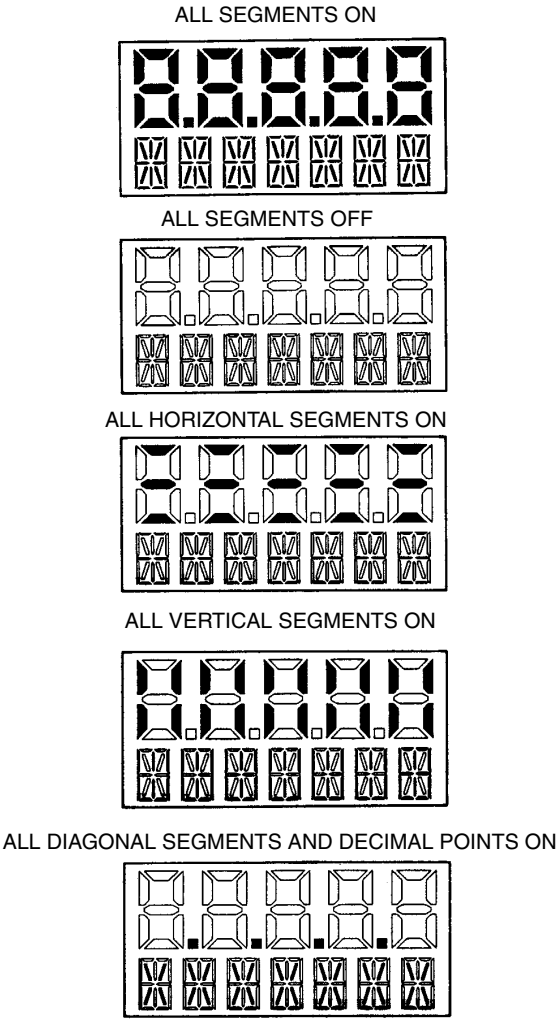

Figure 31. Display Test Segment Patterns

Error Messages

Table 4. Operation Error Messages

Parameter	Condition Tested	Error Message	Action
Normal Operation	Write Protection Enabled	WR PROT	Displays periodically to notify user that unit is in Write Protect.
	Any non-On-line Condition	OFFLINE	Notifies user of a non-On-line condition.
Startup	Database OK or corrupted	INITERR	User should perform SET GDB procedure. See “SET GDB:” on page 63.

4. Calibration

NOTE

1. For best results in applications where high accuracy is required, rezero the transmitter output once it has stabilized at the final operating temperature.
2. Zero shifts resulting from position effects and/or static pressure effects can be eliminated by rezeroing the transmitter output.
3. When checking the zero reading of a transmitter operating in the square root mode, return the output to the linear mode. This eliminates an apparent instability in the output signal. Return the transmitter output to the square root mode after the zero check is complete.
4. After calibrating transmitters operating with a 4 to 20 mA (or 1 to 5 V dc) output signal, check the underrange and overrange output values to ensure that they extend beyond 4 and 20 mA (or 1 and 5 V dc) respectively.

General Calibration Notes

1. Each transmitter is factory characterized over its full rated pressure range. One benefit of this process is that every transmitter can measure any applied differential pressure within its range limits regardless of the calibrated range. The applied differential pressure is measured and converted into an internal digital value of differential pressure. This digital value of differential pressure is always available whether the transmitter is calibrated or not. Calibration assures that the transmitter rated accuracy is achieved over the calibrated range.

2. The internal digital value of differential pressure can be displayed on the optional local display, transmitted digitally, and converted to a 4 to 20 mA analog output signal.

3. Each transmitter is factory calibrated to either a specified or a default calibrated range. This calibration optimizes the accuracy of the internal digital value of differential pressure over that range. If no range is specified, the default range is zero to the sensor upper range limit (URL).

4. The transmitter database has configurable values for both Lower Range Value (LRV) and upper range value (URV). These values are used for two functions.

a. Defining the Calibrated Range When Using Local Pushbuttons for Calibration:

- When either **CAL LRV** or **CAL URV** is initiated from the local pushbuttons, the transmitter expects that the differential pressure applied at the time the button is pressed is equal to the LRV or URV value respectively.
- This function trims the internal digital value of differential pressure; that is, it performs a calibration based on the application of accurate differential pressures equal to the values entered for LRV and URV in the transmitter database.
- This function also sets the 4 and 20 mA output points; that is, the 4 and 20 mA points correspond to the values of LRV and URV in the database.

- The value of LRV can be larger than the value of URV.

b. Reranging Without the Application of Pressure:

- Since the transmitter continually determines an internal digital value of the measured differential pressure from the lower range limit (LRL) to the upper range limit (URL), the 4 and 20 mA output points can be assigned to any differential pressure values (within the span and range limits) without application of pressure.
- The reranging function is accomplished by entering new database values for LRV and URV.
- Reranging does not affect the calibration of the transmitter; that is, it does not affect the optimization of the internal digital value of differential pressure over a specific calibrated range.
- If the reranged LRV and URV are not within the calibrated range, the measured values may not be as accurate as when they are within the calibrated range.

If the transmitter is in square root mode for flow rate measurement, the URV in the database is displayed as the flow rate URV when the view database (**VIEW DB**) function is used. However, the LRV and URV in pressure units can be displayed by selecting the reranging (**RERANGE**) function. LRV is always zero when the transmitter is configured for square root mode.

5. When the optional local display is used, the internal digital value of differential pressure is sent directly to the indicator.
   - The display can show any measured differential pressure in selected units regardless of the calibrated range and the values of LRV and URV (within the limits of the transmitter and display).
   - If the measured differential pressure is outside the range established by the LRV and URV values in the database, the display shows the measurement but also continually blinks to indicate that the measurement is out of range. The mA current signal is saturated at either the low or high overrange limit respectively but the display continually shows the pressure.
6. When configured for 4 to 20 mA output, the internal digital value of differential pressure is converted to an analog current signal.
   - The transmitter sets the output at 4 mA for the LRV and 20 mA for the URV.
   - There is an independent trim on the digital-to-analog conversion stage. This trim allows for slight adjustment of the 4 and 20 mA outputs. This compensates for any slight difference that exists between the transmitter mA output and an external reference device which is measuring the current.
   - The mA trim does not affect the calibration or the reranging of the transmitter and does not affect the internal digital value of differential pressure or the transmission or display of measured pressure.
   - The mA trim can be done with or without pressure applied to the transmitter.
7. Zeroing from the local display does not affect the span.

When the transmitter is zeroed to compensate for installed position effect, the transmitter can have either LRV differential pressure applied (**CAL LRV**) or zero differential pressure applied (**CAL AT0**). If using a zero-based range, either method produces the same result. However, if the range is not zero-based, it is advantageous to have both methods available.

For example, consider a differential pressure transmitter having a range of 50 to 100 psig. If it is not feasible to vent the transmitter to atmosphere for zeroing (or to bypass the high and low sides for zeroing), it can be zeroed while the LRV differential pressure of 50 psi is applied by using the **CAL LRV** function. On the other hand, if the transmitter has been installed but there is no pressure in the process line yet (or the high and low sides can be connected by a bypass valve), it can be zeroed while open to atmosphere (or bypassed) by using the **CAL AT0** function.

a. Zeroing with LRV Pressure Applied (**CAL LRV**):

- Before using this zeroing function, apply a differential pressure to the transmitter equal to the value of LRV stored in the transmitter database.
- When you zero the transmitter, the internal digital value of differential pressure is trimmed to be equal to the value of LRV stored in the database and the mA output set to 4 mA.
- If zeroing is done when the applied differential pressure is different from the LRV value in the database, the internal digital value of differential pressure is biased by the difference in the values but the output is still set at 4 mA.
- The **CAL LRV** and **CAL URV** function should be used when calibrating a transmitter for a specific range with known input differential pressures applied for the LRV and URV.

b. Zeroing with Zero Pressure Applied (**CAL AT0**):

- Make sure that the applied differential pressure is at zero. This means venting the transmitter to atmosphere or opening a bypass valve to connect high and low sides.

- When you zero the transmitter, the internal digital value of the differential pressure is trimmed to be equal to zero and the mA output set to an appropriate value such that the mA output is a nominal 4 mA when the LRV pressure is applied later.

Calibration Setup

The following sections show setups for field or bench calibration. Use test equipment that is at least three times as accurate as the desired accuracy of the transmitter.

— NOTE

It is not necessary to set up calibration equipment to rerange the transmitter to a different range. The transmitter can be accurately reranged by simply changing the lower range value and the upper range value, which are stored in the transmitter database.

Setup of Electronic Equipment

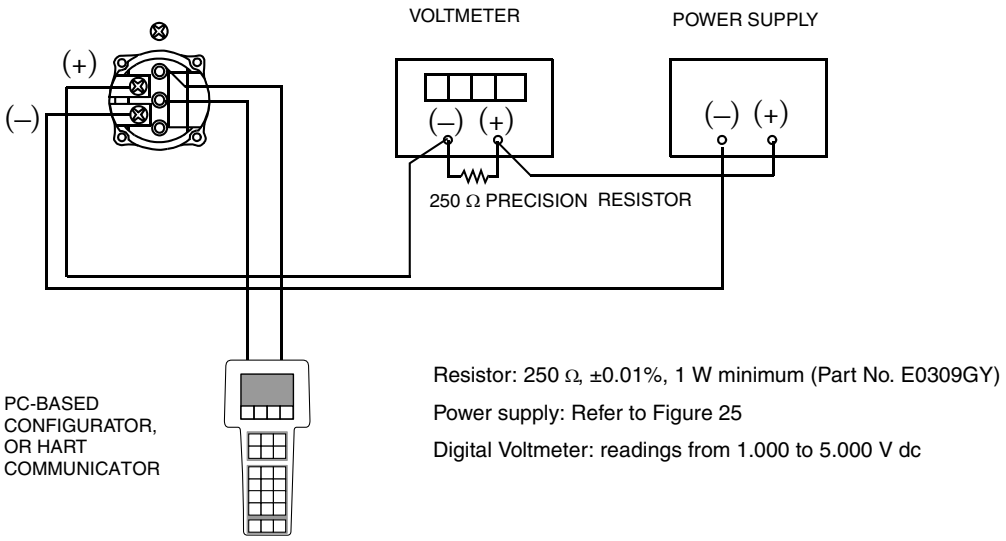

Figure 32. 4 to 20 mA Output Calibration Setup of Electronic Equipment

Field Calibration Setup

Field calibration is performed without disconnecting the process piping. In order to do this, you must have a bypass and shutoff valves between the process and the transmitter and one of the following:

- Access to the process connections on the nonprocess side of the transmitter
- The optional vent screw in the side of the process covers.

If the transmitter is to be removed from the process for calibration, refer to "Bench Calibration Setup"below.

For field calibration, an adjustable air supply and a pressure measuring device are required. For example, a dead weight tester or an adjustable clean air supply and pressure gauge can be used. The pressure source can be connected to the transmitter process connection with pipe fittings or it can be connected to the vent screw assembly using a calibration screw. The calibration screw has a Polyflo fitting and can be used for pressures up to 700 kPa (100 psi). It is available as Foxboro Part Number F0101ES.

To set up the equipment, refer to Figure 33 and use the following procedure.

1. If the transmitter is in operation, follow the "Taking a Differential Pressure Transmitter Out of Operation" on page 35.

CAUTION

With liquid service, drain both sides of transmitter to avoid calibration errors.

2. If a calibration screw **is** being used, remove the vent screw and replace it with the calibration screw. Connect the pressure source to the calibration screw using 6 x 1 mm or 0.250 inch tubing.
   If a calibration screw is **not** being used, remove the entire vent screw assembly or drain

plug (as applicable) from the high pressure side of the transmitter. Connect calibration tubing using a suitable thread sealant.

3. Close the bypass valve opened in Step 1.
4. Complete the setup shown in Figure 33.

— NOTE

For vacuum applications, connect the calibrating pressure source to the low pressure side of the transmitter.

5. If calibrating the output signal, also connect equipment as shown in Figure 32.

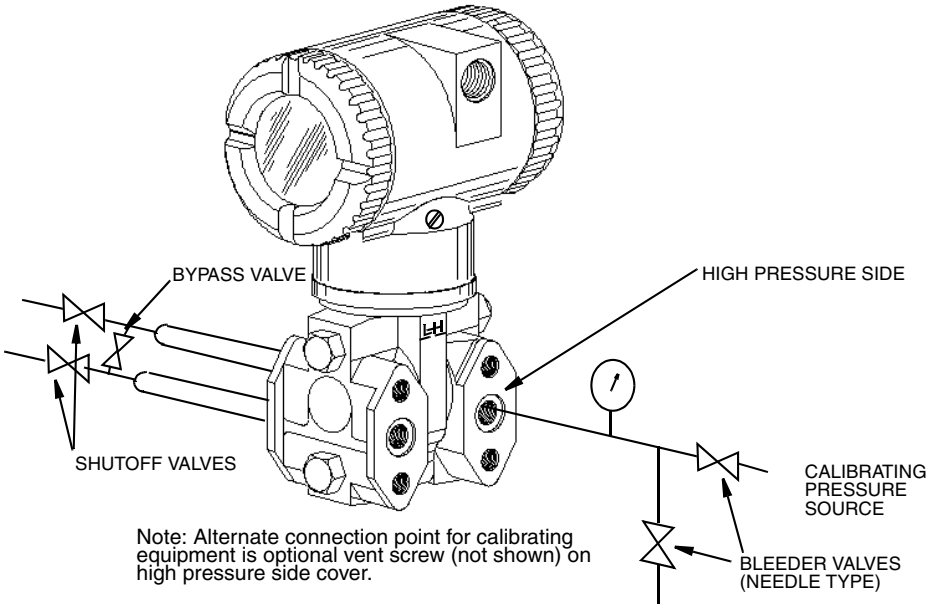

Figure 33. Field Calibration Setup

Bench Calibration Setup

The bench calibration setup requires disconnecting the process piping. For calibration setup without disconnecting the process piping, refer to “Field Calibration Setup”above.

The bench calibration setup is shown in Figure 34. Connect the input piping to the high pressure side of the transmitter as shown. Vent the low pressure side of the transmitter.

— NOTE

For vacuum applications, connect the calibrating pressure source to the low pressure side of the transmitter.

If calibrating the output signal, also connect equipment as shown in Figure 32.

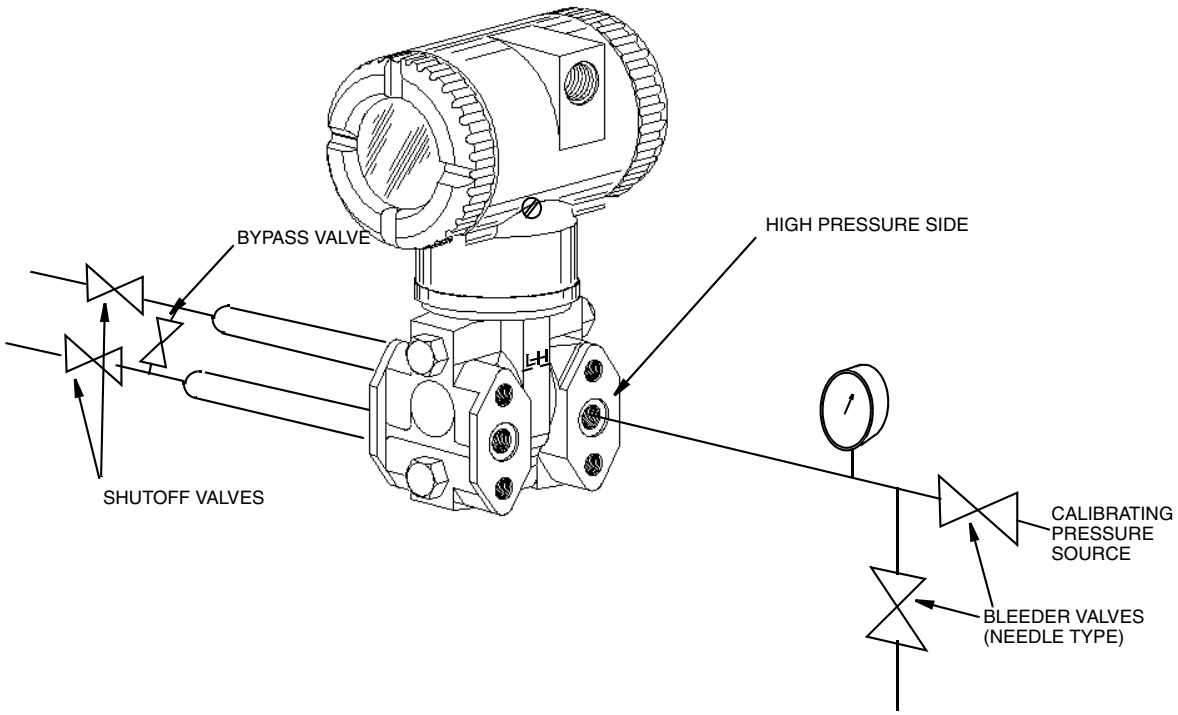

Figure 34. Bench Calibration Setup

Calibration Using a PC20

To calibrate the transmitter using a PC20 Configurator, follow the procedure in MI 020-495.

Calibration Using a PC50

To calibrate the transmitter using a PC50 Configurator, follow the procedure in MI 020-501 and MI 020-520.

Calibration Using a HART Communicator

To calibrate the transmitter using a HART Communicator, follow the procedure in MI 020-366.

Calibration Using the Optional Local Display

To access the Calibration mode (from normal operating mode), press the **Next** button. The display reads **CALIB**, the first item on the menu. Acknowledge your choice of this selection by pressing the **Enter** button. The display shows the first item in the Calibration menu.

— NOTE —

1. During calibration, a single change could affect several parameters. For this reason, if an entry is entered in error, re-examine the entire database or use the **Cancel** feature to restore the transmitter to its starting configuration and begin again.

2. During adjustment of 4 and 20 mA in the Calibration menu, the milliampere output does not reflect live measurement values.

Table 5. Calibration Menu

Item	Description
CAL AT0	Calibrate at zero pressure.
CAL LRV	Calibrate with pressure at 0% of transmitter range (LRV).
CAL URV	Calibrate with pressure at 100% of transmitter range (URV).
ADJ 4mA	Adjust nominal 4 mA output.
ADJ20mA	Adjust nominal 20 mA output.
CALDATE	Enter the calibration date.
ADJ 4mA causes the following four submenus.	
A 4mA∆∆∆	Increase 4 mA output by large step.
A 4mA∇∇	Decrease 4 mA output by large step.
A 4mA∆	Increase 4 mA output by small step.
A 4mA∇	Decrease 4 mA output by small step.
ADJ 20mA causes the following four submenus.	
A 20mA∆∆∆	Increase 20 mA output by large step.
A 20mA∇∇	Decrease 20 mA output by large step.
A 20mA∆	Increase 20 mA output by small step.
A 20mA∇	Decrease 20 mA output by small step.

NOTE

It is not necessary to use the **ADJ4mA** or **ADJ20mA** menu selections (commonly known as mA Trim) unless there is a plant requirement to make the 4 and 20 mA output values exactly match readings on certain plant calibration equipment and the calibration operations done result in a small but unacceptable difference between the transmitter mA output and the test equipment mA readout values.

Proceed to calibrate your transmitter by using the **Next** key to select your item and the **Enter** key to specify your selection per Figures 35 and 36. At any point in the calibration you can **Cancel**, restore your prior calibration and return to the on-line mode or **Save** your new calibration.

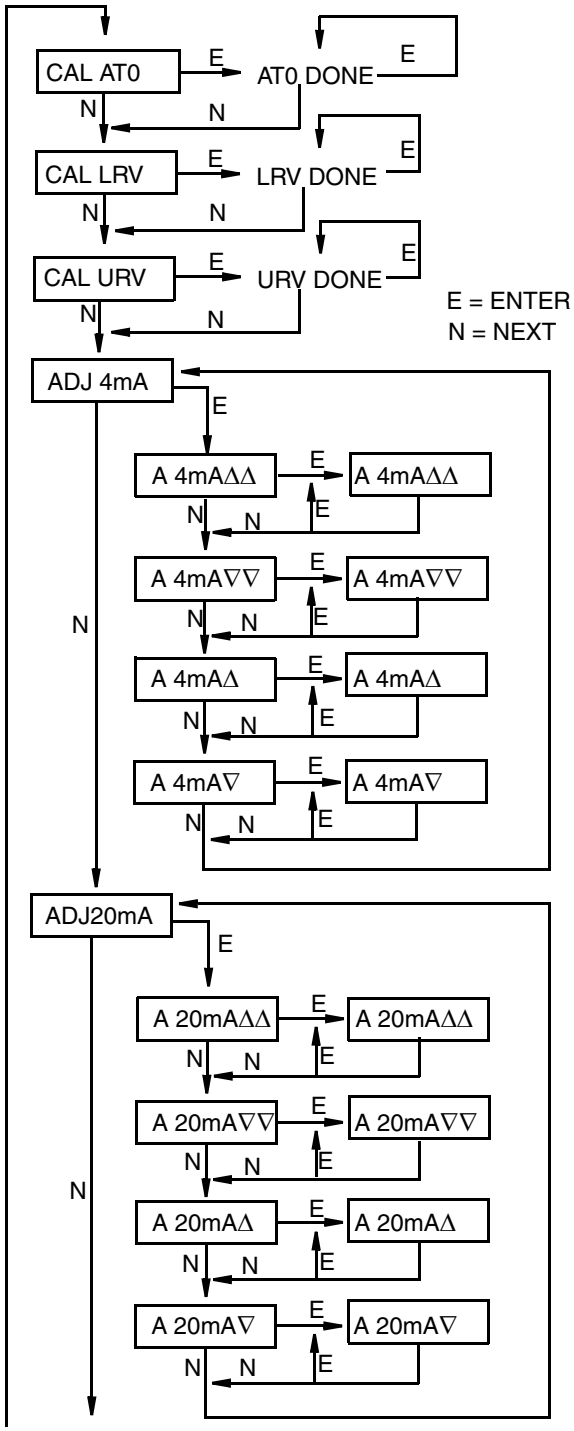

(continued on next figure)

CAL AT0: To set or reset the zero point at zero pressure, apply zero differential pressure to the transmitter and, at display of **CAL AT0**, press **Enter**. This can be done whether LRV is zero or not. Completion is indicated by the display **AT0 Done**.

CAL LRV: To set or reset 0% of range input, apply differential pressure to the transmitter equal to the lower range value (LRV) in the transmitter database and, at display of **CAL LRV**, press **Enter**. Completion is indicated by the display **LRV Done**.

CAL URV: To set or reset 100% of range input, apply differential pressure to the transmitter equal to the upper range value (URV) in the transmitter database and, at display of **CAL URV**, press **Enter**. Completion is indicated by the display **URV Done**.

ADJ4mA: If you configured your transmitter operating mode as 4 to 20 mA, you can adjust the 4 mA output by going to **ADJ4mA** using the **Next** button and press **Enter**. This menu item is bypassed if you configured your transmitter for multidrop mode (poll address other than zero).

To increase the 4 mA output by a large (0.025 mA) step, press **Enter** at the display **A 4mA**ΔΔ. To decrease it by a large step, go to

Figure 35. Calibration Structure Diagram

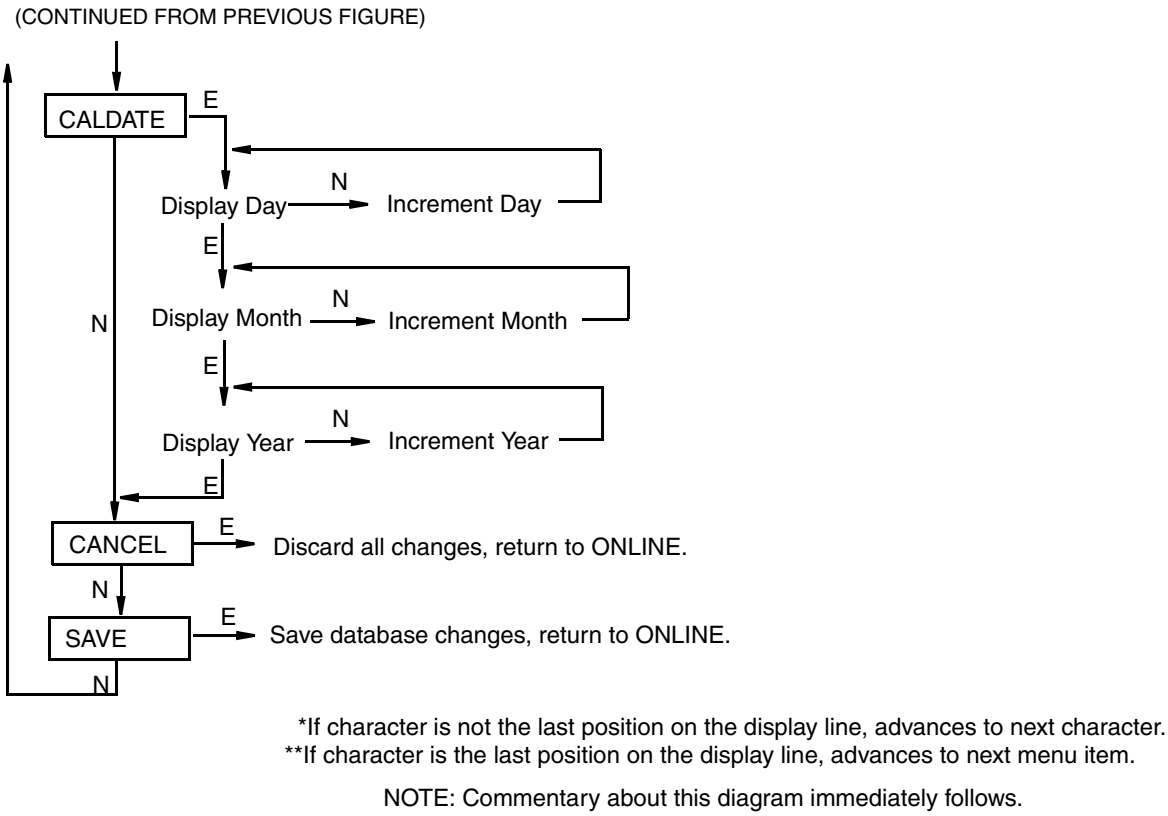

Figure 36. Calibration Structure Diagram (Continued)

Commentary on Figure 36

CALDATE:

This is not a required entry but can be used for recordkeeping or plant maintenance purposes. To edit the calibration date, go to **CALDATE** with the **Next** button and press **Enter**. You then can change the day, month, and year. The display shows the last date with the day flashing. Use the **Next** button to step through the menu of digits to select the desired day, then press **Enter**. Repeat this process for the month and year.

Zero Adjustment Using External Zero Button

An optional external zero adjustment mechanism in the electronics housing allows calibration at zero differential pressure (the **CAL AT0** function) or at the lower range value differential pressure (the **CAL LRV** function) without removing the electronics compartment cover. The mechanism is magnetically activated through the housing wall to prevent moisture from entering the enclosure.

— NOTE

Do **not** use CAL AT0 if pressure seals are used that are at different elevations from the transmitter.

To use this feature:

1. Unlatch the external zero button by turning it 90° in a counterclockwise direction so that the screwdriver slot lines up with the two holes in the face of the adjacent part. Do **not** push the button in with the screwdriver while doing this.
2. To set or reset the zero point at zero differential pressure, apply zero differential pressure to the transmitter or use a bypass valve to equalize pressure on both sides of the transmitter. Press the external zero button until the display reads **CAL AT0**. Release the button. The display reads **CAL WAIT** and then **RESET** (calibration is complete).

   To set or reset the 0% of range input, apply the lower range value (LRV) differential pressure to the transmitter and press and hold the external zero button until the display reads **CAL LRV** (it reads **CAL AT0** first). Release the button. The display reads **CAL WAIT** and then **RESET** (calibration is complete).

— NOTE

If the optional display is not present, the same functions can be accomplished by depending on the length of time the external zero button is depressed. Press and hold the button for 1 to 3 seconds for **CAL AT0** or for 5 or more seconds for **CAL LRV**. Therefore, if your LRV is zero, just depress the button for a few seconds. However, if your LRV is not zero, use **caution** when using the external zero button without the optional display because you must rely strictly on the length of time the button is depressed to differentiate between **CAL AT0** and **CAL LRV**.

   Other possible messages are:
   DISABLD if **EX ZERO** is configured **EXZ DIS**
   IGNORED if the transmitter is not in the on-line mode.
   WP ENAB if write protection jumper is in write protect position.

   If additional rezeroing is required after Steps 1 and 2 have been accomplished, repeat Step 2.
3. Relatch the external zero button by turning it 90° in a clockwise direction to prevent accidental pressing of the button. Do **not** push the button in with the screwdriver while doing this.

Error Messages

Table 6. Calibration Error Messages

Parameter	Condition Tested	Error Message	User Action
Password Protection	Password	BAD PWD	Bad password entered, use another.
Write Protection	Write protection enabled	REJECT	Displays when user attempts an action that is write protected.
ZERO	Internal offset too large	BADZERO	Check applied pressure, configured **M1 LRV** and configured **M1 EOFF**.
SPAN	Slope too large or too small	BADSPAN	Check applied pressure, configured **M1 LRV** and configured **M1 EFAC**.
M1 URV	M1URV > max pressure in EGU	URV>FMX	Entered pressure is greater than maximum rated pressure of transmitter. Check entry. Verify EGUs.
	M1URV < min pressure in EGU	URV<FMN	Entered pressure is less than minimum rated pressure of transmitter. Check entry. Verify EGUs.
	M1 URV = M1 LRV	LRV=URV	Cannot set span to 0. Check entry. Check **M1 LRV**.
	M1 turndown exceeds limit	BADTDWN	Check entry. Check **M1 LRV**.
	URV < 0 with M1 or M2 SqRt	URV<LRV	Square root mode with nonzero LRV is not valid. Change LRV to 0.
M1 LRV	M1LRV > max pressure in EGU	LRV>FMX	Entered pressure is greater than maximum rated pressure of transmitter. Check entry. Verify EGUs.
	M1LRV < min pressure in EGU	LRV<FMN	Entered pressure is less than minimum rated pressure of transmitter. Check entry. Verify EGUs.
	M1 URV = M1 LRV	LRV=URV	Cannot set span to 0. check entry. Check **M1 URV**.
	M1 turndown exceeds limit	BADTDWN	Check entry. Check **M1 URV**.

5. Configuration

Configurable Parameters

Table 7 lists all the configurable parameters and the factory default for the IDP10-T Transmitters. The factory default values have been customized if the transmitter was ordered with optional feature -C2. The table also shows which parameters are configurable with the integral vs. remote configurators.

Table 7. IDP10-T Configurable Parameters

Parameter	Capability	Factory Default	Configurable with		Application Requirement
			Integ. Indic.	Remote Config.	
Descriptors					
Tag Number	8 characters max	Tag Number	No	Yes	
Descriptor	16 characters max	Tag Name	No	Yes	
Message	32 characters max	Inst Location	No	Yes	
Input					
Calibrated Range	LRV to URV in units listed in (a) below	See (b) below when not specified per S.O.	Yes	Yes	
Output					
Measurement #1 Output (PV)	4 to 20 mA or Fixed Current. Specify Poll Address (1-15) for Fixed Current.	4 to 20 mA	Yes	Yes	
Measurement #1 Mode	Linear or type of square root in (d) below	Linear	Yes	Yes	
Measurement #1 EGUs	If linear, select from units listed in (a) below; If Sq.Rt., select from units listed in (c) below	Units of Calibrated Range	Yes	Yes	
Measurement #2 Mode (SV)	Linear or type of square root in (d) below	Linear	Yes	Yes	
Measurement #2 EGUs	If linear, select from units listed in (a) below; If Sq.Rt., select from units listed in (c) below	Units of Calibrated Range	Yes	Yes	
Temp. Sensor Fail Strategy	Normal oper. or failsafe	Fail-safe	Yes		
Fail-safe	High or Low	High	Yes	Yes	
External Zero	Enabled or Disabled	Enabled	Yes	Yes	
Damping	0 to 32 seconds.	None	Yes	Yes	

Table 7. IDP10-T Configurable Parameters (Continued)

Parameter	Capability	Factory Default	Configurable with		Application Requirement
			Integ. Indic.	Remote Config.	
Poll Address	0 - 15	0	Yes	Yes	
LCD Indicator (e)	Meas #1 EGU or % Lin	Meas #1 EGU	Yes	No	

(a) psi, inHg, ftH_2O, inH_2O, atm, bar, mbar, MPa, kPa, Pa, kg/cm^2, g/cm^2, mmHg, torr, mmH_2O.

(b) Span Code A: 0 to 30 inH_2O; Span Code B: 0 to 200 inH_2O; Span Code C: 0 to 30 psi; Span Code D: 0 to 300 psi; Span Code E: 0 to 3000 psi.

(c) gal/s, gal/m, gal/h, gal/d, Mgal/d, ft^3/s, ft^3/m, ft^3/h, ft^3/d, Igal/s, Igal/m, Igal/h, Igal/d, l/s, l/m, l/h, Ml/d, m^3/s, m^3/m, m^3/h, m^3/d, bbl/s, bbl/m, bbl/h, bbl/d, %flow.

(d) Square root with cutoff below 1% of calibrated pressure range or with linear below 4% of calibrated pressure range.

(e) Measurement #2 can be displayed at any time by pressing the **Enter** button regardless of the local display configuration. This reverts to Measurement #1 or % Lin (as configured) when power is cycled off and on.

Configuration Using a PC20

To configure the transmitter using a PC20 Configurator, follow the procedure in MI 020-495.

Configuration Using a PC50

To configure the transmitter using a PC50 Configurator, follow the procedure in MI 020-501 and MI 020-520.

Configuration Using a HART Communicator

To configure the transmitter using a HART Communicator, follow the procedure in MI 020-366.

Configuration Using the Optional Local Display

You can access the Configuration mode by the same multi-level menu system that was used to enter Calibration mode. Entry to the Mode Select menu is made (from normal operating mode) by pressing the **Next** button. The display reads **CALIB**, the first item on the menu. Press the **Next** button again to get to the second item on the menu, **CONFIG**. Acknowledge your choice of this selection by pressing the **Enter** button. The display shows the first item in the Configuration menu. You can then configure items shown in Table 8. The standard factory default configuration is also given in this table.

The standard factory default configuration is not used if custom configuration option -C2 has been specified. Option -C2 is a full factory configuration of all parameters to the user's specifications.

NOTE

1. You can configure most parameters using the local display. However, for more complete configuration capability, use a HART Communicator or PC-Based configurator.
2. During configuration, a single change can affect several parameters. For this reason, if an entry is entered in error, re-examine the entire database or use the **Cancel** feature to restore the transmitter to its starting configuration and begin again.

Table 8. Configuration Menu

Item	Description	Initial Factory Configuration
POLLADR	Poll Address: 0 - 15	0
EX ZERO[a]	External Zero: enable or disable	Enable
S2 FAIL	Temperature Sensor Failure Strategy: S2FATAL or S2NOFTL	S2FATAL
OUT DIR	4 to 20 mA Output: forward or reverse	Forward
OUTFAIL	4 to 20 mA Output: fail mode output - low or high	High
OFFL MA	4 to 20 mA Output in offline mode - last or user set	USER MA
DAMPING	Damping: none, 1/4, 1/2, 1, 2, 4, 8, 16, or 32 seconds	None
M1 MODE	Output: linear or type of square root[b]	Linear
M1DISP	Local Indicator Display in linear mode: in percent or engineering units	M1EGU
M1 EGU	User-Defined Engineering Units	inH_2O or psi
M1 URV	Primary Upper Range Value	URL
M1 LRV	Primary Lower Range Value	0
M2 MODE	Output: linear or type of square root	Linear
M2 EGU	User-Defined Engineering Units	Same as M1 EGU
DISPLAY	Display M1, M2, or Toggle between M1 and M2	M1
CALDATE	Calibration Date	- - -
ENA PWD	Enable password; no password, configuration only, or configuration and calibration	NO PWD
CFG PWD	User set configuration password (six characters)	- - -
CAL PWD	User set calibration password (six characters)	- - -
SET GDB	Rewrite all calibration and configuration values with default values	- - -

(a) Applies only if transmitter contains External Zero option.

(b) Square root is not applicable to absolute pressure, gauge pressure, and flange level measurement.

Proceed to configure your transmitter by using the **Next** button to select your item and the **Enter** button to specify your selection per the following three figures. At any point in the configuration you can **Cancel** your changes and return to the on-line mode, or **Save** your changes.

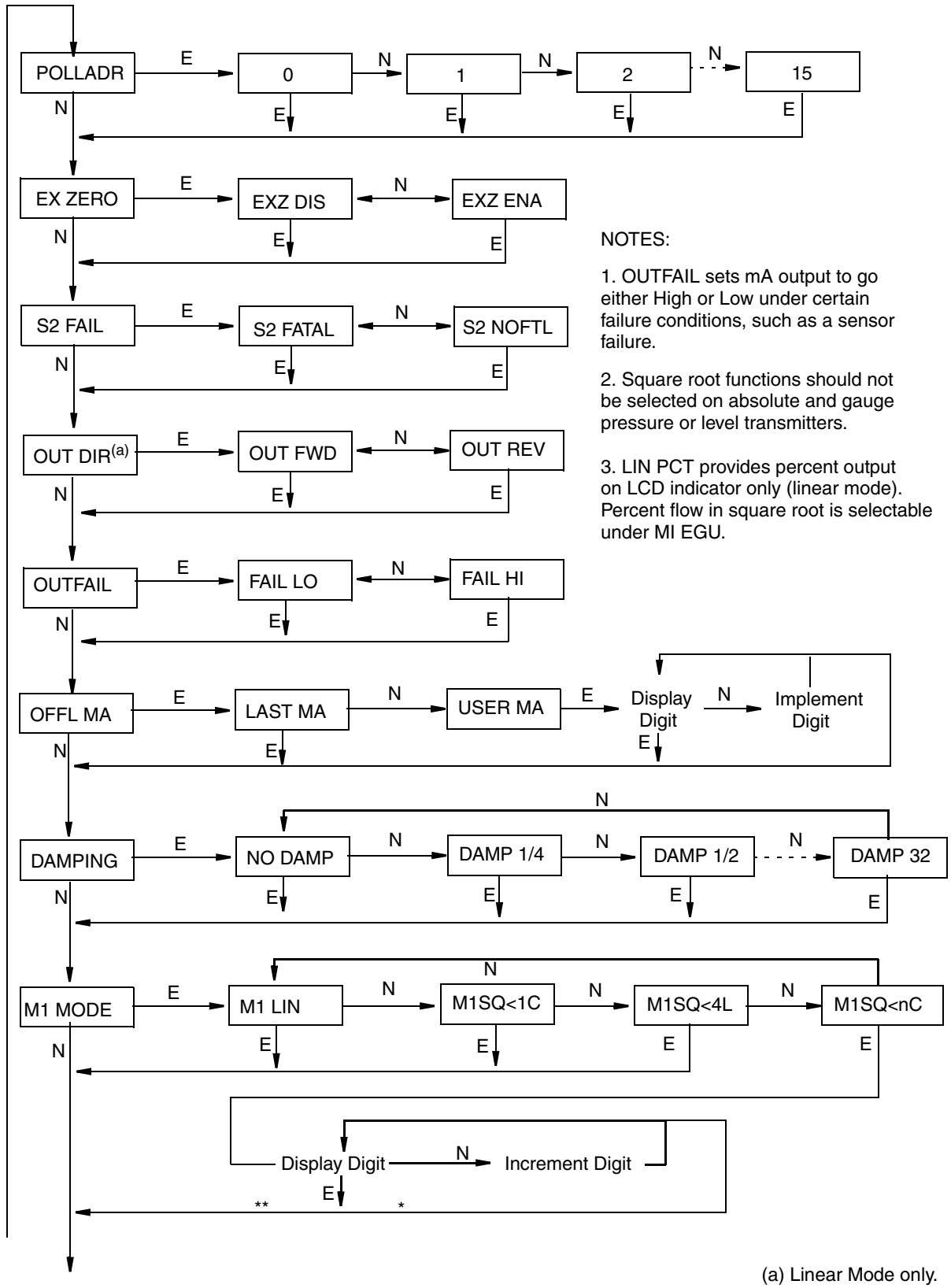

NOTES:

1. OUTFAIL sets mA output to go either High or Low under certain failure conditions, such as a sensor failure.

2. Square root functions should not be selected on absolute and gauge pressure or level transmitters.

3. LIN PCT provides percent output on LCD indicator only (linear mode). Percent flow in square root is selectable under MI EGU.

(a) Linear Mode only.

(continued on next figure)

Figure 37. Configuration Structure Diagram

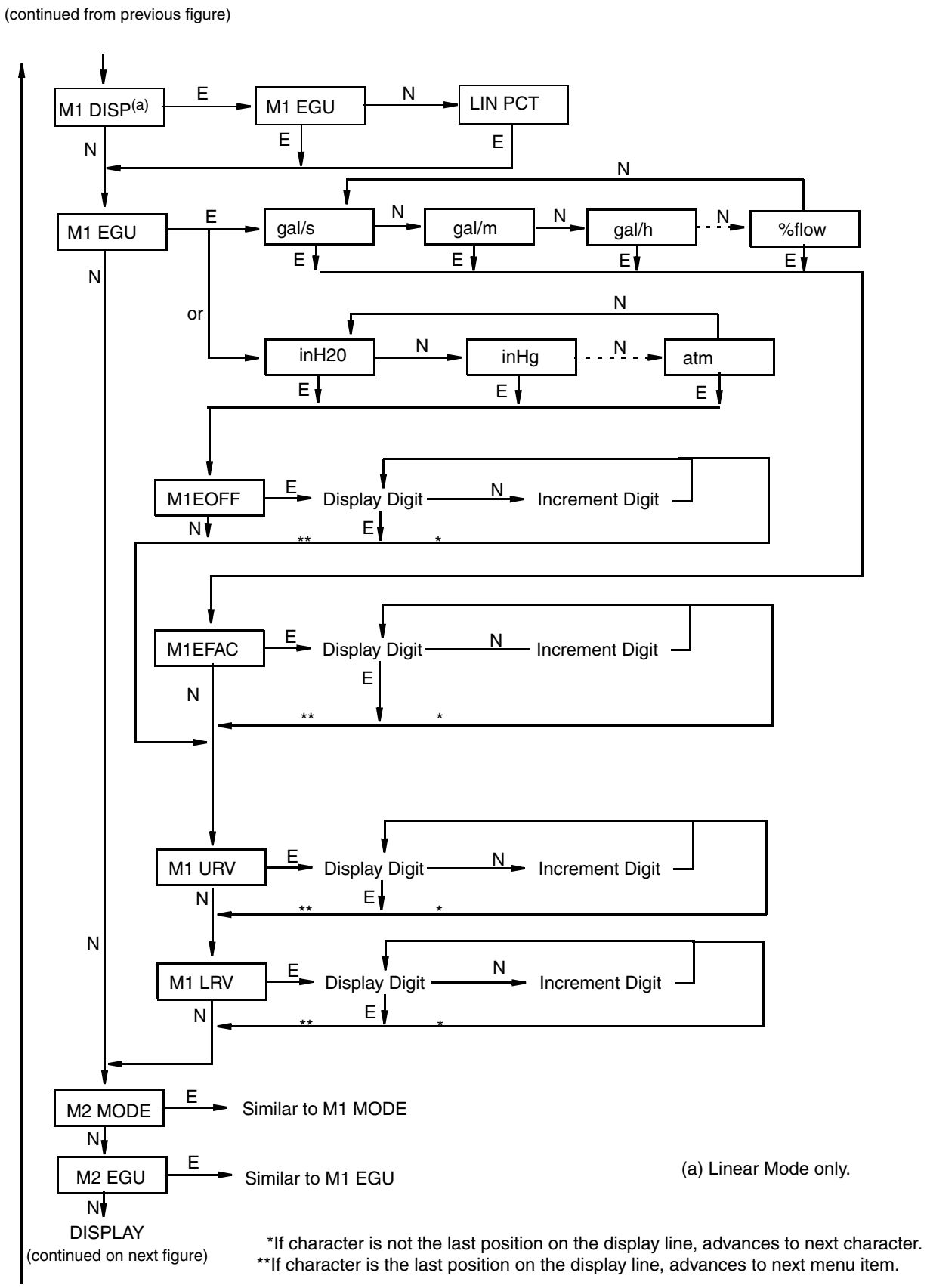

Figure 38. Configuration Structure Diagram (Continued)

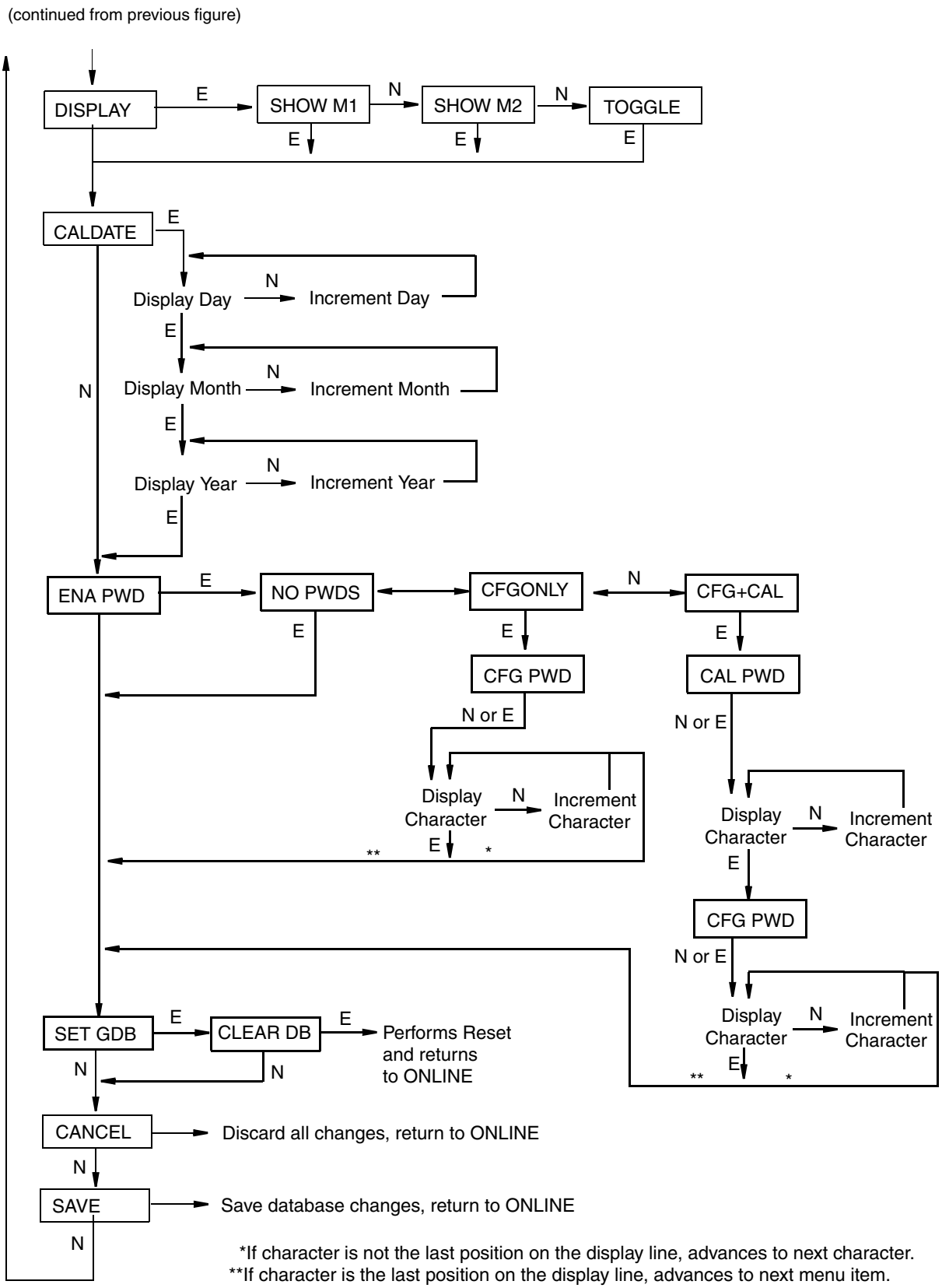

Figure 39. Configuration Structure Diagram (Continued)

Commentary on Configuration Structure Diagram

In general, use the **Next** button to select your item and the **Enter** button to specify your selection.

POLLADR:

To configure the transmitter poll address, press **Enter**. Use the **Next** button to select an address of **0** through **15**, then press **Enter**. An address of 1 through 15 is used for multidrop mode with a fixed mA output.

EX ZERO:

The External Zero feature allows the optional external zero pushbutton to be disabled for additional security. To configure this feature, go to **EX ZERO** with the **Next** button and press **Enter**. Use the **Next** button to select **EXZ DIS** or **EXZ ENA** and press **Enter**.

S2 FAIL:

The temperature sensor compensates for changes in temperature in the transmitter electronics. Failure of this sensor can cause a 4 to 20 mA accuracy change of up to 0.25%. The **S2 FAIL** feature allows you to specify action (or no action) if such a failure occurs. To configure this feature, go to **S2 FAIL** with the **Next** button and press **Enter**. Use the **Next** button to select **S2 FATAL** (to have the output go to that configured in **OUTFAIL**) or **S2 NOFTL** (to continue operation with a temperature sensor failure). This parameter has no effect if **POLLADR** is configured to any number from **1** through **15** and is bypassed if **M1 MODE** or **M2 MODE** is configured as square root.

OUT DIR:

To configure the Output Direction, go to **OUT DIR** with the **Next** button and press **Enter**. Use the **Next** button to select **OUT FWD** (4 - 20 mA) or **OUT REV** (20 - 4 mA) and press **Enter**. This parameter has no effect if **POLLADR** is configured to any number from **1** through **15** and is bypassed if **M1 MODE** or **M2 MODE** is configured as square root.

OUTFAIL:

The Outfail feature provides high or low output with certain malfunctions. To configure the fail mode output, go to **OUTFAIL** with the **Next** button and press **Enter**. Use the **Next** button to select **FAIL LO** or **FAIL HI** and press **Enter**. This parameter has no effect if **POLLADR** is configured to any number from **1** through **15**.

OFFL MA:

The Off-line mA feature enables you to set the output to a specified value or to the last value if the transmitter goes off-line. To configure the off-line output, go to **OFFL MA** with the **Next** button and press **Enter**. Use the **Next** button to select **LAST MA** or **USER MA** and press **Enter**. If you selected **USER MA**, press **Enter** again at the display of digits. Then use the **Next** button to step through the library of digits to select the desired first digit, then press **Enter**. Your selection is entered and the second character flashes. Repeat this procedure until you have entered the last digit. Then use the **Next** button to move the decimal point to its desired location and press **Enter**. The display advances to the next menu item.

DAMPING:

To configure additional damping, go to **DAMPING** with the **Next** button and press **Enter**. Use the **NEXT** button to select **NO DAMP**, **DAMP 1/4**, **DAMP 1/2**, **DAMP 1**, **DAMP 2**, **DAMP 4**, **DAMP 8**, **DAMP 16**, or **DAMP 32** and press **Enter**.

M1 MODE:

To configure the mode of the primary output (PV), go to **M1 MODE** with the **Next** button and press **Enter**. Use the **Next** button to select **M1 LIN** (linear), **M1SQ<1C** (square root with cutoff below 1% dp (M1 URV in linear units of dp), **M1SQ<4L** (square root with linear below 4% of dp (M1 URV in linear units of dp), or **M1SQ<nC** (square root with user configured cutoff specified between 0 and 20% of the flow upper range value, M1 EFAC) and press **Enter**. You cannot configure this parameter as square root if **OUT DIR** was configured as **OUT REV** or if M1LRV is not zero.

— NOTE

Cutoff in **M1SQ<1C** and **M1SQ<4L** is in percent of differential pressure but cutoff in **M1SQ<nC** is in percent of flow rate.

M1 DISP:

To configure the optional local indicator to show engineering units or percent in linear mode, go to **M1 DISP** with the **Next** button and press **Enter**. Use the **Next** button to select **M1 EGU** or **LIN PCT** and press **Enter**. **LIN PCT** only provides percent readings on the local display. The M1 engineering unit is used for remote communication of Measurement #1, even if **LIN PCT** is selected.

M1 EGU:

To configure pressure or flow engineering units for your display and transmission, go to **M1 EGU** with the **Next** button and press **Enter**. If **M1 MODE** is configured as **M1 LIN**, you are asked to specify one of the following pressure labels: **psi**, **inHg**, **ftH$_2$O**, **inH$_2$O**, **atm**, **bar**, **mbar**, **MPa**, **Pa**, **kPa**, **kg/cm^2**, **g/cm^2**, **mmHg**, **torr**, **mmH$_2$O, mH$_2$O**. or **hW60** (inH2O at 60°F). Your transmitter then automatically adjusts **M1EFAC** (engineering factor), **M1 URV** (upper range value), and **M1 LRV** (lower range value). **M1EOFF** is set to zero.

If **M1 MODE** is configured as **M1 SQ<1C, M1SQ<4L, or M1 SQ<nC**, you are asked to specify one of the following flow labels: **%flow, gal/s**, **gal/m**, **gal/h**, **gal/d**, **Mgal/d**, **ft^3/s**, **ft^3/m**, **ft^3/h**, **ft^3/d**, **lgal/s**, **lgal/m**, **lgal/h**, **lgal/d**, **l/s**, **l/m**, **l/h**, **Ml/d**, **m^3/s**, **m^3/m**, **m^3/h**, **m^3/d**, **bbl/s**, **bbl/m**, **bbl/h**, **bbl/d**, **T/h**, **lb/h**, **kg/h**, **Nm^3/h** (normal m^3/h), **Sm^3/h** (standard m^3/h), **Am^3/h** (actual m^3/h), or **MMSCFD** (million scfd). Check the **M1EFAC** (engineering factor) and, if necessary, adjust it as follows:

M1EFAC:

This parameter is used to input the numerical relationship between the measured span in pressure units and the displayed (and transmitted) span in flow units. It is the displayed URV in flow units (which is also the span in flow units since flow ranges must be zero-based).

Example:

For a 200 inH_2O transmitter with a measured range of 0 to 100 inH_2O and displayed range of 0 to 500 gal/m, **M1EFAC** = 500.

To edit the span in your configured flow units, press **Enter** at the prompt **M1EFAC**. Use the procedure "Entering Numerical Values" on page 38 to edit this parameter.

M1 URV:

To edit the upper range value, press **Enter** at the prompt **M1 URV**. Use the procedure "Entering Numerical Values" on page 38 section to edit this parameter.

M1 LRV:

Similar to **M1URV** immediately above.

— NOTE

M1 LRV is bypassed if **M1 MODE** is configured as square root since **M1 LRV** must be zero.

M2 MODE:

M2 is a secondary measurement (SV) that is read by the HART Communicator and can be displayed on the optional display. You might use this feature to display M1 in flow units and M2 in comparable pressure units. To configure this parameter, go to **M2 MODE** with the **Next** button and press **Enter**. Use the **Next** button to select **M2 LIN** (linear), **M2SQ<1C** (square root with cutoff below 1% dp (M2 URV in linear units of dp), **M2SQ<4L** (square root with linear below 4% of dp (M2 URV in linear units of dp), or **M2SQ<nC** (square root with cutoff specified between 0 and 20% of the flow upper range value, M2 EFAC) and press **Enter**.

M2 EGU:

Similar to **M1 EGU**.

DISPLAY:

To display M1, M2, or to toggle between M1 and M2, go to **DISPLAY** with the **Next** button and press **Enter**. Use the **Next** button to select **SHOW M1**, **SHOW M2**, or **TOGGLE** and press **Enter**.

CALDATE:

This is not a required entry but can be used for record-keeping or plant maintenance purposes. To edit the calibration date, go to **CALDATE** with the **Next** button and press **Enter**. You then can change the day, month, and year. The display shows the last date with the day flashing. Use the **Next** button to step through the library of digits to select the desired day, then press **Enter**. Repeat this process for the month and year.

ENA PWD:

To enable or disable the password feature, go to **ENA PWD** with the **Next** button and press **Enter**. Use the **Next** button to select **NO PWDS** (password not required for either calibration or configuration), **CFGONLY** (password required to configure but not to calibrate), or **CFG+CAL** (passwords required to both configure and calibrate) and press **Enter**.

If you selected **CFG ONLY**, the display changes to **CFG PWD**. Press either the **Next** or **Enter** button. Use the **Next** button to step through the library of characters to select the

desired first character, then press **Enter**. Your selection is entered and the second character flashes. Repeat this procedure until you have created your password. If the password has less than six characters, use blanks for the remaining spaces. When you have configured the sixth space, the display advances to the next menu item.

If you selected **CFG+CAL**, the display changes to **CAL PWD**. To create the Calibration password, press either the **Next** or **Enter** button. Use the **Next** button to step through the library of characters to select the desired first character, then press **Enter**. Your selection is entered and the second character flashes. Repeat this procedure until you have created your password. If the password has less than six characters, use blanks for the remaining spaces. When you have configured the sixth space, the display advances to **CFG PWD**. Use the same procedure to create the configuration password.

NOTE

In normal operation, the CAL PWD allows access to only calibration mode. The CFG PWD allows access to both configuration and calibration.

CAUTION

Record your new password before saving changes to the database.

SET GDB:

If your transmitter database becomes corrupted and you receive an **INITERR** message upon startup, this function enables you to rewrite all calibration and configuration values with default values.

CAUTION

Any calibration and configuration values that you have entered will be lost. Therefore, **SET GDB** should **not** be selected if your transmitter is functioning normally.

Character Lists

Table 9. Alphanumeric Character List

Character List*	
@	‘
, (comma)	(
A-Z (uppercase)	)
[	*
\	+
]	-
^	.
_ (underscore)	/
space	0-9
!	:
“	;
#	<
$	>
%	=
&	?

*List only applies to Model 275 HART Communicator not to optional local display.

Table 10. Numeric Character List

Character List
–
. (decimal point)
0 through 9

Error Messages

Table 11. Configuration Error Messages

Parameter	Condition Tested	Error Message	User Action
Password Protection	Password	BAD PWD	Bad password entered, use another.
Write Protection	Write Protection Enabled	REJECT	Displays when user attempts an action that is write protected.
M1 MODE (being changed to square root)	M1 LRV ≠ 0	LRVnot0	Square root mode with nonzero LRV is not valid. Change **M1 LRV** to 0.
	M1 URV < 0	URV<LRV	Square root mode with negative URV is not valid. Change **M1 URV** to positive value.
	OUT DIR is OUT REV	URV<LRV	Square root mode with URV < LRV is not valid. Change **M1 LRV** to 0 and **M1 URV** to positive value.
	M1EFAC < 0	-M1EFAC	Negative **M1 EFAC** is not valid. Change **M1 EFAC** to positive value.
	M2EFAC < 0	-M2EFAC	Negative **M2 EFAC** is not valid. Change **M2 EFAC** to positive value.
	M1EFAC = 0	0M1EFAC	**M1 EFAC** = 0 is not valid. Change **M1 EFAC** to positive value.
	M2EFAC = 0	0M2EFAC	**M2 EFAC** = 0 is not valid. Change **M2 EFAC** to positive value.
	M1EOFF ≠ 0 or M2EOFF ≠ 0	BADEOFF	Square root mode with nonzero **M1 EOFF** and **M2 EOFF** is not valid. Change **M1 EOFF** and **M2 EOFF** to 0.
M1EFAC	M1EFAC < 0	-M1EFAC	Negative **M1 EFAC** is not valid. Change **M1 EFAC** to positive value.
	M1EFAC = 0	0M1EFAC	**M1 EFAC** = 0 is not valid. Change **M1 EFAC** to positive value.
M1 URV	M1URV > max pressure in EGU	URV>FMX	Entered pressure is greater than maximum rated pressure of transmitter. Check entry. Verify EGUs.
	M1URV < min pressure in EGU	URV<FMN	Entered pressure is less than minimum rated pressure of transmitter. Check entry. Verify EGUs.
	M1 URV = M1 LRV	LRV=URV	Cannot set span to 0. Check entry. Check **M1 LRV**.
	M1 turndown exceeds limit	BADTDWN	Check entry. Check **M1 LRV**.
	URV <0 with M1 or M2 SqRt	URV<LRV	Square root mode with nonzero LRV is not valid. Change **M1 LRV** to 0.

Table 11. Configuration Error Messages (Continued)

Parameter	Condition Tested	Error Message	User Action
M1 LRV	M1LRV > max pressure in EGU	LRV>FMX	Entered pressure is greater than maximum rated pressure of transmitter. Check entry. Verify EGUs.
	M1LRV < min pressure in EGU	LRV<FMN	Entered pressure is less than minimum rated pressure of transmitter. Check entry. Verify EGUs.
	M1 URV = M1 LRV	LRV=URV	Cannot set span to 0. Check entry. Check **M1 URV**.
	M1 turndown exceeds limit	BADTDWN	Check entry. Check **M1 URV**.
M2 MODE (being changed to square root)	M1 LRV ≠ 0	LRVnot0	Square root mode with nonzero LRV is not valid. Change **M1 LRV** to 0.
	M1 URV < 0	URV<LRV	Square root mode with negative URV is not valid. Change **M1 URV** to positive value.
	OUT DIR is OUT REV	URV<LRV	Square root mode with URV < LRV is not valid. Change **M1 LRV** to 0 and **M1 URV** to positive value.
	M1EFAC < 0	-M1EFAC	Negative **M1 EFAC** is not valid. Change **M1 EFAC** to positive value.
	M2EFAC < 0	-M2EFAC	Negative **M2 EFAC** is not valid. Change **M2 EFAC** to positive value.
	M1EFAC = 0	0M1EFAC	**M1 EFAC** = 0 is not valid. Change **M1 EFAC** to positive value.
	M2EFAC = 0	0M2EFAC	**M2 EFAC** = 0 is not valid. Change **M2 EFAC** to positive value.
	M1EOFF ≠ 0 or M2EOFF ≠ 0	BADEOFF	Square root mode with nonzero **M1 EOFF** and **M2 EOFF** is not valid. Change **M1 EOFF** and **M2 EOFF** to 0.
M2EFAC	M2EFAC < 0	-M2EFAC	Negative **M2 EFAC** is not valid. Change **M2 EFAC** to positive value.
	M2EFAC = 0	0M2EFAC	**M2 EFAC** = 0 is not valid. Change **M2 EFAC** to positive value.

6. Maintenance

DANGER

For nonintrinsically safe installations, to prevent a potential explosion in a Division 1 hazardous area, de-energize transmitters before you remove threaded housing covers. Failure to comply with this warning could result in an explosion resulting in severe injury or death.

Error Messages

For error messages displayed on the HART Communicator refer to MI 020-366.

Parts Replacement

Parts replacement is generally limited to the electronics module assembly, housing assembly, sensor assembly, terminal block assembly, cover O-rings, and optional display. For part numbers relating to the transmitter and its options, see PL 009-005.

Replacing the Terminal Block Assembly

1. Turn off transmitter power source.
2. Remove the Field Terminals and the Electronics compartment covers by rotating them counterclockwise. Screw in cover lock if applicable.
3. Remove the digital display (if applicable) as follows: grasp the two tabs on the display and rotate it about 10° in a counterclockwise direction.
4. Remove the electronics module from the housing by loosening the two captive screws that secure it to the housing. Then pull the module out of the housing far enough to gain access to the cable connectors on the rear of the module.
5. Remove the four socket head screws securing the terminal block.
6. Disconnect the terminal block cable connector from the electronics module.
7. Remove the terminal block and the gasket under it.
8. Connect the new terminal block cable connector to the electronics module.
9. Install the new terminal block and new gasket and reinstall the four screws to 0.67 N·m (6 in·lb) in several even increments.
10. Reinstall the electronics module (and digital display if applicable).
11. Reinstall the covers onto the housing by rotating them clockwise to seat the O-ring into the housing and then continue to hand tighten until the each cover contacts the housing metal-to-metal. If cover locks are present, lock the cover per the procedure described in “Cover Locks” on page 29.
12. Turn on transmitter power source.

Replacing the Electronics Module Assembly

To replace the electronics module assembly, refer to Figure 40 and proceed as follows:

1. Turn off transmitter power source.
2. Remove the electronics compartment cover by rotating it counterclockwise. Screw in cover lock if applicable.
3. Remove the digital display (if applicable) as follows: grasp the two tabs on the display and rotate it about 10° in a counterclockwise direction. Pull out the display and disconnect its cable.
4. Remove the electronics module from the housing by loosening the two captive screws that secure it to the housing. Then pull the module out of the housing far enough to gain access to the cable connectors on the rear of the module.

CAUTION

The electronics module is "one assembly" at this point and is electrically and mechanically connected to topworks with a flexible ribbon signal cable, a 2-wire power cable, and in some cases, a cable for an external zero pushbutton. Do **not** exceed the slack available in these cables when removing the assembled module.

5. Unplug all cable connectors from the rear of the electronics module and place the module on a clean surface.
6. Predetermine connector orientation, then insert the cable connectors into the replacement module. Replace the module in the housing using care not to pinch the cables between the module and the housing. Tighten the two screws that secure the module to the housing.
7. Connect the cable from the digital display to the electronics module. Ensure that the O-ring is fully seated in the display housing. Then, holding the digital display by the tabs at the sides of the display, insert it into the housing. Secure the display to the housing by aligning the tabs on the sides of the assembly and rotating it about 10° in a clockwise direction.
8. Reinstall the cover onto the housing by rotating it clockwise to seat the O-ring into the housing and then continue to hand tighten until the cover contacts the housing metal-to-metal. If cover locks are present, lock the cover per the procedure described in "Cover Locks" on page 29.
9. Turn on transmitter power source.

The module replacement procedure is now complete.

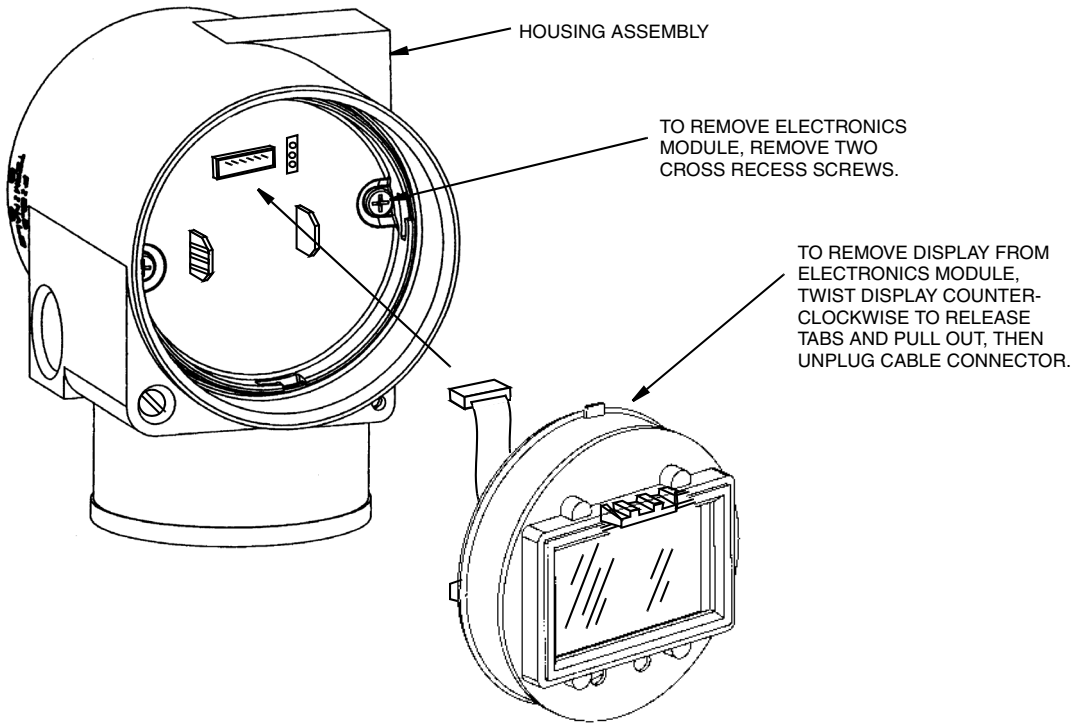

Figure 40. Replacing the Electronics Module Assembly and Display

Removing and Reinstalling a Housing Assembly

To remove and reinstall a housing assembly, refer to Figure 40 and proceed as follows:

1. Remove the electronics module per Steps 1 through 5 in the previous procedure.
2. If your housing has an anti-rotation screw, remove the red lacquer from the screw recess. Turn the screw three full turns counterclockwise.
3. If your housing has a retention clip, remove the red lacquer from the screw recess. Remove the screw completely, and slide the clip off the housing. Save the clip and screw for future use,
4. Remove the housing by rotating it counterclockwise (when viewed from the top). Use caution to avoid damaging the sensor cable.
5. Inspect the sensor O-ring for damage. If the O-ring is damaged, replace it with the appropriate O-ring (see parts list for your transmitter). Lubricate the O-ring with silicone lubricant (Foxboro Part Number 0048130 or equivalent). Verify that the O-ring is situated in the groove of the neck.

WARNING

Failure to reuse or install the proper O-ring for a CSA labeled product violates ANSI / ISA 12.27.01.

6. Feed the sensor cable through the housing neck into the electronics compartment.
7. Screw the housing onto the sensor neck until it bottoms. Do not over tighten. Be careful not to damage the sensor cable or dislodge the neck O-ring.

8. If your housing has an anti-rotation screw, engage the screw until it touches the sensor neck and back it off 1/8th turn. It is important that the screw is not touching the sensor. Fill the screw recess with red lacquer (Foxboro Part Number X0180GS or equivalent). The housing can then be rotated up to one full turn counterclockwise for optimum access.
9. If your housing has a retention clip, insert the clip over the boss in the housing neck so that the hole in the clip is aligned with the hole in the boss. Install the screw but do not tighten. Rotate the housing up to one full turn counterclockwise for optimum access. Tighten the retention clip screw and fill the screw recess with red lacquer (Foxboro Part Number X0180GS or equivalent). The housing can still be rotated for optimum access.
10. Reinstall the electronics module per Steps 6 through 9 in the previous procedure.

Adding the Optional Display

To add the optional display, refer to Figure 40 and proceed as follows:

1. Turn off transmitter power source.
2. Remove the electronics compartment cover by rotating it counterclockwise. Screw in cover lock if applicable.
3. Plug the display into the receptacle at the top of the electronics assembly.
4. Ensure that the O-ring is seated in its groove in the display housing. Then insert the display into the electronics compartment by grasping the two tabs on the display and rotating it about 10° in a clockwise direction.
5. Install the new cover (with a window) onto the housing by rotating it clockwise to seat the O-ring into the housing and then continue to hand tighten until the cover contacts the housing metal-to-metal. If cover locks are present, lock the cover per the procedure described in “Cover Locks” on page 29.
6. Turn on transmitter power source.

Replacing the Sensor Assembly

To replace the sensor assembly, refer to Figures 41 and 42 and proceed as follows:

1. Remove the electronics module as described above.
2. Remove the housing as described above.
3. Remove the process covers from sensor by removing two hex head bolts.
4. Replace the gaskets in the process covers.
5. Install the process covers and housing on the new sensor. Torque cover bolts to 100 N·m (75 lb·ft) in several even increments. Torque values are 68 N·m (50 lb·ft) when 316 ss bolts are specified; 75 N·m (55 lb·ft) when B7M bolts are specified.
6. Reinstall electronics module.
7. Pressure test the sensor and process cover assembly by applying a hydrostatic pressure of 150% of the maximum static and overrange pressure rating to both sides of the process cover/sensor assembly simultaneously through the process connections. Hold

pressure for one minute. There should be no leakage of the test fluid through the gaskets. If leakage occurs, retighten the cover bolts per Step 5 (or replace the gaskets) and retest.

CAUTION

Perform hydrostatic test with a liquid and follow proper hydrostatic test procedures.

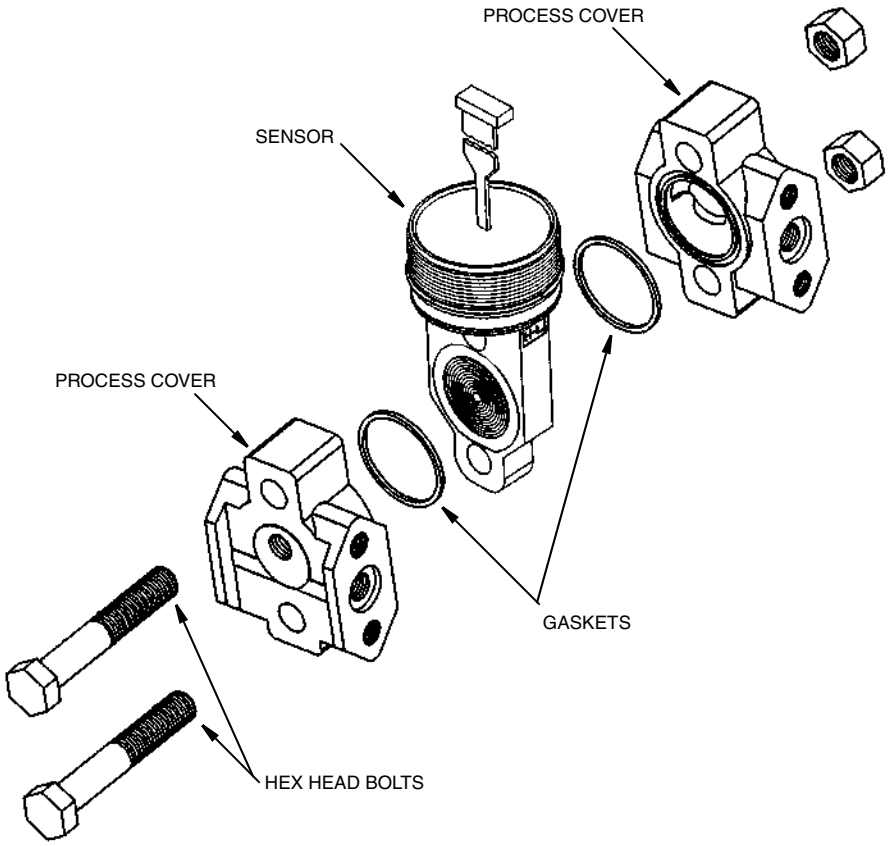

Figure 41. Replacing the Sensor Assembly

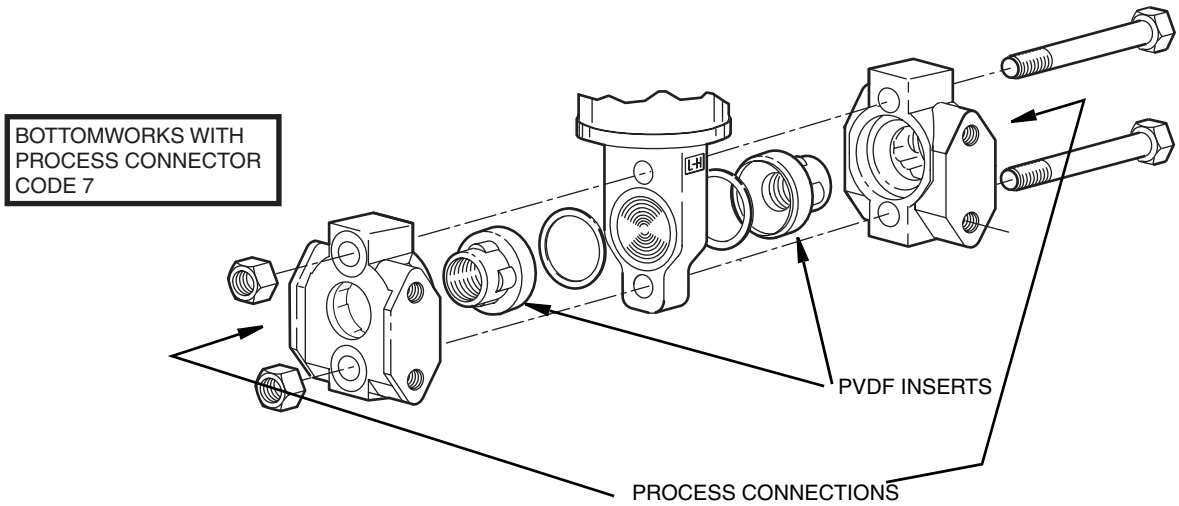

Figure 42. Replacing the Sensor Assembly (pvdf Inserts)

Rotating Process Covers for Venting

As received, your IASPT Transmitter provides sensor cavity draining without the need for side drain connections, regardless of whether the transmitter is mounted vertically or horizontally. Sensor cavity venting is provided by mounting the transmitter horizontally or with the optional vent screw (-V). However, if you did not specify this option, you can still achieve venting (instead of draining) with vertical mounting by rotating the process covers. See Figure 43.

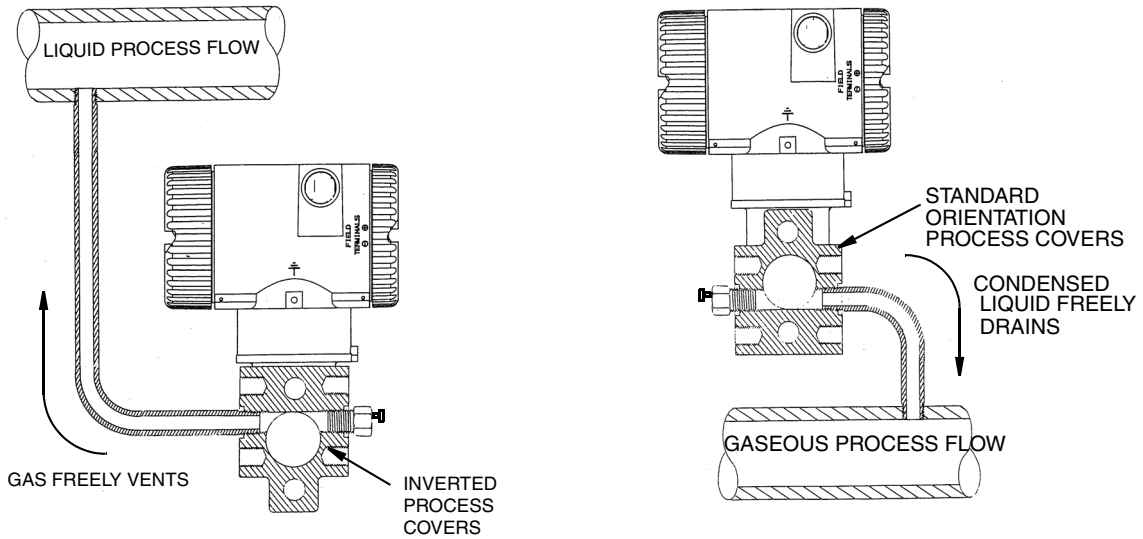

Figure 43. Sensor Cavity Venting and Draining

To rotate the process covers, refer to Figure 41 and proceed as follows:

1. Turn off the transmitter power source and remove the transmitter from the process.
2. Remove the process covers from sensor by removing two hex head bolts.

3. Replace gaskets in process covers.
4. Rotate the process covers so that the longer tab is at the bottom.
5. Reinstall process covers and bolts. Torque cover bolts to 100 N·m (75 lb·ft) in several even increments. Torque values are 68 N·m (50 lb·ft) when 316 ss bolts are specified; 75 N·m (55 lb·ft) when B7M bolts are specified.
6. Pressure test the sensor and process cover assembly by applying a hydrostatic pressure of 150% of the maximum static and overrange pressure (see "Standard Specifications" on page 5) to both sides of the process cover/sensor assembly simultaneously through the process connections. Hold pressure for one minute. There should be no leakage of the test fluid through the gaskets. If leakage occurs, retighten the cover bolts per Step 4 or replace the gaskets and retest.

! CAUTION

Perform hydrostatic test with a liquid and follow proper hydrostatic test procedures.

Index

C

Calibration 41
- Using a HART Communicator 46
- Using a PC20 46
- Using a PC50 Configurator 46
- Using the Local Display 46

Calibration Notes 41
Calibration Setup 43
Configuration 53
- Using a HART Communicator 54
- Using a PC20 Configurator 54
- Using a PC50 Configurator 54
- Using the Local Display 54

Cover Locks 29

D

Display, Positioning the 28

E

Error Messages
- Calibration 51
- Configuration 65
- Operation 40

H

Housing, Positioning the 28

I

Identification 3
Installation 15

M

Maintenance 67
Mounting 15

O

Operation Via Local Display 37

P
Parts Replacement 67
Piping, Installation of Flow Measurement 24

R
Reference Documents 1
Reranging 39

S
Seal Liquid, Filling the System with 27
Specifications
    Product Safety 10
    Standard 5

W
Wiring 29
Write Protect Jumper, Setting the 29

Z
Zero Adjustment Using External Zero Button 49

ISSUE DATES
DEC 2001
OCT 2003
APR 2004
FEB 2005
JUN 2005
FEB 2006
AUG 2006
OCT 2007
JUL 2008
MAY 2010

Vertical lines to the right of text or illustrations indicate areas changed at last issue date.

Invensys Operations Management
5601 Granite Parkway Suite 1000
Plano, TX 75024
United States of America
http://www.iom.invensys.com

Global Customer Support
Inside U.S.: 1-866-746-6477
Outside U.S.:1-508-549-2424 or contact your local Invensys representative.
Email: support@invensys.com
Website: http://support.ips.invensys.com

Invensys, Foxboro, and I/A Series are trademarks of Invensys plc, its subsidiaries, and affiliates.
All other brand names may be trademarks of their respective owners.

Copyright 2001-2010 Invensys Systems, Inc.
All rights reserved

MB 100 0510

Instruction

MI IAP10-T/IGP10-T
May 2010

I/A Series® Intelligent Pressure Transmitters

IAP10 Absolute Pressure and IGP10 Gauge Pressure with HART Communication

Installation, Operation, Calibration, Configuration, and Maintenance

VOGT POWER INTERNATIONAL	
Released, Work May Proceed	
Hugle, Kathy	Nov-21-2011

invensys

Foxboro®

VOGT POWER INTERNATIONAL
V17460-ICXE-524-00
08-Nov-2011

Contents

Figures ..... **v**

Tables ..... **vi**

1. Introduction **1**

General Description 1

Reference Documents 1

Transmitter Identification 2

Standard Specifications 5

Product Safety Specifications 11
- ATEX and IECEx Warnings 14
- ATEX Compliance Documents 14
- IECEx Compliance Documents 14

2. Installation **15**

Transmitter Mounting 15
- Sanitary Process Connection 16
- Pulp and Paper Process Connection 18
  - Sleeve Type Connector 18
  - Threaded Type Connector 19

Typical Transmitter Piping 20

Positioning the Housing 21

Positioning the Display 22

Setting the Write Protect Jumper 22

Cover Locks 23

Wiring 23
- Accessing Transmitter Field Terminals 23
- Wiring the Transmitter to a Control Loop 24
- Multidrop Communication 27
- Connecting the Transmitter to an I/A Series System 28

3. Operation Via Local Display **29**

Entering Numerical Values 30

Reranging 31

Viewing the Database 31

Viewing the Pressure Range 31

Testing the Display 31

Error Messages 32

4. Calibration **33**
General Calibration Notes 33
Calibration Setup 35
Setup of Electronic Equipment 36
Field Calibration Setup 36
Bench Calibration Setup 37
Calibration Using a PC20 37
Calibration Using a PC50 37
Calibration Using a HART Communicator 37
Calibration Using the Optional Local Display 37
Zero Adjustment Using External Zero Button 40
Error Messages 42

5. Configuration **43**
Configurable Parameters 43
Configuration Using a PC20 44
Configuration Using a PC50 44
Configuration Using a HART Communicator 44
Configuration Using the Optional Local Display 44
Character Lists 52
Error Messages 52

6. Maintenance **55**
Error Messages 55
Parts Replacement 55
Replacing the Terminal Block Assembly 55
Replacing the Electronics Module Assembly 56
Removing and Reinstalling a Housing Assembly 57
Adding the Optional Display 58
Replacing the Sensor Assembly 58

Index **59**

Figures

1 Transmitter Identification 3
2 Top Level Structure Diagram 4
3 Minimum Allowable Absolute Pressure vs. Process Temperature with Fluorinert Fill Fluid 7
4 IAP10 and IGP10 Transmitter Mounting 16
5 Mounting of Transmitter with Sanitary Tri-Clamp Type Connection 16
6 Mounting of Transmitter with Sanitary Mini Tank Spud Seal 17
7 Welding Procedure 18
8 Mounting of Transmitter with Sleeve Type Pulp and Paper Process Connection 19
9 Mounting of Transmitter with Threaded Type Pulp and Paper Process Connection 20
10 Typical Transmitter Piping 21
11 Hot Process Piping 21
12 Housing Screw or Clip Location 22
13 Cover Lock Location 23
14 Accessing Field Terminals 24
15 Identification of Field Terminals 24
16 Supply Voltage and Loop Load 25
17 Loop Wiring Transmitters 27
18 Wiring Several Transmitters to a Common Power Supply 27
19 Typical Multidrop Network 28
20 Local Display Module 29
21 Top Level Structure Diagram 30
22 Display Test Segment Patterns 32
23 4 to 20 mA Output Calibration Setup of Electronic Equipment 36
24 Transmitter Piping 36
25 Bench Calibration Setup 37
26 Calibration Structure Diagram 39
27 Calibration Structure Diagram (Continued) 40
28 Configuration Structure Diagram 46
29 Configuration Structure Diagram (Continued) 47
30 Configuration Structure Diagram (Continued) 48
31 Replacing the Electronics Module Assembly and Display 57

Tables

1 Reference Documents 1
2 Minimum Loop Load and Supply Voltage Requirements 9
3 Electrical Safety Specifications 12
4 Operation Error Messages 32
5 Calibration Menu 38
6 Calibration Error Messages 42
7 Configurable Parameters 43
8 Configuration Menu 45
9 Alphanumeric Character List 52
10 Numeric Character List 52
11 Configuration Error Messages 52

1. Introduction

General Description

The IAP10-T Intelligent Absolute Pressure and IGP10-T Intelligent Gauge Pressure Transmitters measure pressure by applying the pressure to a silicon strain gauge microsensor within the sensor assembly. This microsensor converts the pressure to a change in resistance, and the resistance change is converted to a 4 to 20 mA or digital signal proportional to the pressure. This measurement signal is transmitted to remote receivers over the same two wires that supply power to the transmitter electronics. These wires also carry two-way data signals between the transmitter and remote communication devices.

The transmitter allows direct analog connection to common receivers while still providing full Intelligent Transmitter Digital Communications using a HART Communicator.

The transmitter can be supplied with direct connected pressure seals or with remote pressure seals.

For more detailed information on the principle of operation of the transmitter, refer to document TI 037-096, available from Invensys.

Reference Documents

Table 1. Reference Documents

Document	Description
Dimensional Prints	
DP 020-217	Dimensional Print – IAP10 and IGP10 Pressure Transmitters with Pulp and Paper Process Connections
DP 020-218	Dimensional Print – IAP10 and IGP10 Pressure Transmitters with Sanitary Tri-Clamp Process Connections
DP 020-219	Dimensional Print – IAP10 and IGP10 Pressure Transmitters with Sanitary Mini Tank Spud Process Connections
DP 020-342	Dimensional Print – PSFLT Pressure Seals
DP 020-343	Dimensional Print – PSFPS and PSFES Pressure Seals
DP 020-344	Dimensional Print – IGP10 Gauge Pressure Transmitters (High Pressure)
DP 020-345	Dimensional Print – PSFAR Pressure Seals
DP 020-346	Dimensional Print – PSFAD Pressure Seals
DP 020-347	Dimensional Print – PSTAR Pressure Seals
DP 020-348	Dimensional Print – PSTAD Pressure Seals
DP 020-349	Dimensional Print – PSISR Pressure Seals
DP 020-350	Dimensional Print – PSISD Pressure Seals
DP 020-351	Dimensional Print – PSSCR Pressure Seals
DP 020-353	Dimensional Print – PSSCT Pressure Seals

Table 1. Reference Documents (Continued)

Document	Description
DP 020-354	Dimensional Print – PSSSR Pressure Seals
DP 020-355	Dimensional Print – PSSST Pressure Seals
DP 020-447	Dimensional Print – IAP10 and IAP20 Absolute Pressure and IGP10, IGP20, IGP25, and IGP50 Gauge Pressure Transmitters
Parts Lists	
PL 009-006	Parts List – IAP10 Absolute and IGP10 Gauge Pressure Transmitters
PL 009-010	Parts List – IGP10 High Gauge Pressure Transmitter
Instructions	
MI 020-366	Instruction – I/A Series Intelligent Pressure Transmitters Operation, Configuration, and Calibration Using a HART Communicator
MI 020-369	Instruction – Pressure Seals
MI 020-427	Instruction – Intrinsic Safety Connection Diagrams and Nonincendive Circuits
MI 020-495	Instruction – PC20 Intelligent Transmitter Configurator
MI 020-501	Instruction – PC50 Intelligent Field Device Tool (Installation and Parts List)
MI 020-520	Instruction – PC50 Intelligent Field Device Tool with Advanced DTM Library
MI 022-138	Instruction – Bypass Manifolds - Installation and Maintenance
Technical Information	
TI 37-75b	Technical Information – Transmitter Material Selection Guide
TI 037-097	Technical Information – Process Sealing of I/A Series Pressure Transmitters for use in Class 1, Zone 0, 1, and 2 Hazardous Locations

Transmitter Identification

See Figure 1 for transmitter data plate contents. For a complete explanation of the Model Number code, see the parts list. The firmware version is identified on the top line of the display when **VIEW DB** (View Database) is selected in the top level structure (see Figure 2).

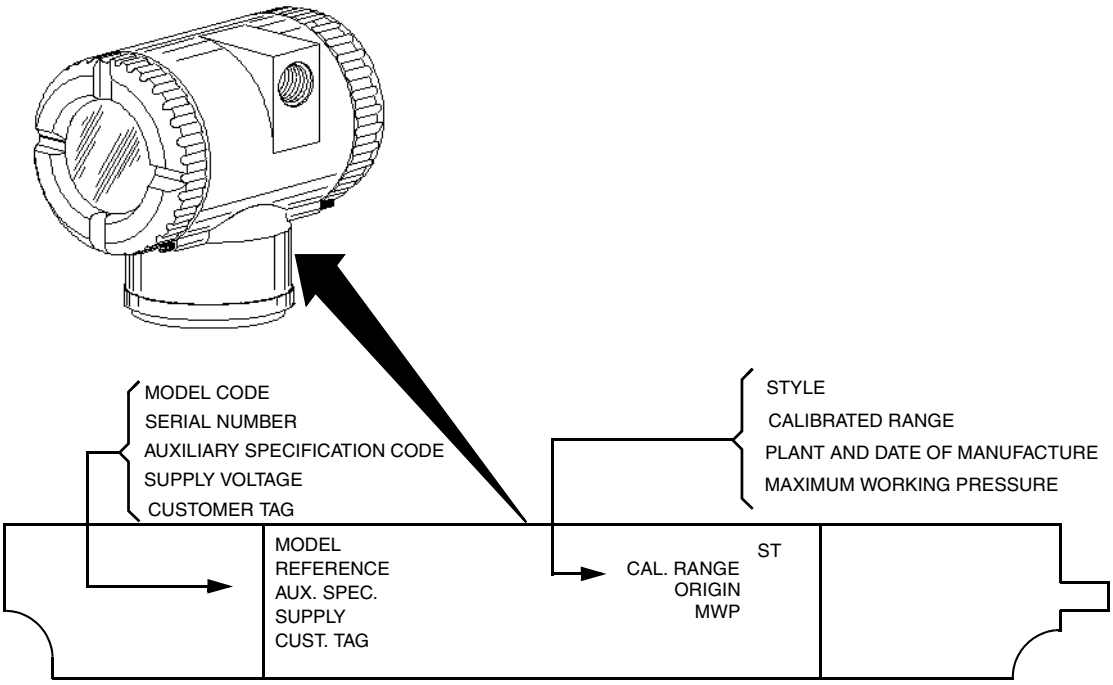

Figure 1. Transmitter Identification

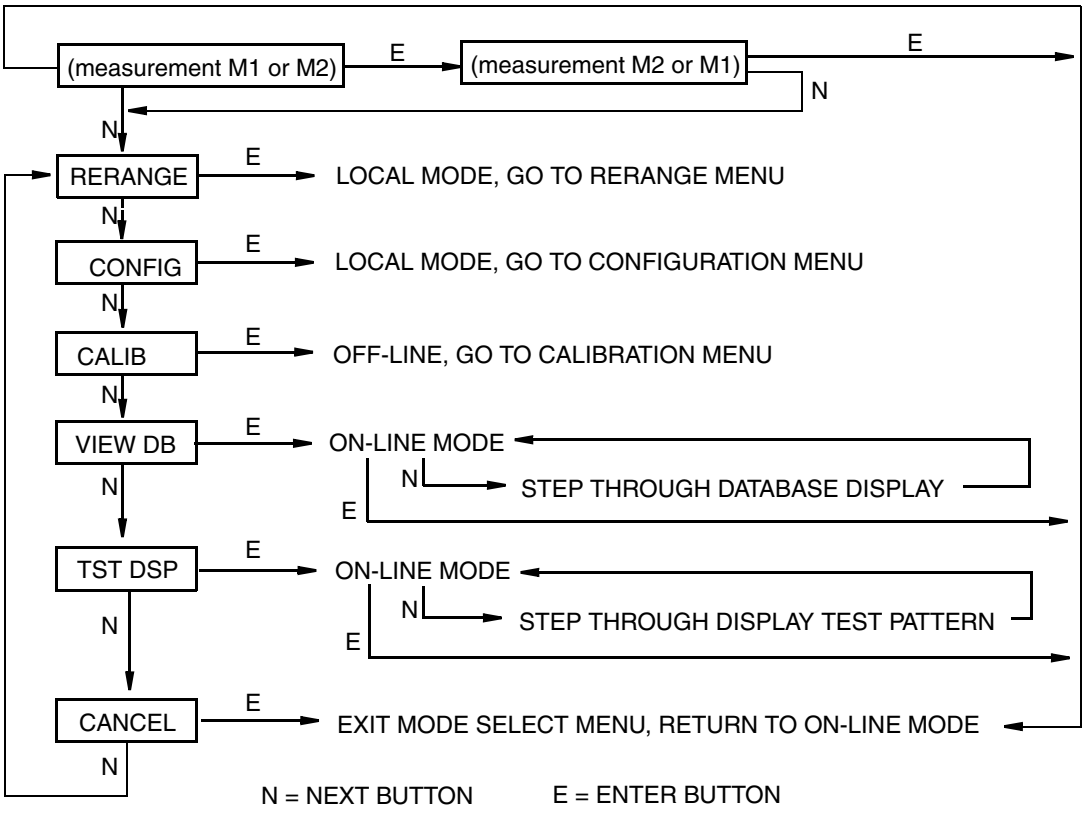

Figure 2. Top Level Structure Diagram

Standard Specifications

Operative Limits

Influence	Operative Limits
Sensor Body Temperature[a] Silicone Fill Fluid Fluorinert Fill Fluid Neobee Fill Fluid pvdf Inserts	 -46 and +121°C (-50 and +250°F) -29 and +121°C (-20 and +250°F) -18 and +121°C (0 and 250°F) -7 and +82°C (20 and 180°F)
Electronics Temperature With LCD Display	-40 and +85°C (-40 and +185°F)[b] -40 and +85°C (-40 and +185°F)[c]
Relative Humidity	0 and 100%
Supply Voltage	11.5 and 42 V dc
Output Load[d]	0 and 1450 ohms
Mounting Position	No Limit
Vibration	6.3 mm (0.25 in) double amplitude from 5 to 15 Hz with aluminum housing and from 5 to 9 Hz with 316 ss housing. 0 to 30 m/s (0 to 3 "g") from 15 to 500 Hz with aluminum housing and 0 to 10 m/s (0 to 1 "g") from 9 to 500 Hz with 316 ss housing.

(a) Refer to MI 020-369 for temperature limits with pressure seals.

(b) -40 and +75°C (-40 and +167°F) for transmitters with ATEX flameproof classification.

(c) Display updates are slowed and readability decreased at temperatures below -20°C (-4°F).

(d) 250 Ω minimum load is required for communication with a HART Communicator.

Span and Range Limits

Span Limit Code	Span Limits[a]	Range Limits[a]
C	7 and 210 kPa 28 and 840 inH_2O	0 and 210 kPa 0 and 840 inH_2O
D	0.07 and 2.1 MPa 10 and 300 psi 23 and 690 ftH_2O	0 and 2.1 MPa 0 and 300 psi 0 and 690 ftH_2O
E	0.7 and 21 MPa 100 and 3000 psi	0 and 21 MPa 0 and 3000 psi
F[b,c]	14 and 42 MPa 2000 and 6000 psi	0 and 42 MPa 0 and 6000 psi
G[b,c]	35 and 105 MPa 5000 and 15,000 psi	0 and 105 MPa 0 and 15,000 psi
H[b,c]	70 and 210 MPa 10,000 and 30,000 psi	0 and 210 MPa 0 and 30,000 psi
K[b,c]	17 and 52 MPa 2500 and 7500 psi	0 and 52 MPa 0 and 7500 psi

Span Limit Code	Span Limits[a]	Range Limits[a]

(a)Values listed are in absolute or gauge pressure units, as applicable.
(b)Not available with pressure seals.
(c)Applicable to IGP10 only

Maximum Overrange Pressure and Proof Pressure

Span Limit Code	Maximum Overrange Pressure[a]	Proof Pressure[a][c]
C	0.31 MPa (45 psi)	827 kPa (120 psi)
D	3.1 MPa (450 psi)	8.27 MPa (1200 psi)
E	31 MPa (4500 psi)	79.3 MPa (11,500 psi)
F[b]	58 MPa (8400 psi)	152 MPa (22,000 psi)
G[b]	137 MPa (19,500 psi)	310 MPa (45,000 psi)
H[b]	231 MPa (33,000 psi)	567 MPa (81,000 psi)
K[b]	79 MPa (11,250 psi)	155 MPa (22,500 psi)

(a)Values listed are in absolute or gauge pressure units, as applicable.
(b)Applicable to IGP10 only.
(c)Meets ANSI/ISA Standard S82.03-1988

CAUTION

1. Exceeding the overrange pressure limit for the transmitter can cause damage to the transmitter, degrading its performance.
2. The transmitter may be nonfunctional after application of the proof pressure.

Suppressed Zero

For applications requiring a suppressed zero, the maximum span and the upper and lower range limits of the transmitter can not be exceeded.

Sensor Fill Fluid

Silicone Oil (DC 200) or Fluorinert (FC-43)
Neobee M-20 (for transmitters with sanitary process connection)
Not applicable with IGP10 Span Limit Codes G and H.

Minimum Allowable Absolute Pressure vs. Process Temperature

IGP10: Not Applicable.
IAP10: With Silicone Fill Fluid: up to 120 °C (250 °F) at full vacuum.
With Fluorinert Fill Fluid: Refer to Figure 3.

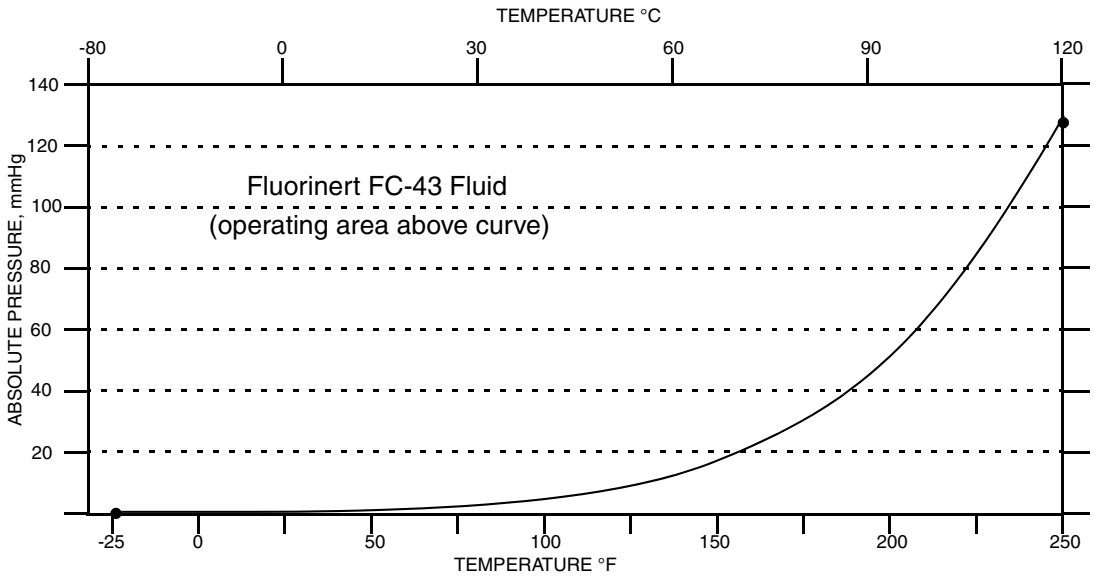

Figure 3. Minimum Allowable Absolute Pressure vs. Process Temperature with Fluorinert Fill Fluid

Mounting Position

The transmitter can be mounted in any orientation. It can be directly mounted to the process with either the direct connected or pipe mounted designs. The housing can be rotated up to one full turn to any desired position for access to adjustments, display, or conduit connections. See "Positioning the Housing" on page 21. The display (if present) can also be rotated in the housing to any of four different positions at 90° increments. See "Positioning the Display" on page 22.

NOTE

Position effect zero shift for all calibrated spans can be eliminated by readjusting zero output after installation.

Approximate Mass

IAP10, IGP10:	1.5 kg (3.3 lb)
With Optional 316 ss Housing:	Add 1.1 kg (2.4 lb)
With Pressure Seals:	Varies with seal used

Process Connections

IAP10 and IGP10 transmitters can be directly connected to the process using its 1/2 NPT external thread or optional G 1/2 B connection. If the optional mounting bracket is used, the transmitter can be connected to the process via the 1/2 NPT external thread, 1/4 NPT internal thread, or optional G 1/2 B connection.

Using the optional mounting bracket, IGP10 transmitters with Span Limit Code G can connect to the process via the 1/4 NPT internal thread, G 1/2 B external thread, or Autoclave F-250-C with 9/16-18 internal gland thread.

Using the optional mounting bracket, IGP10 transmitters with Span Limit Code H are connected using the Autoclave F-250-C with 9/16-18 internal gland thread.

IAP10 and IGP10 Transmitters with a sanitary process connection connect to the process via a Tri-Clamp process connector, a threaded connection, or a mini tank spud.

IAP10 and IGP10 Transmitters with a pulp and paper process connection connect to the process via a threaded or sleeve type connection.

Process Wetted Materials

IAP10 or IGP10	
Diaphragm:	Co-Ni-Cr, 316L ss, or Hastelloy C
Process Connectors:	316L ss or Hastelloy C
IGP10 with Span Limit Code G:	15-5 ss or Inconel X-750
IGP10 with Span Limit Code H:	13-8 Mo ss
Pressure Seals:	Refer to MI 020-369
Sanitary Process Connections:	316L ss, Hastelloy C
Pulp and Paper Process Connections	316L ss, Hastelloy C

Reference Pressure Side (Low Pressure Side) Materials

IGP10: Silicon, Pyrex, RTV, 316L ss, and Ceramic
Not applicable with IGP10 Span Limit Codes G and H

Process Pressure and Temperature Limits for Pressure Seals

Refer to MI 020-369

Electrical Connections

Field wires enter through 1/2 NPT, PG 13.5, or M20 threaded entrances on either side of the electronics housing. Leads terminate under screw terminals and washers on the terminal block in the field terminal compartment. To maintain RFI/EMI, environmental, and explosionproof ratings, unused conduit connection must be plugged with metal plug (provided), inserted to five full threads for 1/2 NPT connections; seven full threads for M20 and PG 13.5 connections

Field Wiring Reversal

Accidental reversal of field wiring will not damage the transmitter, provided the current is limited to 1 A or less by active current limiting or loop resistance. Sustained currents of 1 A will not damage the electronics module or sensor but could damage the terminal block assembly and external instruments in the loop.

Adjustable Damping

The transmitter response time is normally 1.0 second or the electronically adjustable setting of 0.00 (none), 0.25, 0.50, 1, 2, 4, 8, 16, or 32 seconds, whichever is greater, for a 90% recovery from an 80% input step as defined in ANSI/ISA S51.1.

Output Signal

4 to 20 mA dc linear.

Zero and Span Adjustments

Zero and span are adjustable from the HART Communicator. They are also adjustable at the transmitter using the display. An optional external self-contained moisture sealed pushbutton assembly allows local resetting of zero without removing the housing cover.

Power-up Time

Less than 2.0 seconds for output to reach the first valid measurement, then at the electronic damping rate to reach the final measured variable value.

Supply Voltage

Power supply must be capable of providing 22 mA when the transmitter is configured for 4 to 20 mA output. Ripple of up to 2 V pp (50/60/100/120 Hz) is tolerable, but instantaneous voltage must remain within specified range.

The supply voltage and loop load must be within specified limits. This is explained in detail in "Wiring" on page 23. A summary of the minimum requirements is listed in the following table.

Table 2. Minimum Loop Load and Supply Voltage Requirements

	HART Communication	No HART Communication
Minimum Resistance	250 Ω	0
Minimum Supply Voltage	17 V	11.5 V

Electrical Ground Connections

The transmitter is equipped with an internal ground connection within the field wiring compartment and an external ground connection at the base of the electronics housing. To minimize galvanic corrosion, place the wire lead or contact between the captive washer and loose washer on the external ground screw. If shielded cable is used, earth (ground) the shield at the field enclosure **only**. Do **not** ground the shield at the transmitter.

HART Communicator Connection Points

The HART Communicator can be connected in the loop as shown in "Wiring" on page 23. It can also be connected directly to the transmitter at the two upper banana plug receptacles.

Test Points

The two lower banana plug receptacles (designated **CAL**) can be used to check transmitter output when configured for 4 to 20 mA. Measurements should be 100-500 mV dc for 0-100% transmitter output.

Remote Communications

The transmitter communicates bidirectionally over the 2-wire field wiring to a HART Communicator. The information that can be continuously displayed is:

- Process Measurement (expressed in one or two types of units)
- Transmitter Temperature (sensor and electronics)
- mA Output (equivalent)

The information that can be remotely displayed and reconfigured includes:

- Output in Pressure Units. Percent Output on local display is also supported.
- Zero and Span, including reranging
- Zero Elevation or Suppression
- Linear Output
- Pressure Units (from list provided)
- Temperature Sensor Failure Strategy
- Electronic Damping
- Poll Address (Multidrop mode)
- External Zero (Enable or Disable)
- Failsafe Direction
- Tag, Description, and Message
- Date of Last Calibration

Communications Format

Communication is based upon the FSK (Frequency Shift Keying) technique. The frequencies are superimposed on the transmitter power/signal leads.

4 to 20 mA Output

The transmitter sends its pressure measurement to the loop as a continuous 4 to 20 mA dc signal. It also communicates digitally with the HART Communicator at distances up to 3000 m (10 000 ft). Communication between the remote configurator and the transmitter does not disturb the 4 to 20 mA output signal. Other specifications are:

Data Transmission Rate:	1200 Baud
4 - 20 mA Update Rate:	30 times/second
Output when Fail Low:	3.60 mA
Output when Fail High:	21.00 mA
Output when Underrange	3.80 mA
Output when Overrange	20.50 mA
Output when Offline:	User configurable between 4 and 20 mA

Product Safety Specifications

DANGER

To prevent possible explosions and to maintain flameproof, explosionproof, and dust-ignitionproof protection, observe applicable wiring practices. Plug unused conduit opening with the provided metal pipe plug. Both plug and conduit must engage a minimum of five full threads for 1/2 NPT connections; seven full threads for M20 and PG 13.5 connections.

WARNING

To maintain IEC IP66/IP68 and NEMA Type 4X protection, the unused conduit opening must be plugged with the metal plug provided. Use a suitable thread sealant on both conduit connections. In addition, the threaded housing covers must be installed. Turn covers to seat the O-ring into the housing and then continue to hand tighten until the cover contacts the housing metal-to-metal.

NOTE

1. These transmitters have been designed to meet the electrical safety description listed in Table 3. For detailed information or status of testing laboratory approvals/certifications, contact Invensys.
2. Wiring restrictions required to maintain electrical certification of the transmitter are provided in these instructions. See “Wiring” on page 23.

Table 3. Electrical Safety Specifications

Agency Certification, Types of Protection, and Area Classification	Application Conditions	Electrical Safety Design Code
ATEX flameproof: II 2 GD EEx d IIC, Zone 1.	SIRA 04ATEX1349 Temperature Class T6, T85°C, Ta = -40 to +75°C	D
ATEX intrinsically safe: II 1 GD EEx ia IIC, Zone 0.	SIRA 06ATEX2055X Temperature Class T4,Ta = -40 to +80°C	E
ATEX protection n: II 3 GD EEx nL IIC, Zone 2.	SIRA 06ATEX4056X Temperature Class T4, Ta = -40 to +80°C	N
ATEX multiple certifications, ia & ib and n. Refer to Codes E and N for details.	Applies to Codes E and N but not to Code D.[(a)]	M
ATEX multiple certifications, ia & ib, d, and n. Refer to Codes D, E and N for details.	Applies to Codes D, E, and N.[(a)]	P
CSA intrinsically safe for Class I, Division 1, Groups A, B, C, and D; Class II, Division 1, Groups E, F, and G; Class III, Division 1. Also, Zone certified intrinsically safe Ex ia IIC and energy limited Ex nA II.	Connect per MI 020-427. Temperature Class T4A at 40°C (104°F) and T3C at 85°C (185°F) maximum ambient. Temperature Class T4 at 40°C (104°F), and T3 at 85°C (185°F) max. ambient.	C
CSA explosionproof for Class I, Division 1, Groups B, C, and D; dust-ignitionproof for Class II, Division 1, Groups E, F, and G; Class III, Division 1.	Maximum Ambient Temperature 85°C (185°F).	
CSA for Class I, Division 2, Groups A, B, C, and D; Class II, Division 2, Groups F and G; Class III, Division 2.	Temperature Class T4A at 40°C (104°F) and T3C at 85°C (185°F) maximum ambient.	
CSA field device zone certified flameproof Ex d IIC. Also, all certifications of Code C above.	Maximum Ambient Temperature 85°C (185°F).	B

Table 3. Electrical Safety Specifications (Continued)

Agency Certification, Types of Protection, and Area Classification	Application Conditions	Electrical Safety Design Code
CSA intrinsically safe for Class I, Division 1, Groups A, B, C, and D; Class II, Division 1, Groups E, F, and G; Class III, Division 1. Also, Zone certified intrinsically safe Ex ia IIC and energy limited Ex nA II.	Connect per MI 020-427. Temperature Class T4A at 40°C (104°F), and T3C at 85°C (185°F) maximum ambient. Temperature Class T4 at 40°C (104°F), and T3 at 85°C (185°F) max. ambient.	L (IGP10 only)
CSA for Class I, Division 2, Groups A, B, C, and D; Class II, Division 2, Groups F and G; Class III, Division 2.	Temperature Class T4A at 40°C (104°F) and T3C at 85°C (185°F) maximum ambient.	
FM intrinsically safe for Class I, Division 1, Groups A, B, C, and D; Class II, Division 1, Groups E, F, and G; Class III, Division 1. Also, Zone certified intrinsically safe AEx ia IIC.	Connect per MI 020-427. Temperature Class T4A at 40°C (104°F) and T4 at 85°C (185°F) maximum ambient. Temperature Class T4 at 85°C (185°F) maximum ambient.	F
FM explosionproof for Class I, Division 1, Groups B, C, and D; dust-ignitionproof for Class II, Division 1, Groups E, F, and G; Class III, Division 1.	Temperature Class T6 at 80°C (176°F) and T5 at 85°C (185°F) maximum ambient.	
FM nonincendive for Class I, Division 2, Groups A, B, C, and D; Class II, Division 2, Groups F and G; Class III, Division 2.	Temperature Class T4A at 40°C (104°F) and T4 at 85°C (185°F) maximum ambient.	
FM field device zone certified flameproof AEx d IIC. Also, all certifications of Code F above.	Temperature Class T6 at 75°C (167°F) maximum ambient.	G
FM intrinsically safe for Class I, Division 1, Groups A, B, C, and D; Class II, Division 1, Groups E, F, and G; Class III, Division 1. Also, Zone certified intrinsically safe AEx ia IIC.	Connect per MI 020-427. Temperature Class T4A at 40°C (104°F), and T4 at 85°C (185°F) maximum ambient. Temperature Class T4 at 85°C (185°F) maximum ambient.	R (IGP10 only)
FM nonincendive for Class I, Division 2, Groups A, B, C, and D; Class II, Division 2, Groups F and G; Class III, Division 2.	Temperature Class T4A at 40°C (104°F) and T4 at 85°C (185°F) maximum ambient.	

Table 3. Electrical Safety Specifications (Continued)

Agency Certification, Types of Protection, and Area Classification	Application Conditions	Electrical Safety Design Code
IECEx intrinsically safe: Ex ia IIC.	IECEx SIR 06.0010X Temperature Class T4, Ta = -40 to +80°C.	T
IECEx protection n: Ex nL IIC	IECEx SIR 06.0011X Temperature Class T4, Ta = -40 to +80°C.	U
IECEx flameproof: Ex d IIC	IECEx SIR 05.0003X Temperature Class T6, Ta = -40 to +75°C	V

(a) User must permanently mark (check off in rectangular block on data plate) one type of protection only (ia and ib, d, or n). This mark cannot be changed once it is applied.

ATEX and IECEx Warnings

Do not open while circuits are alive.

ATEX Compliance Documents

EN 50014: 1997 (inc amendments A1 and A2)
EN 50018: 2000 (inc amendment A1)
EN 50020: 2002
EN 50284: 1999
EN 50281-1-1: 1998
EN 60079-15: 2004

IECEx Compliance Documents

IEC 60079-0 (Edition 3.1): 2000
IEC 60079-1 (Edition 5): 2003
IEC 60079-11 (Edition 4): 1999
IEC 60079-15 (Edition 2): 2001

2. Installation

CAUTION

To avoid damage to the transmitter sensor, do not use any impact devices, such as an impact wrench or stamping device, on the transmitter.

NOTE

1. The transmitter should be mounted so that any moisture condensing or draining into the field wiring compartment can exit through one of the two threaded conduit connections.
2. Use a suitable thread sealant on all connections.

Transmitter Mounting

The IAP10 and IGP10 transmitters with the 1/2 NPT external thread can be directly connected to the process or mounted to a vertical or horizontal pipe or a surface using the optional mounting set. See Figure 4.

For dimensional information, refer to DP 020-447. For IGP10 transmitters with Span Limit Code G, H, or K, refer to DP 020-344.

NOTE

1. Do **not** directly mount the IAP10 and IGP10 transmitters to the process using the 1/4 NPT internal thread. This thread should only be used to connect to the process when the transmitter is mounted with an optional (-M1 through -M6) mounting set.
2. Do not directly mount IGP10 transmitters with Span Limit Code G or H. Use the optional mounting set as shown in Figure 4.
3. Do not mount IAP10 or IGP10 transmitters using the conduit connection and optional mounting set when vibration conditions exceed 20 m/s^2 (2 “g”).
4. 4. If the transmitter is not installed in the vertical position, readjust the zero output to eliminate the position zero effect. Be aware that an absolute pressure transmitter cannot be zeroed by venting the transmitter to atmosphere.

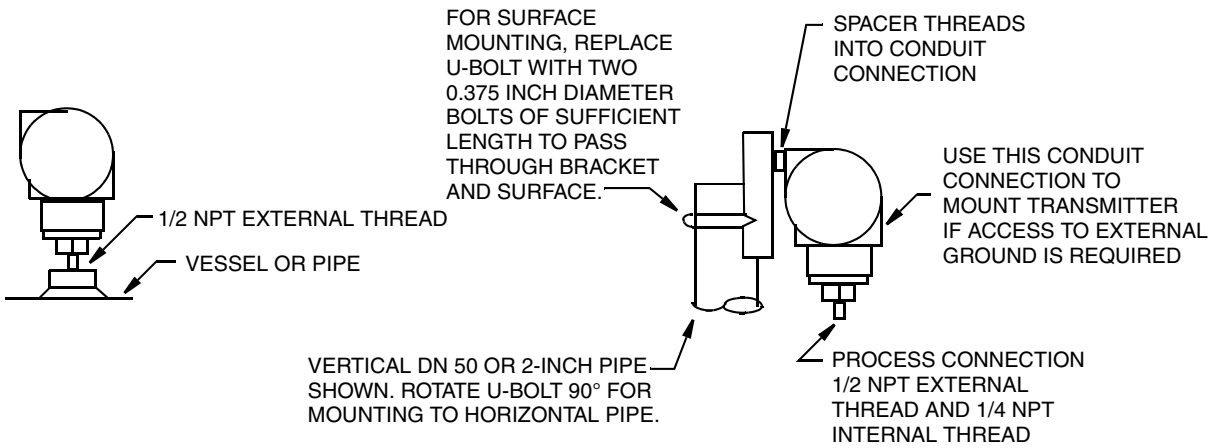

Figure 4. IAP10 and IGP10 Transmitter Mounting

Sanitary Process Connection

The IAP10 and IGP10 transmitters with a sanitary process connector employ a Tri-Clamp type connection or mini tank spud seal. Install the transmitter as shown in Figures 5 and 6. For dimensional information, see the following documents:

Tri-Clamp Type Connector: DP 020-218

Mini Tank Spud Connector: DP 020-219

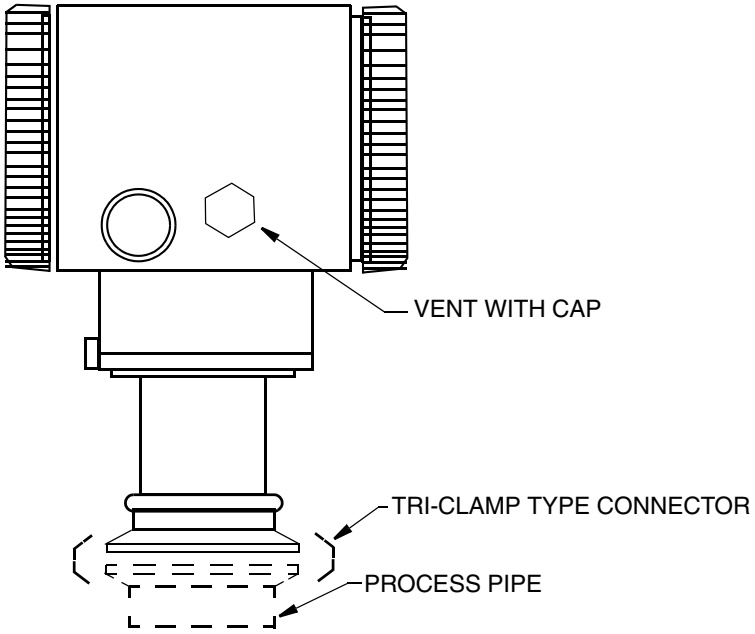

Figure 5. Mounting of Transmitter with Sanitary Tri-Clamp Type Connection

NOTE

1. If the transmitter is to be mounted horizontally (side of a tank), the housing should be oriented so that the vent is self draining. **Do not mount the vent facing up.**

2. If the vent is to face down, it is recommended that the protective cap be removed.
3. If the vent clogs, replace it with Foxboro Part Number D0186DQ (W.L.Gore part number PMF100318). It is recommended that spare vents be stocked and replaced at a predetermined interval as part of preventive maintenance. When installing a new vent, the applied torque should be 0.6 to 0.8 N•m (5 to 7 in•lb).
4. If the transmitter is subject to routine wash down such as in typical sanitary applications and the vent is orientated so that it is self draining, the vent will stay clear and longer intervals between preventive maintenance may be realized.
5. If the vent becomes clogged, the resulting pressure measurement error may be as much as 1.5 inH2O per degree C change in temperature. This error is positive with decreasing temperature and negative with increasing temperature.

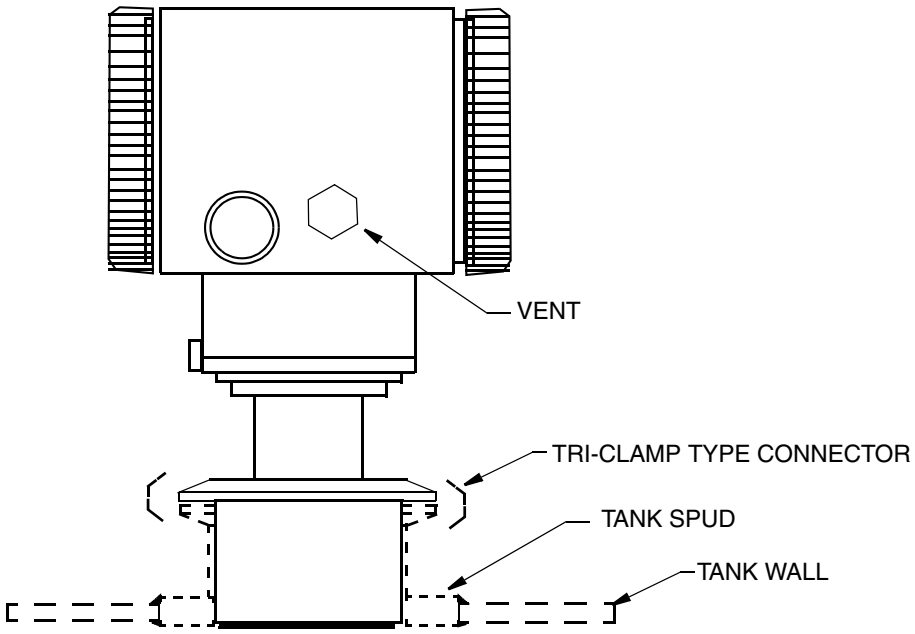

Figure 6. Mounting of Transmitter with Sanitary Mini Tank Spud Seal

The tank spud must be welded into a hole cut in the tank as follows:

1. Cut a hole into the process vessel.to accept the spud. The spud should fit snugly and uniformly. The nominal diameter of the spud is:3.73 inch (94.7 mm). To assure that the seal is always covered by process fluid, the top of the hole should be below the minimum measurement level.
2. Position the spud mounting ring so that it aligns as close as possible with the inside wall of the tank and that the weep hole is at the bottom.
3. Tack weld the spud mounting ring to the outside of the tank in four places.
4. Weld the spud mounting ring to the inner surface of the tank per the following notes.

NOTE

1. 1. Spud is 316 stainless steel. Use compatible welding rod. Do not distort spud mounting ring by using excessive heat.

2. 2. Weld the spud mounting ring in sections as indicated in Figure 7.
3. 3. After each section is welded, cool right away with water until the temperature is less than 700°F (370°C) before welding the next section.

---

5. Grind the weld smooth so that the surface is free from irregularities where dirt can lodge.
6. Outer surface can be welded if desired after inner weld is completed.

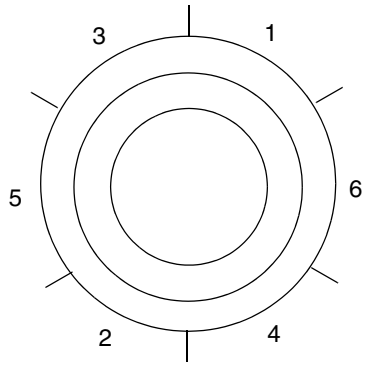

Figure 7. Welding Procedure

Pulp and Paper Process Connection

The IAP10 and IGP10 transmitters with a pulp and paper process connector are available in two designs - sleeve type and threaded type. Install the transmitter as explained below. For dimensional information, see DP 020-217.

Sleeve Type Connector

1. Cut a hole into the process vessel.to accept the weld spud. The spud should fit snugly and uniformly. The nominal diameter of the spud is:
   For nominal 1 inch connector: 1.32 inch (33.4 mm)
   For Nominal 1 1/2 inch connector: 1.90 inch (48.3 mm)
2. Position the sleeve into the hole so that it aligns as close as possible with the inside wall of the vessel
3. Tack weld using the welding sequence shown in Figure 7. Cool each section with water until the temperature is below 700°F (370°C) before proceeding to the next section.
4. Weld the circumference of the sleeve using compatible stainless steel welding rod.

— NOTE

The welder should meet the requirements of ANSI B31.3, ASME Section IX or other codes, if applicable.

---

5. Lubricate the O-ring with appropriate lubricant and install it into the sleeve, ensuring that it is properly seated.

— NOTE

If the gasket is not properly seated, a process leak may occur.

6. Insert the transmitter sensor into the sleeve and hold it in place with cap screws.

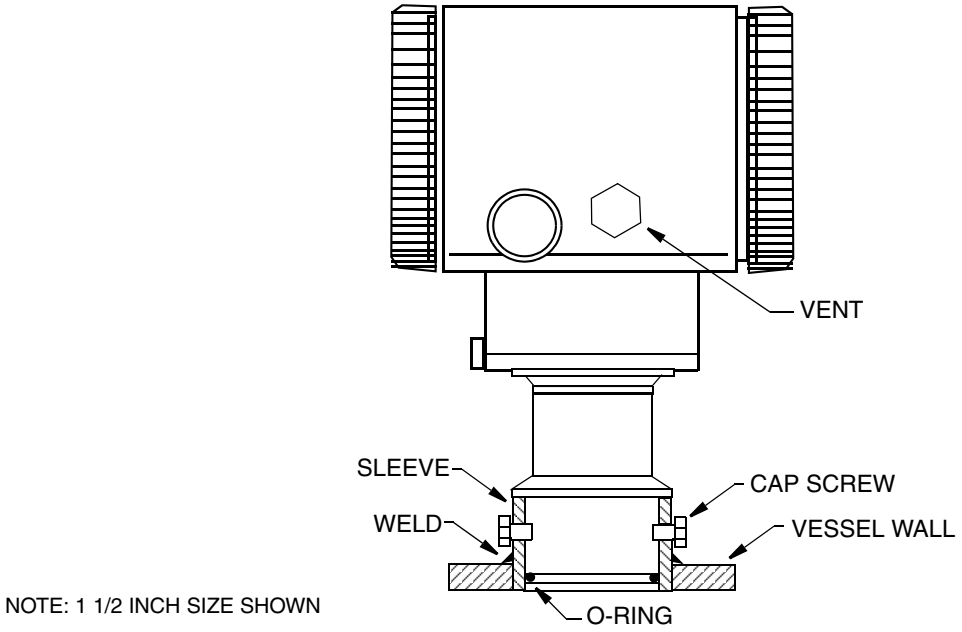

Figure 8. Mounting of Transmitter with Sleeve Type Pulp and Paper Process Connection

Threaded Type Connector

1. Cut a hole into the process vessel.to accept the weld spud. The spud should fit snugly and uniformly. The nominal diameter of the spud is:
   For nominal 1 inch connector: 1.50 inch (38.1 mm)
   For nominal 1 1/2 inch connector: 2.38 inch (60.3 mm)
   For nominal 1 1/2 inch connector for Ametek spud: 1.99 inch (50.5 mm)
   Position the connector into the hole so that it aligns as close as possible with the inside wall of the vessel
2. Tack weld using the welding sequence shown in Figure 7. Cool each section with water until the temperature is below 700°F (370°C) before proceeding to the next section.

— NOTE

Invensys recommends using a heat sink during this operation.
1 inch size: Part Number N1214YS
1 1/2 inch size: Part Number N1214YR

3. Weld the circumference of the connector using compatible stainless steel welding rod.

— NOTE

The welder should meet the requirements of ANSI B31.3, ASME Section IX or other codes, if applicable.

4. After the connector has cooled, remove the heat sink.
5. Lubricate the gasket with appropriate lubricant and install it into the connector, ensuring that it is properly seated.

NOTE

If the gasket is not properly seated, a process leak may occur.

6. Thread the sensor into the connector hand tight. Then tighten approximately 1/8 turn more.

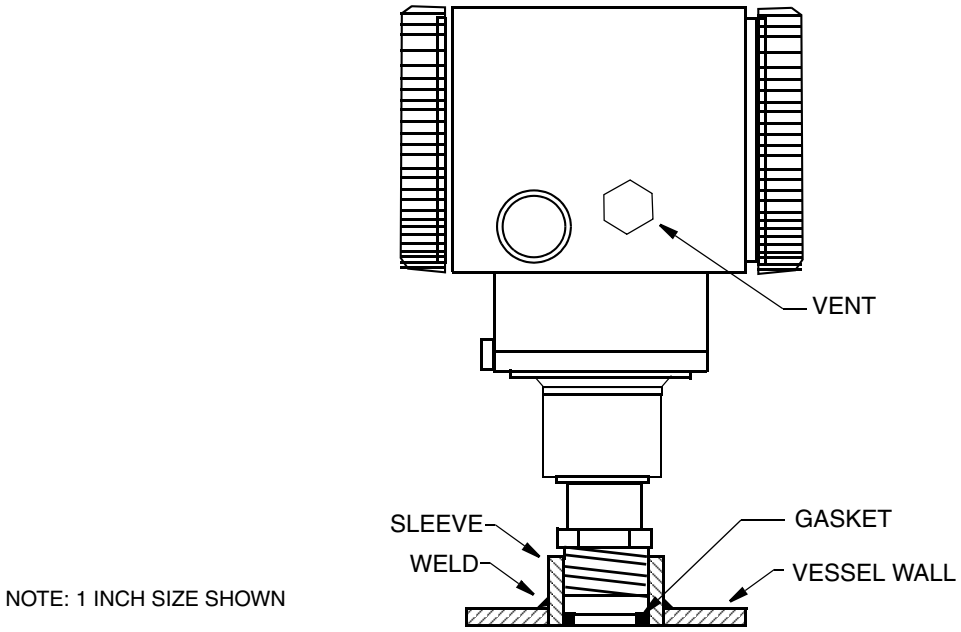

Figure 9. Mounting of Transmitter with Threaded Type Pulp and Paper Process Connection

Typical Transmitter Piping

Figure 10 shows a typical piping application. Calibration supply pressure can be applied via a calibration screw. The lower conduit port can be used as a drain for moisture buildup in terminal compartment.

NOTE

1. Invensys recommends the use of snubbers in installations prone to high levels of fluid pulsations.
2. IAP10 and IGP10 Transmitters mounted directly to process piping or a pressure vessel, could require the use of a shutoff valve (shown) to comply with the requirements of ASME Power Piping Code B31.1 and Chemical and Petroleum Piping Code B31.3.

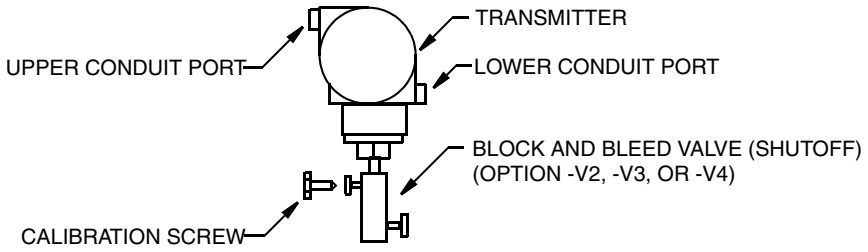

NOTE: Block and Bleed Valve Maximum Pressure
40 MPa (6000 psi at 38°C) (100°F)
25 MPa (4000 psi at 250°C) (400°F)
Calibration Screw Maximum Pressure
0.7 MPa (100 psi with Poly-Flo Fitting) (F0101ES)

Figure 10. Typical Transmitter Piping

For hot process applications above the operative limits of your transmitter [121°C (250°F) for silicone fill fluid or 82°C (180°F) for fluorinert fill fluid], such as steam, additional piping is required to protect the transmitter from the hot process. See Figure 11. The piping is filled with water or process fluid. Mount the transmitter below the pressure connection at the pipe. Although the transmitter is shown mounted vertically, you can also mount it horizontally unless sediment is present. The calibration tee is not required if a calibration screw is used for field calibrations.

If trapped vapor pockets cannot be tolerated in a liquid service and a horizontal process connection is used, install a pipe elbow and vertically position the transmitter with the housing **below** the process connection.

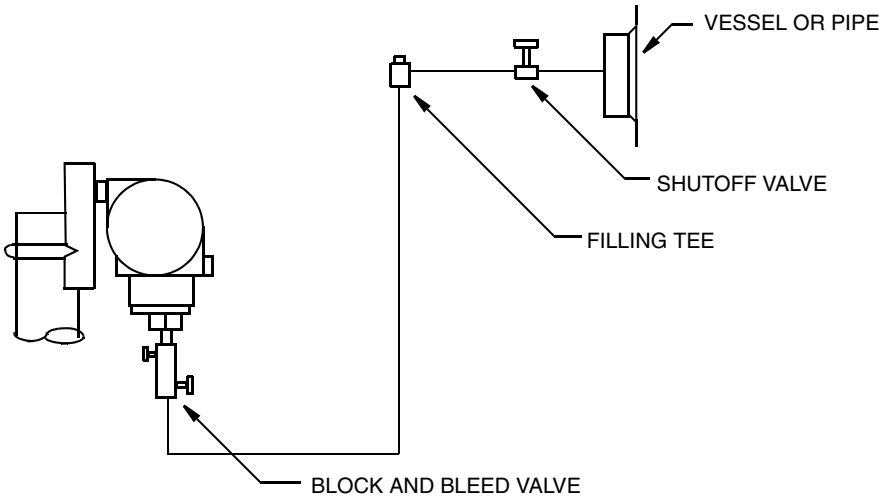

Figure 11. Hot Process Piping

Positioning the Housing

The transmitter housing (topworks) can be rotated up to one full turn in the counterclockwise direction when viewed from above for optimum access to adjustments, display, or conduit

connections. Housings have either an anti-rotation screw or a retention clip that prevent the housing from being rotated beyond a safe depth of housing/sensor thread engagement.

WARNING

If the electronics housing is removed for maintenance, it must be hand tightened to the bottom of the threads, but not over-tightened upon reassembly. See "Removing and Reinstalling a Housing Assembly" on page 57.

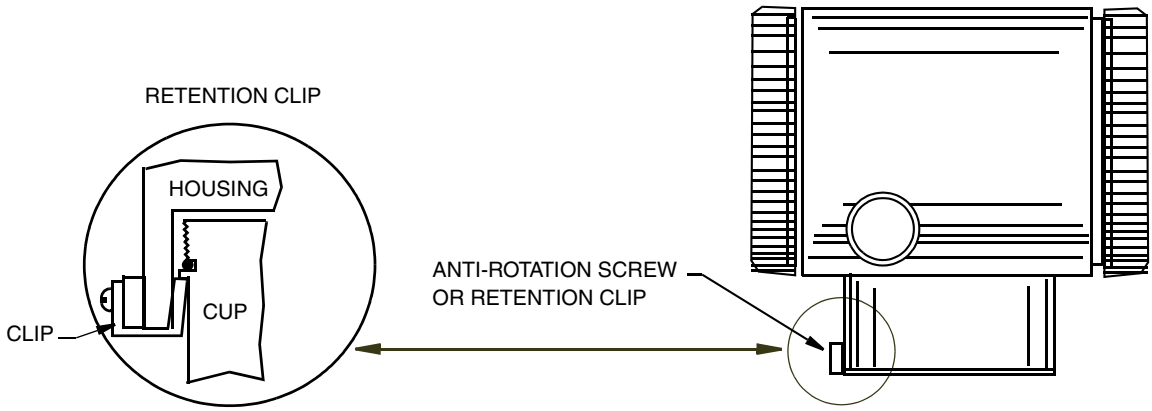

Figure 12. Housing Screw or Clip Location

Positioning the Display

The display (optional in some models) can be rotated within the housing to any of four positions at 90° increments. To do this, grasp the two tabs on the display and rotate it about 10° in a counterclockwise direction. Pull out the display. Ensure that the O-ring is fully seated in its groove in the display housing. Turn the display to the desired position, reinsert it in the electronics module, aligning the tabs on the sides of the assembly, and twist it in the clockwise direction.

CAUTION

Do **not** turn the display more than 180° in any direction. Doing so could damage its connecting cable.

Setting the Write Protect Jumper

Your transmitter has write protection capability. This means that the external zero, local display, and remote communications can be prevented from writing to the electronics. Write protection is set by moving a jumper that is located in the electronics compartment behind the optional display. To activate write protection, remove the display as described in the previous section, then remove the jumper or move it to the lower position as shown on the exposed label. Replace the display.

Cover Locks

Electronic housing cover locks, shown in Figure 13, are provided as standard with certain agency certifications and as part of the Custody Transfer Lock and Seal option. To lock the covers, unscrew the locking pin until approximately 6 mm (0.25 in) shows, lining up the hole in the pin with the hole in the housing. Insert the seal wire through the two holes, slide the seal onto the wire ends and crimp the seal

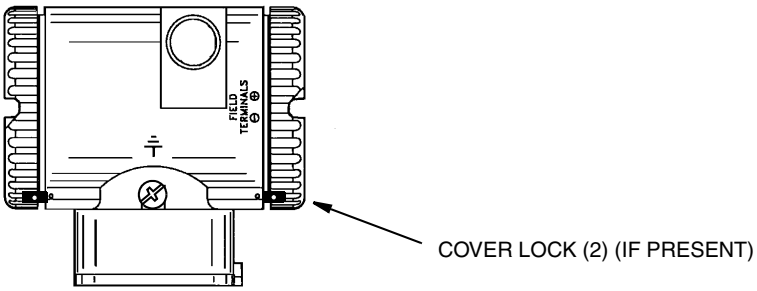

Figure 13. Cover Lock Location

Wiring

The installation and wiring of your transmitter must conform to local code requirements.

WARNING

ATEX requires that when the equipment is intended to be used in an explosive atmosphere caused by the presence of combustible dust, cable entry devices and blanking elements shall provide a degree of ingress protection of at least IP6X. They shall be suitable for the conditions of use and correctly installed.

NOTE

Invensys recommends the use of transient/surge protection in installations prone to high levels of electrical transients and surges.

Accessing Transmitter Field Terminals

For access to the field terminals, thread the cover lock (if present) into the housing to clear the threaded cover and remove the cover from the field terminals compartment as shown in Figure 14. Note that the embossed letters **FIELD TERMINALS** identify the proper compartment.

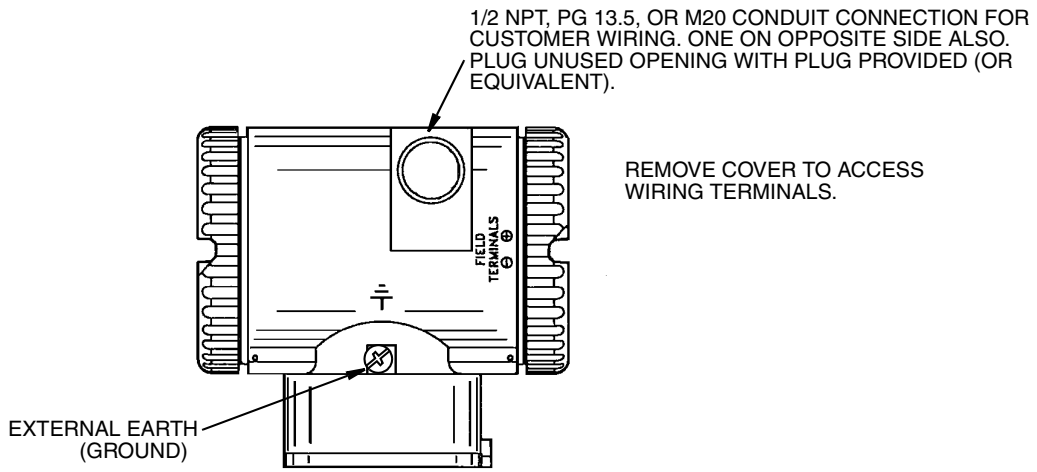

Figure 14. Accessing Field Terminals

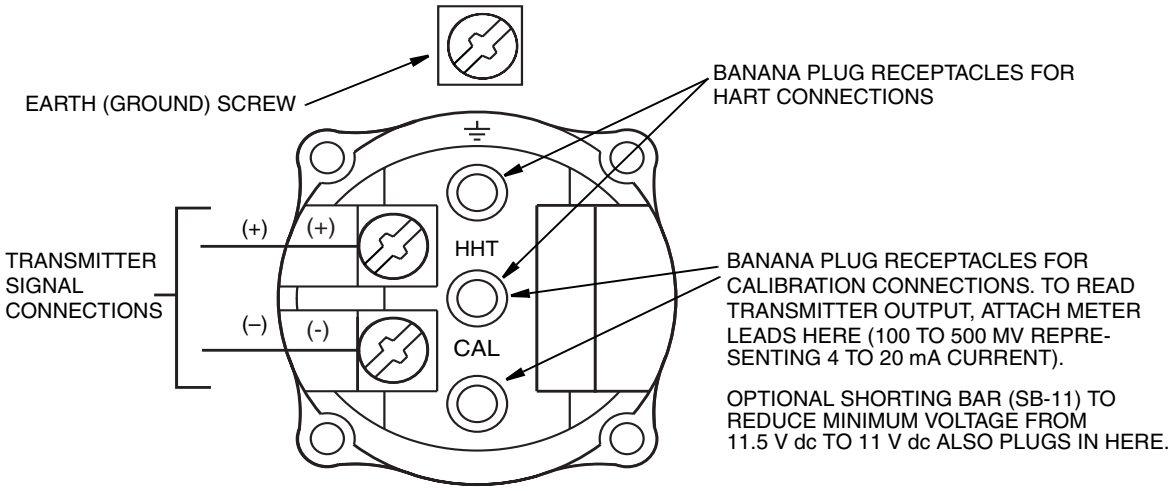

Figure 15. Identification of Field Terminals

Wiring the Transmitter to a Control Loop

When wiring the transmitter, the supply voltage and loop load must be within specified limits. The supply output load vs. voltage relationship is:

R_{MAX} = 47.5 (V - 11.5) and is shown in Figure 16.

— NOTE

The relationship when the optional shorting bar is used is:

R_{MAX} = 46.8 (V - 11).

Any combination of supply voltage and loop load resistance in the shaded area can be used. To determine the loop load resistance (transmitter output load), add the series resistance of each component in the loop, excluding the transmitter. The power supply must be capable of supplying 22 mA of loop current.

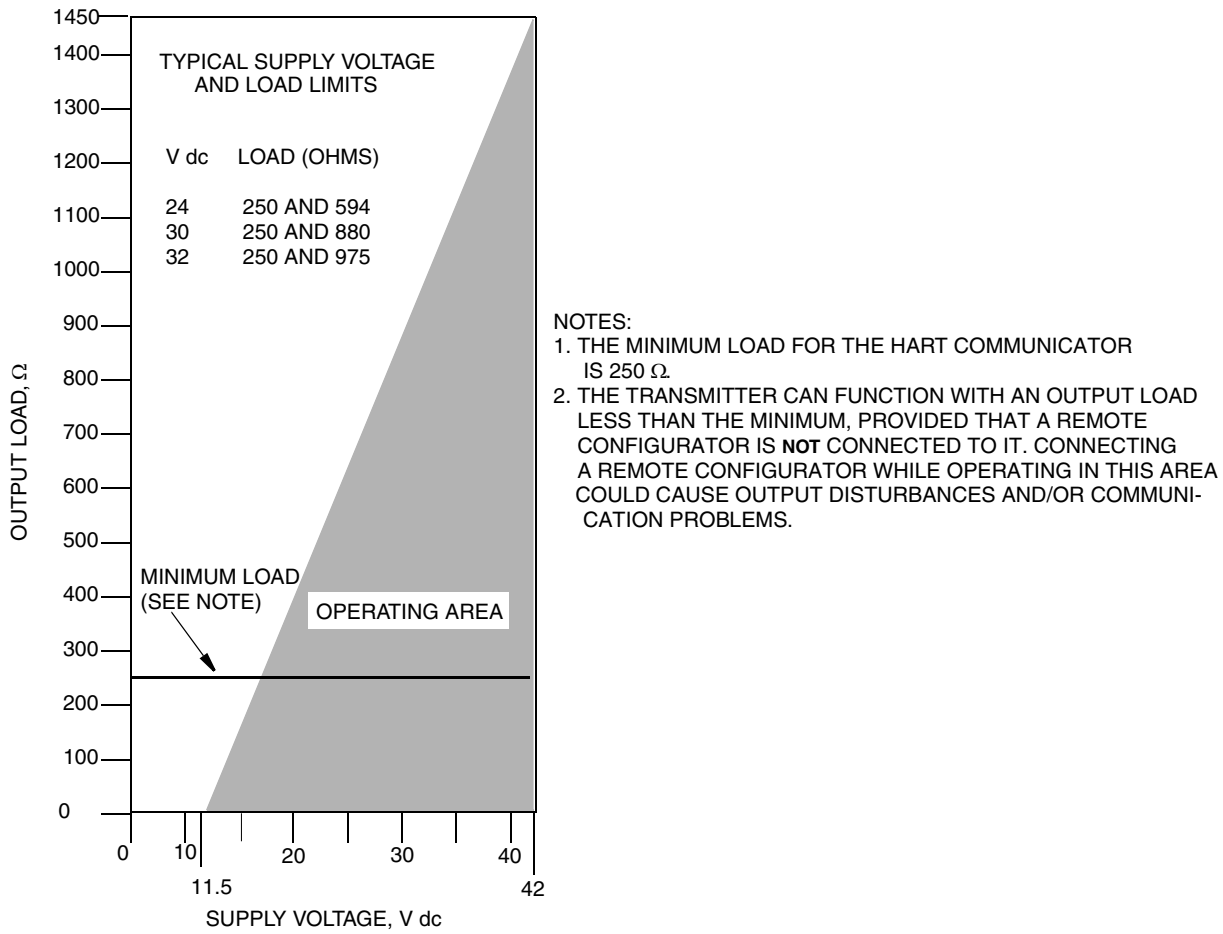

Figure 16. Supply Voltage and Loop Load

Examples:

1. For a loop load resistance of 880 Ω, the supply voltage can be any value from 30 to 42 V dc.
2. For a supply voltage of 24 V dc, the loop load resistance can be any value from 250 to 594 Ω (zero to 594 Ω without a HART Communicator connected to the transmitter).

To wire one or more transmitters to a power supply, proceed with the following steps.

1. Remove the cover from the transmitter field terminals compartment.
2. Run signal wires (0.50 mm^2 or 20 AWG, typical) through one of the transmitter conduit connections. Use twisted single pair to protect the 4 to 20 mA output and/or remote communications from electrical noise. Maximum recommended length for signal wires is:
   - 3050 m (10,000 ft) **using single pair cable** and adhering to requirements of HART physical layer implementation defined in HART Document HCF_SPEC-53. Use CN=1 when calculating max. lengths.
   - 1525 m (5000 ft) in a multidrop (15 devices maximum) mode. Screened (shielded) cable could be required in some locations.

NOTE

Do not run transmitter wires in same conduit as mains (ac power) wires.

3. If shielded cable is used, earth (ground) the shield at the power supply **only**. Do not ground the shield at the transmitter.
4. Plug unused conduit connection with the 1/2 NPT, PG 13.5, or M20 metal plug provided (or equivalent). To maintain specified explosionproof and dust-ignitionproof protection, plug must engage a **minimum** of five full threads for 1/2 NPT connections; seven full threads for M20 and PG 13.5 connections.
5. Connect an earth (ground) wire to the earth terminal in accordance with local practice.

! CAUTION

If the signal circuit must be earthed (grounded), it is preferable to do so at the negative terminal of the dc power supply. To avoid errors resulting from earth loops or the possibility of short-circuiting groups of instruments in a loop, there should be only one earth in a loop.

6. Connect the power supply and receiver loop wires to the "+" and "–" terminal connections.
7. Connect receivers (such as controllers, recorders, indicators) in series with power supply and transmitter as shown in Figure 17.
8. Reinstall the cover onto the housing by rotating it clockwise to seat the O-ring into the housing and then continue to hand tighten until the cover contacts the housing metal-to-metal. If cover locks are present, lock the cover per the procedure described in "Cover Locks" on page 23.
9. If wiring additional transmitters to the same power supply, repeat Steps 1 through 8 for each additional transmitter. The setup with multiple transmitters connected to a single power supply is shown in Figure 18.
10. A HART Communicator or PC-Based Configurator can be connected in the loop between the transmitter and the power supply as shown in Figures 17 and 18. Note that a minimum of 250 Ω must separate the power supply from the HART Communicator and PC-Based Configurator.

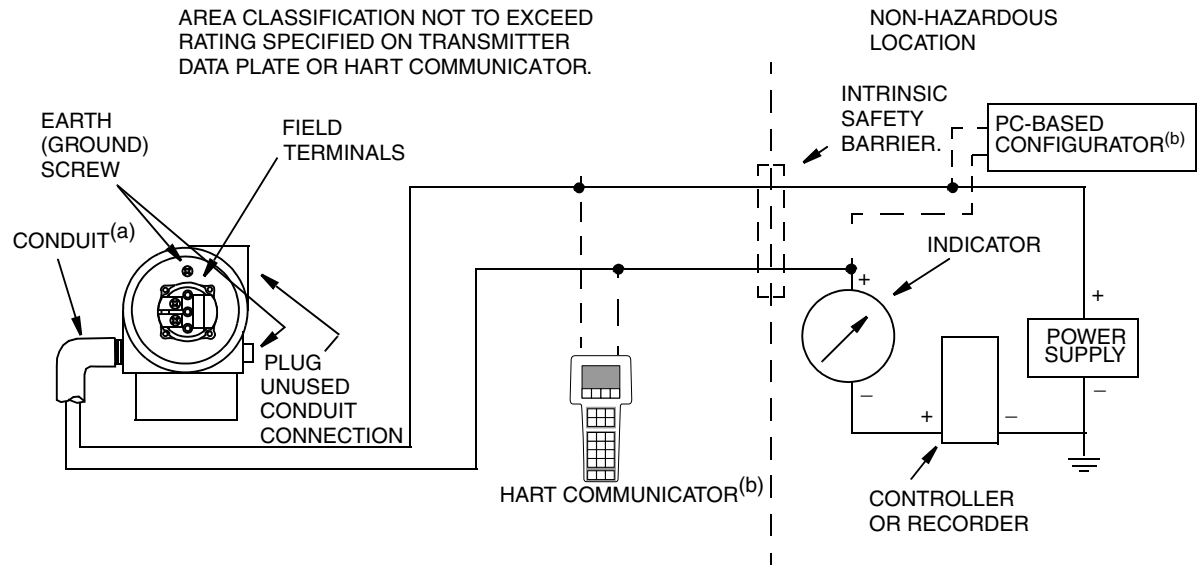

(a) RUN CONDUIT DOWN TO AVOID MOISTURE BUILDUP IN TERMINALS COMPARTMENT.
(b) THERE MUST BE AT LEAST 250 Ω TOTAL RESISTANCE BETWEEN THE HART COMMUNICATOR OR PC-BASED CONFIGURATOR AND THE POWER SUPPLY.

Figure 17. Loop Wiring Transmitters

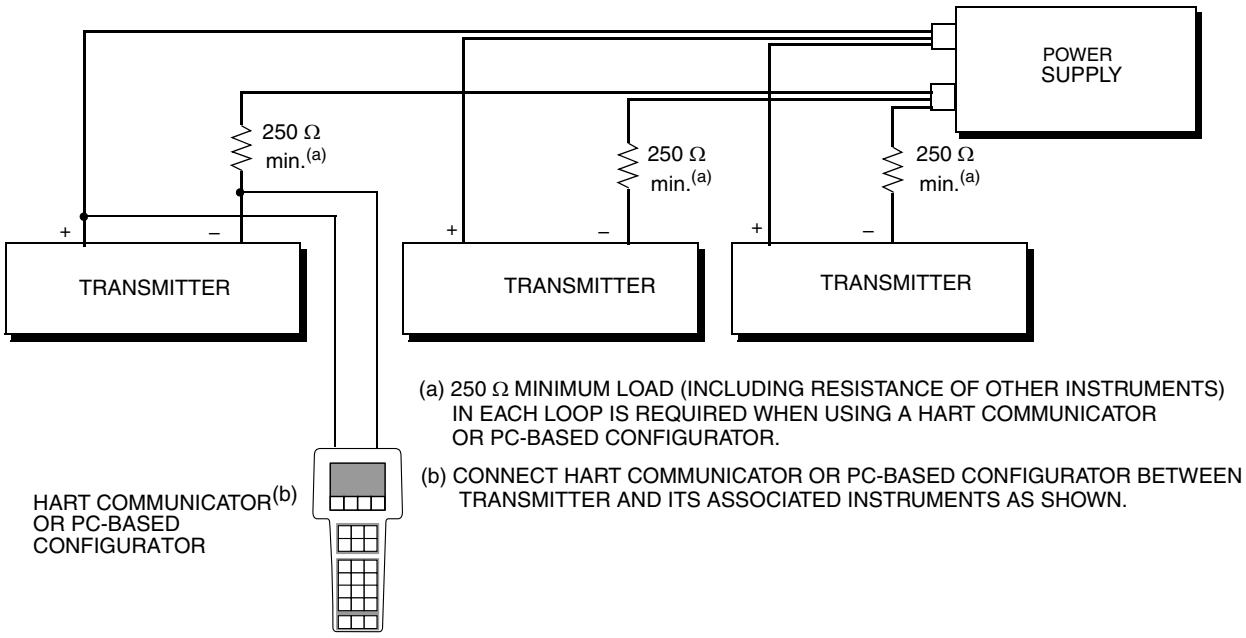

(a) 250 Ω MINIMUM LOAD (INCLUDING RESISTANCE OF OTHER INSTRUMENTS) IN EACH LOOP IS REQUIRED WHEN USING A HART COMMUNICATOR OR PC-BASED CONFIGURATOR.

(b) CONNECT HART COMMUNICATOR OR PC-BASED CONFIGURATOR BETWEEN TRANSMITTER AND ITS ASSOCIATED INSTRUMENTS AS SHOWN.

Figure 18. Wiring Several Transmitters to a Common Power Supply

Multidrop Communication

"Multidropping" refers to the connection of several transmitters to a single communications transmission line. Communications between the host computer and the transmitters takes place digitally with the analog output of the transmitter deactivated. With the HART communications

protocol, up to 15 transmitters can be connected on a single twisted pair of wires or over leased telephone lines.

The application of a multidrop installation requires consideration of the update rate necessary from each transmitter, the combination of transmitter models, and the length of the transmission line. Multidrop installations are not recommended where Intrinsic Safety is a requirement. Communication with the transmitters can be accomplished with any HART compatible modem and a host implementing the HART protocol. Each transmitter is identified by a unique address (1-15) and responds to the commands defined in the HART protocol.

Figure 19 shows a typical multidrop network. Do not use this figure as an installation diagram. Contact the HART Communications Foundation, (512) 794-0369, with specific requirements for multidrop applications.

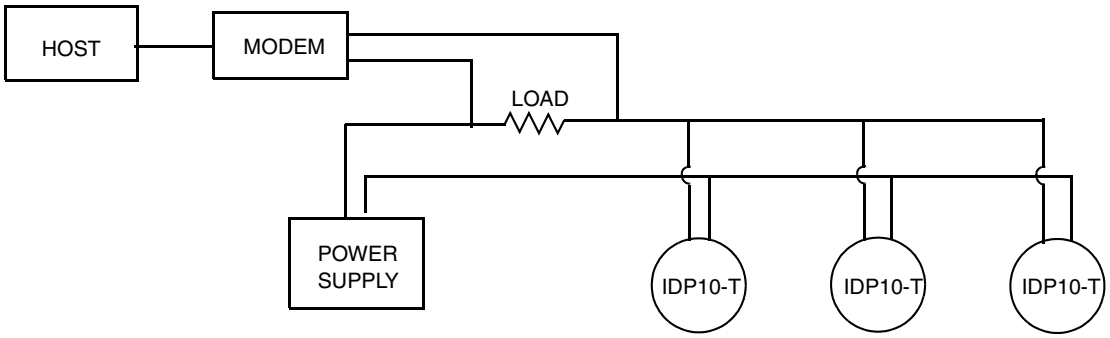

Figure 19. Typical Multidrop Network

The HART Communicator can operate, configure, and calibrate IASPT transmitters with HART communication protocol in the same way as it can in a standard point-to-point installation.

NOTE

IASPT transmitters with HART communication protocol are set to poll address 0 (**POLLADR 0**) at the factory, allowing them to operate in the standard point-to-point manner with a 4 to 20 mA output signal. To activate multidrop communication, the transmitter address must be changed to a number from 1 to 15. Each transmitter must be assigned a unique number on each multidrop network. This change deactivates the 4 to 20 mA analog output.

Connecting the Transmitter to an I/A Series System

The transmitter can also send its measurement to an I/A Series system as a digital signal via an FBM214/215. Wiring terminations at the transmitter are the same as described above. For other system wiring details, refer to the installation instructions provided with the I/A Series system.

3. Operation Via Local Display

A local display, as shown in Figure 20, has two lines of information. The upper line is a 5-digit numeric display (4-digit when a minus sign is needed); the lower line is a 7-digit alphanumeric display. The display provides local indication of measurement information.

The display can be configured to meet your specific needs. If configured **Show 1**, M1 is displayed. If configured **Show 2**, M2 is displayed. To temporarily view the alternate measurement, press the **Enter** button. After showing this measurement for a brief period, the display reverts to the configured display. If configured **Toggle**, the display toggles between M1 and M2. When M2 is displayed, an M2 message blinks in the lower right of the display.

The display also provides a means for performing calibration and configuration, viewing the database, testing the display, and reranging the transmitter via the 2-button keypad. You can access these operations by means of a multi-level menu system. Entry to the Mode Select menu is made (from normal operating mode) by pressing the **Next** button. You can exit this menu, restore your prior calibration or configuration, and return to the normal operating mode at any time by going to **Cancel** and pressing the **Enter** button.

The top level structure diagram is shown in Figure 21.

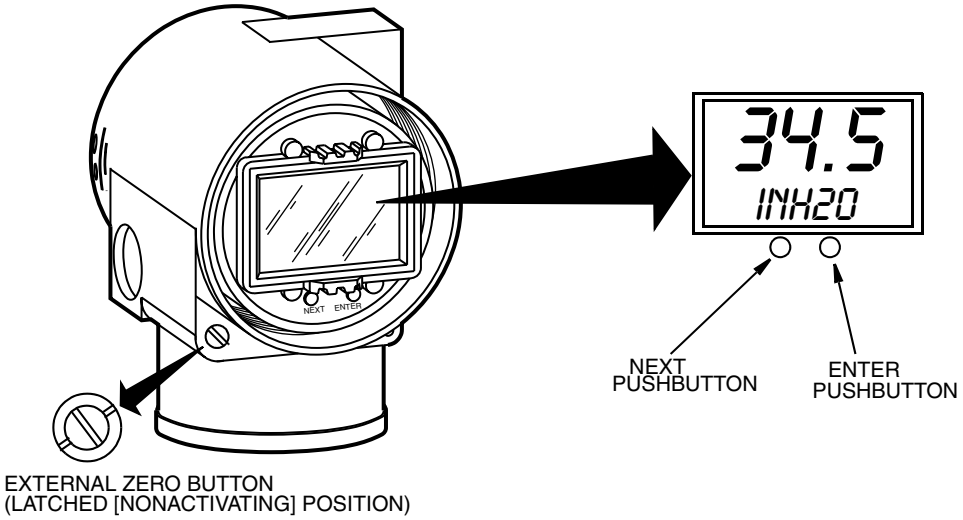

Figure 20. Local Display Module

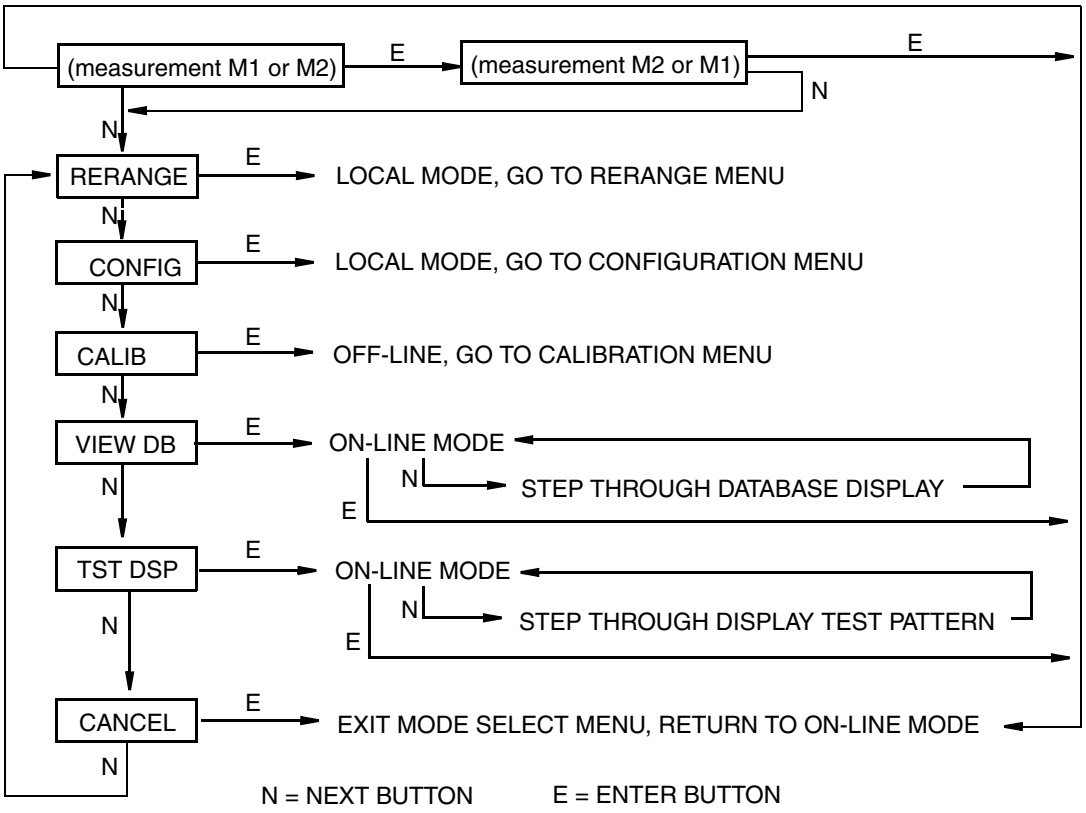

Figure 21. Top Level Structure Diagram

Entering Numerical Values

The general procedure for entering numerical values in Calibration and Configuration is as follows:

1. At the appropriate prompt, press the **Enter** button. The display shows the last (or default) value with the first digit flashing.
2. Use the **Next** button to select the desired first digit, then press the **Enter** button. Your selection is entered and the second digit flashes.
3. Repeat Step 2 until you have created your new value. If the number has less than five characters, use leading or trailing zeros for the remaining spaces. When you have configured the fifth space, the display prompts you to place the decimal point.
4. Move the decimal point with the **Next** button until it is where you want it and press the **Enter** button.

— NOTE

1. The decimal point may not be placed directly after the first digit. For example, you can not enter a value as 1.2300; you must enter it as 01.230.
2. The decimal position is identified by flashing except at the position after the fifth digit. At that position (representing a whole number), the decimal point is assumed.

5. The display advances to the next menu item.

Reranging

You can access the Rerange mode in the top level menu (see Figure 21). Entry to the Mode Select menu is made (from normal operating mode) by pressing the **Next** button. The display reads **RERANGE**. You can then adjust **M1 URV** and/or **M1 LRV** in the following two submenus.

M1 URV:

To edit the upper range value, press **Enter** at the prompt **M1 URV**. Use the procedure "Entering Numerical Values" on page 30 section to edit this parameter.

M1 LRV:

Similar to **M1URV** immediately above.

Viewing the Database

You can access the View Database mode by the multi-level menu system described above. Entry to the Mode Select menu is made (from normal operating mode) by pressing the **Next** button. The display reads **RERANGE**. Use the **Next** button to get to **VIEW DB**. Acknowledge your choice of this selection by pressing the **Enter** button. The display shows the first item in the database. You can step through the database display by repeated use of the **Next** button. You can abort this procedure at any time by pressing the **Enter** button.

Viewing the Pressure Range

The values of **M1LRV** and **M1 URV** can be viewed in **VIEW DB** as described above.

Testing the Display

You can access the Test Display mode by the same multi-level menu system that was used to enter Reranging, Calibration, Configuration, and View Database mode. Entry to the Mode Select menu is made (from normal operating mode) by pressing the **Next** button. The display reads **RERANGE**. Use the **Next** button to get to **TST DSP**. Acknowledge your choice of this selection by pressing the **Enter** button. The display shows the first test segment pattern. You can step through the five patterns by repeated use of the **Next** button. You can abort the test at any time by pressing the **Enter** button. The five patterns are shown in Figure 22.

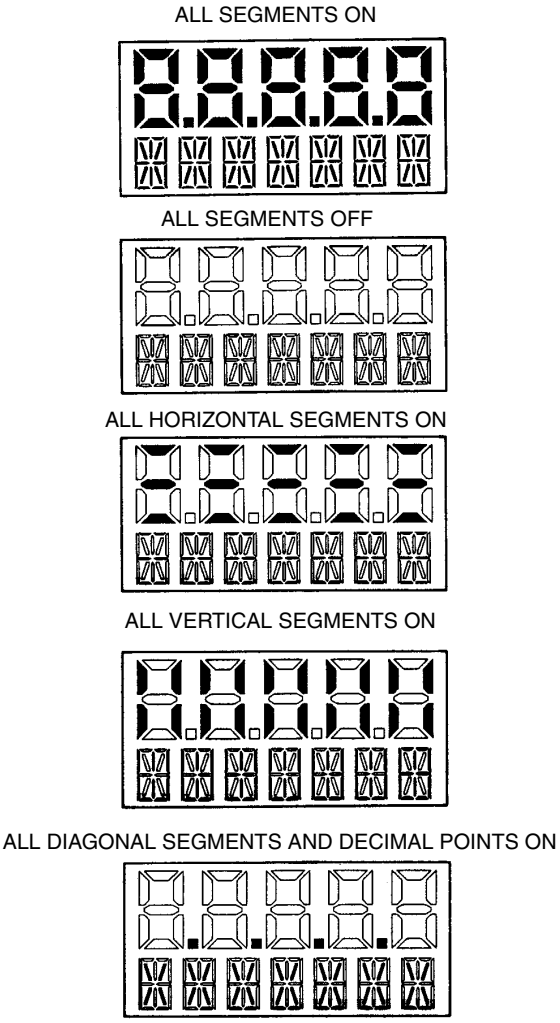

Figure 22. Display Test Segment Patterns

Error Messages

Table 4. Operation Error Messages

Parameter	Condition Tested	Error Message	Action
Normal Operation	Write Protection Enabled	WR PROT	Displays periodically to notify user that unit is in Write Protect.
	Any non-On-line Condition	OFFLINE	Notifies user of a non-On-line condition.
Startup	Database OK or corrupted	INITERR	User should perform SET GDB procedure. See “SET GDB:” on page 51.

4. Calibration

NOTE

1. For best results in applications where high accuracy is required, rezero the transmitter output once it has stabilized at the final operating temperature.
2. Zero shifts resulting from position effects and/or static pressure effects can be eliminated by rezeroing the transmitter output.
3. After calibrating transmitters operating with a 4 to 20 mA (or 1 to 5 V dc) output signal, check the underrange and overrange output values to ensure that they extend beyond 4 and 20 mA (or 1 and 5 V dc) respectively.

General Calibration Notes

1. Each transmitter is factory characterized over its full rated pressure range. One benefit of this process is that every transmitter can measure any applied pressure within its range limits regardless of the calibrated range. The applied pressure is measured and converted into an internal digital value of pressure. This digital value of pressure is always available whether the transmitter is calibrated or not. Calibration assures that the transmitter rated accuracy is achieved over the calibrated range.
2. The internal digital value of pressure can be displayed on the optional local display, transmitted digitally, and converted to a 4 to 20 mA analog output signal.
3. Each transmitter is factory calibrated to either a specified or a default calibrated range. This calibration optimizes the accuracy of the internal digital value of pressure over that range. If no range is specified, the default range is zero to the sensor upper range limit (URL).
4. The transmitter database has configurable values for both lower range value (LRV) and upper range value (URV). These values are used for two functions.
   a. Defining the Calibrated Range When Using Local Pushbuttons for Calibration:
      - When either **CAL LRV** or **CAL URV** is initiated from the local pushbuttons, the transmitter expects that the pressure applied at the time the button is pressed is equal to the LRV or URV value respectively.
      - This function trims the internal digital value of pressure; that is, it performs a calibration based on the application of accurate pressures equal to the values entered for LRV and URV in the transmitter database.
      - This function also sets the 4 and 20 mA output points; that is, the 4 and 20 mA points correspond to the values of LRV and URV in the database.
      - The value of LRV can be larger than the value of URV.
   b. Reranging Without the Application of Pressure:
      - Since the transmitter continually determines an internal digital value of the measured pressure from the lower range limit (LRL) to the upper range limit

(URL), the 4 and 20 mA output points can be assigned to any pressure values (within the span and range limits) without application of pressure.

- The reranging function is accomplished by entering new database values for LRV and URV.
- Reranging does not affect the calibration of the transmitter; that is, it does not affect the optimization of the internal digital value of pressure over a specific calibrated range.
- If the reranged LRV and URV are not within the calibrated range, the measured values may not be as accurate as when they are within the calibrated range.

5. When the optional local display is used, the internal digital value of pressure is sent directly to the indicator.
   - The display can show any measured pressure in selected units regardless of the calibrated range and the values of LRV and URV (within the limits of the transmitter and display).
   - If the measured pressure is outside the range established by the LRV and URV values in the database, the display shows the measurement but also continually blinks to indicate that the measurement is out of range. The mA current signal is saturated at either the low or high overrange limit respectively but the display continually shows the pressure.
6. When configured for 4 to 20 mA output, the internal digital value of pressure is converted to an analog current signal.
   - The transmitter sets the output at 4 mA for the LRV and 20 mA for the URV.
   - There is an independent trim on the digital-to-analog conversion stage. This trim allows for slight adjustment of the 4 and 20 mA outputs. This compensates for any slight difference that exists between the transmitter mA output and an external reference device which is measuring the current.
   - The mA trim does not affect the calibration or the reranging of the transmitter and does not affect the internal digital value of pressure or the transmission or display of measured pressure.
   - The mA trim can be done with or without pressure applied to the transmitter.
7. Zeroing from the local display does not affect the span.

   When the transmitter is zeroed to compensate for installed position effect, the transmitter can have either LRV pressure applied (**CAL LRV**) or zero pressure applied (**CAL AT0**). If the range is zero-based, either method produces the same result. However, if the range is not zero-based, it is advantageous to have both methods available.

   For example, consider a pressure transmitter having a range of 50 to 100 psig. If it is not feasible to vent the transmitter to atmosphere for zeroing, it can be zeroed while the LRV pressure of 50 psi is applied by using the **CAL LRV** function. On the other hand, if the transmitter has been installed but there is no pressure in the process line yet, it can be zeroed while open to atmosphere by using the **CAL AT0** function.

a. Zeroing with LRV Pressure Applied (**CAL LRV**):

- Before using this zeroing function, apply a pressure to the transmitter equal to the value of LRV stored in the transmitter database.
- When you zero the transmitter, the internal digital value of the pressure is trimmed to be equal to the value of LRV stored in the database and the mA output set to 4 mA.
- If zeroing is done when the applied pressure is different from the LRV pressure value in the database, the internal digital value of pressure is biased by the difference in the values but the output is still set at 4 mA.
- The **CAL LRV** and **CAL URV** function should be used when calibrating a transmitter for a specific range with known input pressures applied for the LRV and URV.

b. Zeroing a Gauge Pressure Transmitter with Zero Pressure Applied (**CAL AT0**):

— NOTE

Do **not** use the **CAL AT0** function with an absolute pressure transmitter. If an absolute pressure transmitter is vented to atmosphere, it does **not** have zero pressure applied but instead has the barometric pressure (approximately 14.7 psia) applied.

- Make sure that the applied pressure is at zero. This means venting the transmitter to atmosphere.
- When you zero the transmitter, the internal digital value of the pressure is trimmed to be equal to zero and the mA output set to an appropriate value such that the mA output is a normal 4 mA when the LRV pressure is applied later.

c. Zeroing an Absolute Pressure Transmitter

To zero an absolute pressure transmitter, the LRV can be temporarily set to the barometric pressure and a CAL LRV function performed with the transmitter vented to atmosphere. Then, the LRV can be set back to the proper value.

Calibration Setup

The following sections show setups for field or bench calibration. Use test equipment that is at least three times as accurate as the desired accuracy of the transmitter.

— NOTE

It is not necessary to set up calibration equipment to rerange the transmitter to a different range. The transmitter can be accurately reranged by simply changing the lower range value and the upper range value, which are stored in the transmitter database.

Setup of Electronic Equipment

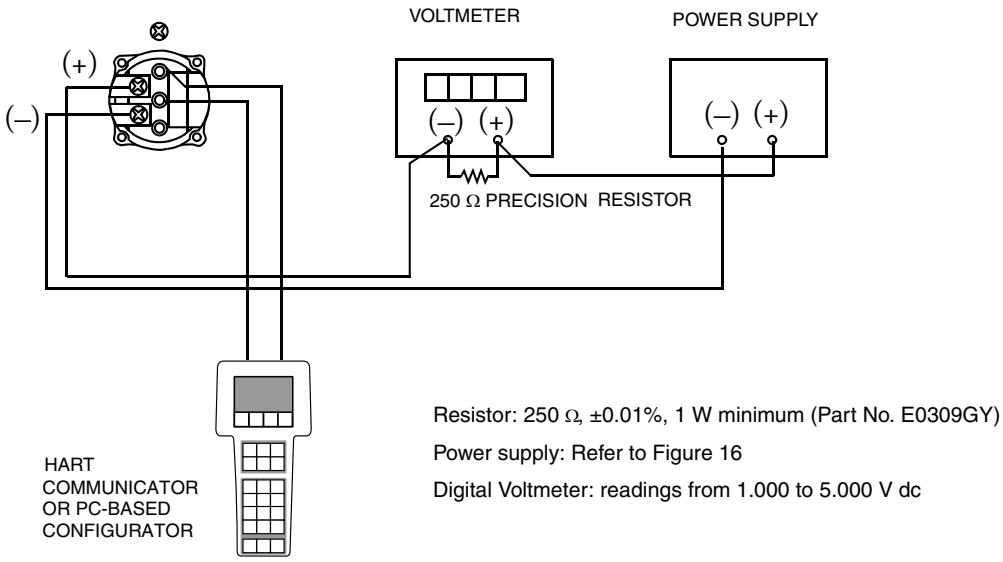

Figure 23. 4 to 20 mA Output Calibration Setup of Electronic Equipment

Field Calibration Setup

Field calibration is performed without disconnecting the process piping. This is only possible if the transmitter is piped as shown in Figure 24.

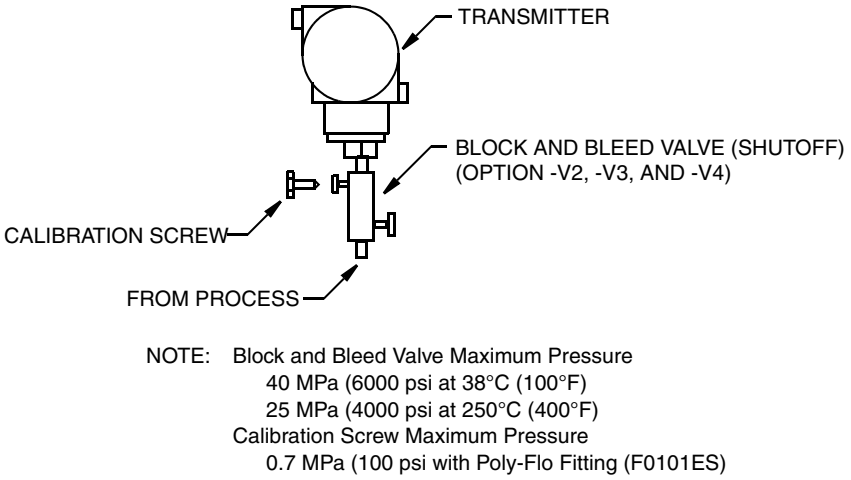

Figure 24. Transmitter Piping

If the transmitter is to be removed from the process for calibration, refer to “Bench Calibration Setup”below.

An adjustable air supply and a pressure measuring device are required. For example, a dead weight tester or an adjustable clean air supply and pressure gauge can be used.

Bench Calibration Setup

The bench calibration setup requires disconnecting the process piping. For calibration setup without disconnecting the process piping, refer to “Field Calibration Setup”above.

The bench calibration setup is shown in Figure 25. If calibrating the output signal, also connect equipment as shown in Figure 23

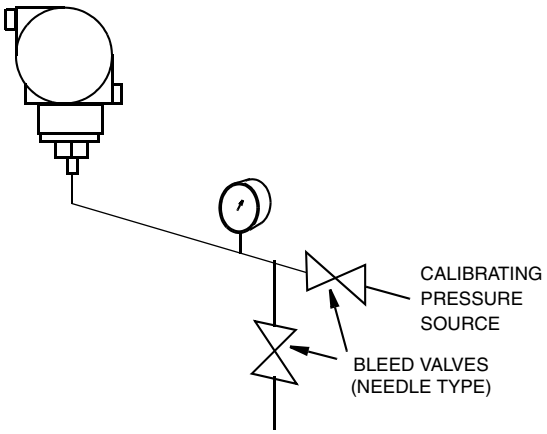

Figure 25. Bench Calibration Setup

Calibration Using a PC20

To calibrate the transmitter using a PC20 Configurator, follow the procedure in MI 020-495.

Calibration Using a PC50

To calibrate the transmitter using a PC50 Configurator, follow the procedure in MI 020-501 and MI 020-520.

Calibration Using a HART Communicator

To calibrate the transmitter using a HART Communicator, follow the procedure in MI 020-366.

Calibration Using the Optional Local Display

To access the Calibration mode (from normal operating mode), press the **Next** button. The display reads **CALIB**, the first item on the menu. Acknowledge your choice of this selection by pressing the **Enter** button. The display shows the first item in the Calibration menu.

NOTE

1. 1. During calibration, a single change could affect several parameters. For this reason, if an entry is entered in error, re-examine the entire database or use the **Cancel** feature to restore the transmitter to its starting configuration and begin again.

2. 2. During adjustment of 4 and 20 mA in the Calibration menu, the milliampere output does not reflect live measurement values.

Table 5. Calibration Menu

Item	Description
CAL AT0[(a)]	Calibrate at zero pressure.
CAL LRV	Calibrate with pressure at 0% of transmitter range (LRV).
CAL URV	Calibrate with pressure at 100% of transmitter range (URV).
ADJ 4mA	Adjust nominal 4 mA output.
ADJ20mA	Adjust nominal 20 mA output.
CALDATE	Enter the calibration date.
ADJ 4mA causes the following four submenus.	
A 4mA∆∆∆	Increase 4 mA output by large step.
A 4mA∇∇	Decrease 4 mA output by large step.
A 4mA∆	Increase 4 mA output by small step.
A 4mA∇	Decrease 4 mA output by small step.
ADJ 20mA causes the following four submenus.	
A 20mA∆∆∆	Increase 20 mA output by large step.
A 20mA∇∇	Decrease 20 mA output by large step.
A 20mA∆	Increase 20 mA output by small step.
A 20mA∇	Decrease 20 mA output by small step.

(a) Function not applicable to absolute pressure transmitters.

NOTE

It is not necessary to use the **ADJ4mA** or **ADJ20mA** menu selections (commonly known as mA Trim) unless there is a plant requirement to make the 4 and 20 mA output values exactly match readings on certain plant calibration equipment and the calibration operations done result in a small but unacceptable difference between the transmitter mA output and the test equipment mA readout values.

Proceed to calibrate your transmitter by using the **Next** key to select your item and the **Enter** key to specify your selection per Figure 26 and 27. At any point in the calibration you can **Cancel**, restore your prior calibration and return to the on-line mode or **Save** your new calibration.

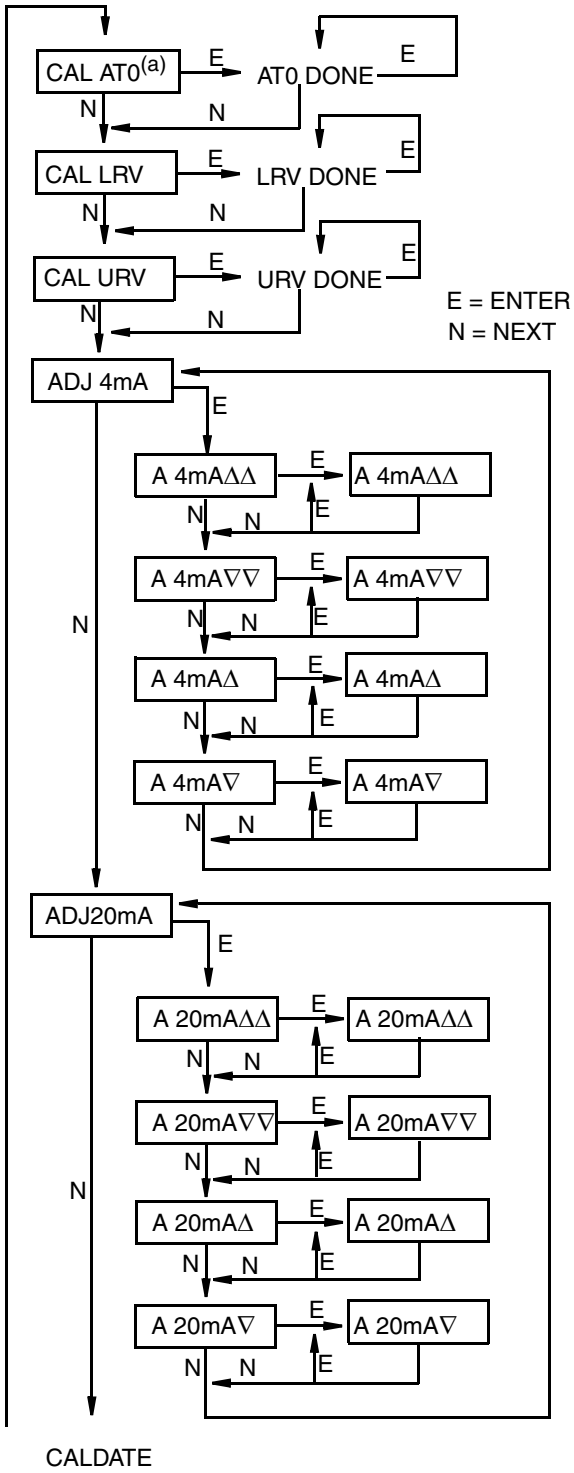

(continued on next figure)

CAL AT0: To set or reset the zero point at zero pressure, apply zero pressure to the transmitter and, at display of **CAL AT0**, press **Enter**. This can be done whether LRV is zero or not. Completion is indicated by the display **AT0 Done**.

CAL LRV: To set or reset 0% of range input, apply pressure to the transmitter equal to the lower range value (LRV) in the transmitter database and, at display of **CAL LRV**, press **Enter**. Completion is indicated by the display **LRV Done**.

CAL URV: To set or reset 100% of range input, apply pressure to the transmitter equal to the upper range value (URV) in the transmitter database and, at display of **CAL URV**, press **Enter**. Completion is indicated by the display **URV Done**.

ADJ4mA: If you configured your transmitter operating mode as 4 to 20 mA, you can adjust the 4 mA output by going to **ADJ4mA** using the **Next** button and press **Enter**. This menu item is bypassed if you configured your transmitter for multidrop mode (poll address other than zero).

To increase the 4 mA output by a large (0.025 mA) step, press **Enter** at the display **A 4mA**ΔΔ. To decrease it by a large step, go to the display **A 4mA**∇∇ by pressing the **Next**

Note:
(a) Not applicable to Absolute Pressure Transmitters.

Figure 26. Calibration Structure Diagram

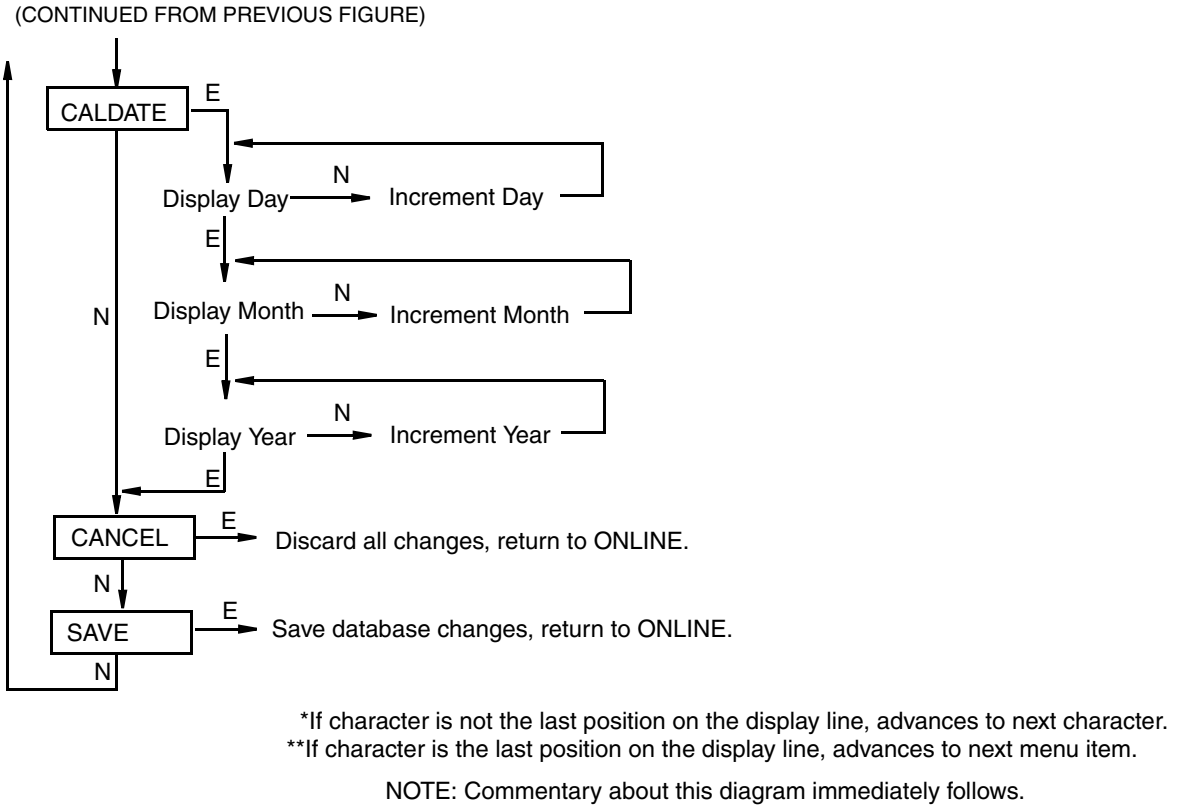

Figure 27. Calibration Structure Diagram (Continued)

Commentary on Figure 27

CALDATE

This is not a required entry but can be used for recordkeeping or plant maintenance purposes. To edit the calibration date, go to **CALDATE** with the **Next** button and press **Enter**. You then can change the day, month, and year. The display shows the last date with the day flashing. Use the **Next** button to step through the menu of digits to select the desired day, then press **Enter**. Repeat this process for the month and year.

Zero Adjustment Using External Zero Button

An optional external zero adjustment mechanism in the electronics housing allows calibration at zero differential pressure (the **CAL AT0** function) or at the lower range value differential pressure (the **CAL LRV** function) without removing the electronics compartment cover. The mechanism is magnetically activated through the housing wall to prevent moisture from entering the enclosure.

To use this feature:

1. Unlatch the external zero button by turning it 90° in a counterclockwise direction so that the screwdriver slot lines up with the two holes in the face of the adjacent part. Do **not** push the button in with the screwdriver while doing this.

2. To set or reset the zero point at zero pressure, apply zero pressure to the transmitter and press the external zero button until the display reads **CAL AT0**. Release the button. The display reads **CAL WAIT** and then **RESET** (calibration is complete).

   To set or reset the 0% of range input, apply the lower range value (LRV) pressure to the transmitter and press and hold the external zero button until the display reads **CAL LRV** (it reads **CAL AT0** first). Release the button. The display reads **CAL WAIT** and then **RESET** (calibration is complete).

— NOTE

If the optional display is not present, the same functions can be accomplished by depending on the length of time the external zero button is depressed. Press and hold the button for 1 to 3 seconds for **CAL AT0** or for 5 or more seconds for **CAL LRV**. Therefore, if your LRV is zero, just depress the button for a few seconds. However, if your LRV is not zero, use **caution** when using the external zero button without the optional display because you must rely strictly on the length of time the button is depressed to differentiate between **CAL AT0** and **CAL LRV**.

   Other possible messages are:
   DISABLD if **EX ZERO** is configured **EXZ DIS**
   IGNORED if the transmitter is not in the on-line mode.
   WP ENAB if write protection jumper is in write protect position.

   If additional rezeroing is required after Steps 1 and 2 have been accomplished, repeat Step 2.

3. Relatch the external zero button by turning it 90° in a clockwise direction to prevent accidental pressing of the button. Do **not** push the button in with the screwdriver while doing this.

Error Messages

Table 6. Calibration Error Messages

Parameter	Condition Tested	Error Message	User Action
Password Protection	Password	BAD PWD	Bad password entered, use another.
Write Protection	Write protection enabled	REJECT	Displays when user attempts an action that is write protected.
ZERO	Internal offset too large	BADZERO	Check applied pressure, configured **M1 LRV** and configured **M1 EOFF**.
SPAN	Slope too large or too small	BADSPAN	Check applied pressure, configured **M1 LRV** and configured **M1 EFAC**.
M1 URV	M1URV > max pressure in EGU	URV>FMX	Entered pressure is greater than maximum rated pressure of transmitter. Check entry. Verify EGUs.
	M1URV < min pressure in EGU	URV<FMN	Entered pressure is less than minimum rated pressure of transmitter. Check entry. Verify EGUs.
	M1 URV = M1 LRV	LRV=URV	Cannot set span to 0. Check entry. Check **M1 LRV**.
	M1 turndown exceeds limit	BADTDWN	Check entry. Check **M1 LRV**.
M1 LRV	M1LRV > max pressure in EGU	LRV>FMX	Entered pressure is greater than maximum rated pressure of transmitter. Check entry. Verify EGUs.
	M1LRV < min pressure in EGU	LRV<FMN	Entered pressure is less than minimum rated pressure of transmitter. Check entry. Verify EGUs.
	M1 URV = M1 LRV	LRV=URV	Cannot set span to 0. check entry. Check **M1 URV**.
	M1 turndown exceeds limit	BADTDWN	Check entry. Check **M1 URV**.

5. Configuration

Configurable Parameters

The following table lists all the configurable parameters and the factory default for the IAP10-T and IGP10-T Transmitters. The factory default values have been customized if the transmitter was ordered with optional feature -C2. The table also shows which parameters are configurable with the integral vs. remote configurators.

Table 7. Configurable Parameters

Parameter	Capability	Factory Default	Configurable with		Application Requirement
			Integ. Indic.	Remote Config.	
Descriptors					
Tag Number	8 characters max	Tag Number	No	Yes	
Descriptor	16 characters max	Tag Name	No	Yes	
Message	32 characters max	Inst Location	No	Yes	
Input					
Calibrated Range	LRV to URV in units listed in (a) below	See (b) below when not specified per S.O.	Yes	Yes	
Output					
Meas. #1 Output	4 to 20 mA or Fixed Current. Specify Poll Address (1-15) for Fixed Current.	4 to 20 mA	Yes	Yes	
Meas. #1 Mode	Linear	Linear	Yes	Yes	
Meas #1 EGUs	Select from units listed in (a) below.	Same as Calibrated Range	Yes	Yes	
Meas. #2 Mode	Linear	Linear	Yes	Yes	
Meas #2 EGUs	If linear, select from units listed in (a) below	Same as Calibrated Range	Yes	Yes	
Temp. Sensor Fail Strategy	Normal oper or fail-safe	Fail-safe	Yes		
Fail-safe	High or Low	High	Yes	Yes	
External Zero	Enabled or Disabled	Enabled	Yes	Yes	
Damping	0 to 32 seconds	None	Yes	Yes	
Poll Address	0 - 15	0	Yes	Yes	
LCD Indicator (c)	Meas #1 EGU or % Lin	Meas #1 EGU	Yes	No	

Table 7. Configurable Parameters (Continued)

Parameter	Capability	Factory Default	Configurable with		Application Requirement
			Integ. Indic.	Remote Config.	

(a) psi, inHg, ftH_2O, inH_2O, atm, bar, mbar, MPa, Pa, kPa, kg/cm^2, g/cm^2, mmHg, torr, mmH_2O

(b) Span Code C: 0 to 30 psi; Span Code D: 0 to 300 psi; Span Code E: 0 to 3000 psi; Span Code F: 0 to 6000 psi; Span Code G: 0 to 15000 psi; Span Code H: 0 to 30000 psi.

(c) Measurement #2 can be displayed at any time by pressing the **Enter** button regardless of the local display configuration. This reverts to Measurement #1 or % Lin (as configured) when power is cycled off and on.

Configuration Using a PC20

To configure the transmitter using a PC20 Configurator, follow the procedure in MI 020-495.

Configuration Using a PC50

To configure the transmitter using a PC50 Configurator, follow the procedure in MI 020-501 and MI 020-520.

Configuration Using a HART Communicator

To configure the transmitter using a HART Communicator, follow the procedure in MI 020-366.

Configuration Using the Optional Local Display

You can access the Configuration mode by the same multi-level menu system that was used to enter Calibration mode. Entry to the Mode Select menu is made (from normal operating mode) by pressing the **Next** button. The display reads **CALIB**, the first item on the menu. Press the **Next** button again to get to the second item on the menu, **CONFIG**. Acknowledge your choice of this selection by pressing the **Enter** button. The display shows the first item in the Configuration menu. You can then configure items shown in the following table. The standard factory default configuration is also given in this table.

The standard factory default configuration is not used if custom configuration option -C2 has been specified. Option -C2 is a full factory configuration of all parameters to the user's specifications.

NOTE

1. You can configure most parameters using the local display. However, for more complete configuration capability, use a HART Communicator or PC-Based configurator.

2. During configuration, a single change can affect several parameters. For this reason, if an entry is entered in error, re-examine the entire database or use the **Cancel** feature to restore the transmitter to its starting configuration and begin again.

Table 8. Configuration Menu

Item	Description	Initial Factory Configuration
POLLADR	Poll Address: 0 - 15	0
EX ZERO[a]	External Zero: enable or disable	Enable
S2 FAIL	Temperature Sensor Failure Strategy: S2FATAL or S2NOFTL	S2FATAL
OUT DIR	4 to 20 mA Output: forward or reverse	Forward
OUTFAIL	4 to 20 mA Output: fail mode output - low or high	High
OFFL MA	4 to 20 mA Output in offline mode - last or user set	USER MA
DAMPING	Damping: none, 1/4, 1/2, 1, 2, 4, 8, 16, or 32 seconds	None
M1 MODE	Output: linear or type of square root[b]	Linear
M1DISP	Local Indicator Display in linear mode: in percent or engineering units	M1EGU
M1 EGU	User-Defined Engineering Units	inH_2O or psi
M1EOFF	Offset applied to the Primary Value	0
M1 URV	Primary Upper Range Value	URL
M1 LRV	Primary Lower Range Value	0
M2 MODE	Output: linear or type of square root	Linear
M2 EGU	User-Defined Engineering Units	Same as M1 EGU
DISPLAY	Display M1, M2, or Toggle between M1 and M2	M1
CALDATE	Calibration Date	- - -
ENA PWD	Enable password; no password, configuration only, or configuration and calibration	NO PWD
CFG PWD	User set configuration password (six characters)	- - -
CAL PWD	User set calibration password (six characters)	- - -
SET GDB	Rewrite all calibration and configuration values with default values	- - -

(a) Applies only if transmitter contains External Zero option.

(b) Square root is not applicable to absolute pressure, gauge pressure, and level measurement.

Proceed to configure your transmitter by using the **Next** button to select your item and the **Enter** button to specify your selection per the following three figures. At any point in the configuration you can **Cancel** your changes and return to the on-line mode, or **Save** your changes.

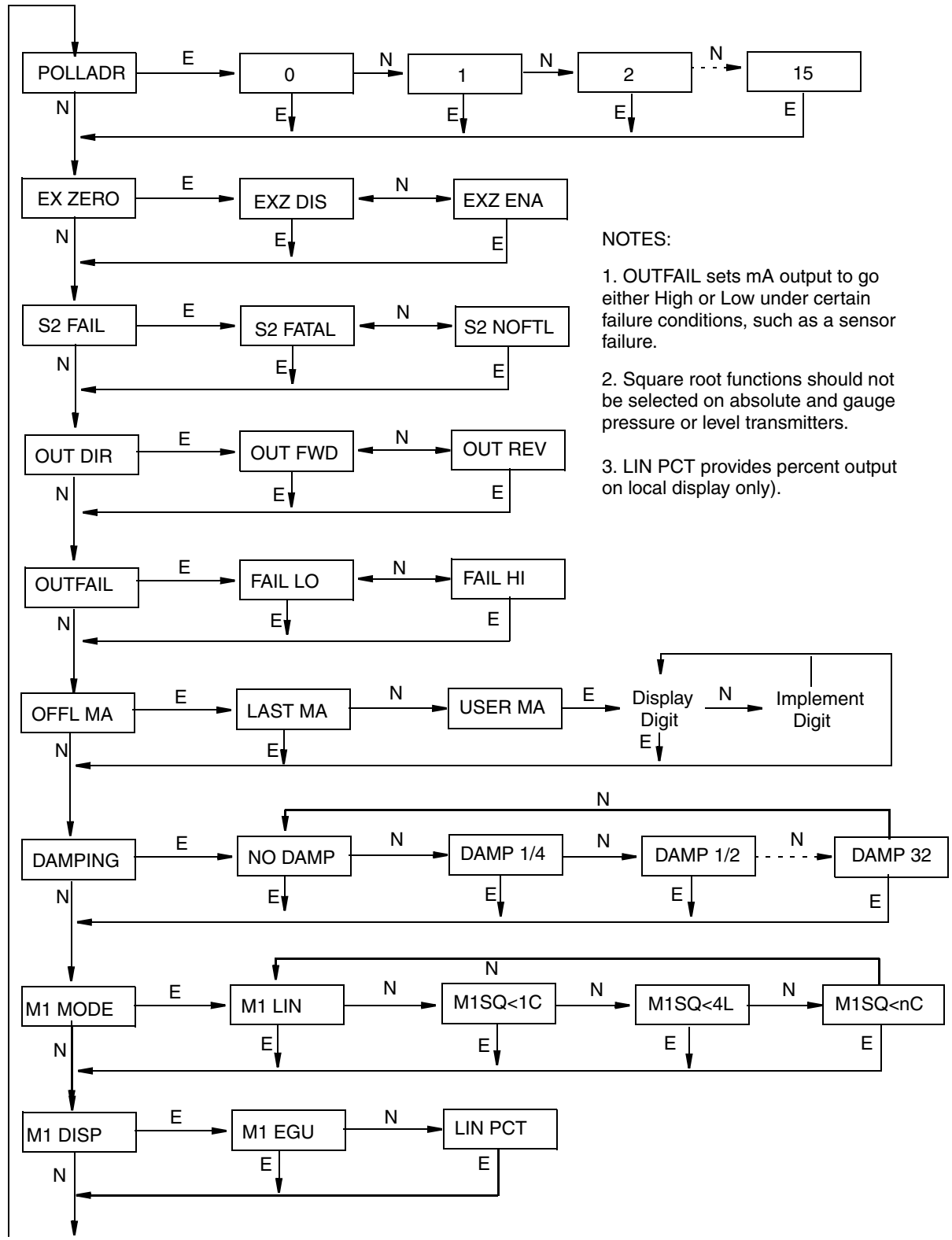

NOTES:

1. OUTFAIL sets mA output to go either High or Low under certain failure conditions, such as a sensor failure.

2. Square root functions should not be selected on absolute and gauge pressure or level transmitters.

3. LIN PCT provides percent output on local display only).

(continued on next figure)

Figure 28. Configuration Structure Diagram

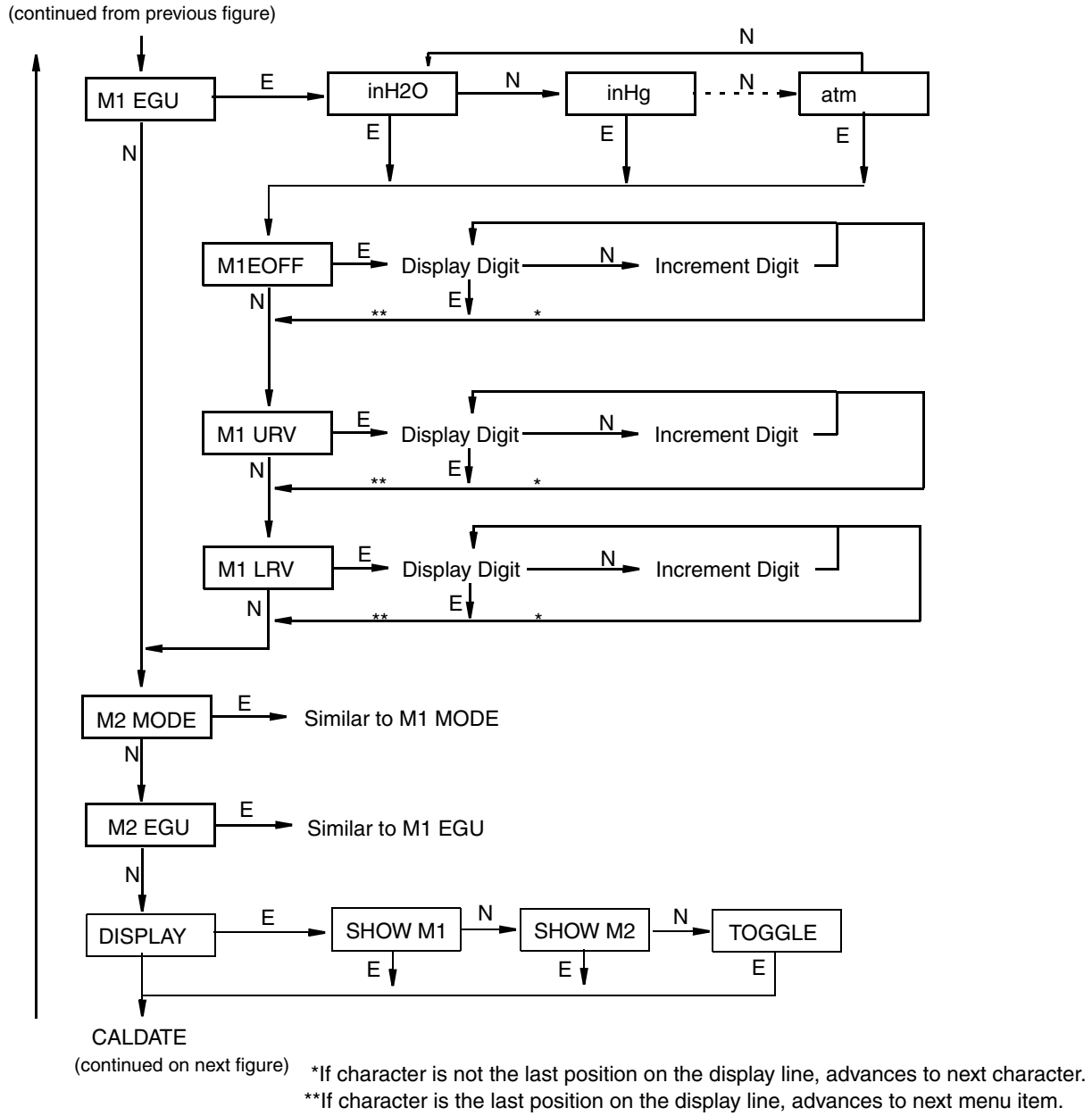

Figure 29. Configuration Structure Diagram (Continued)

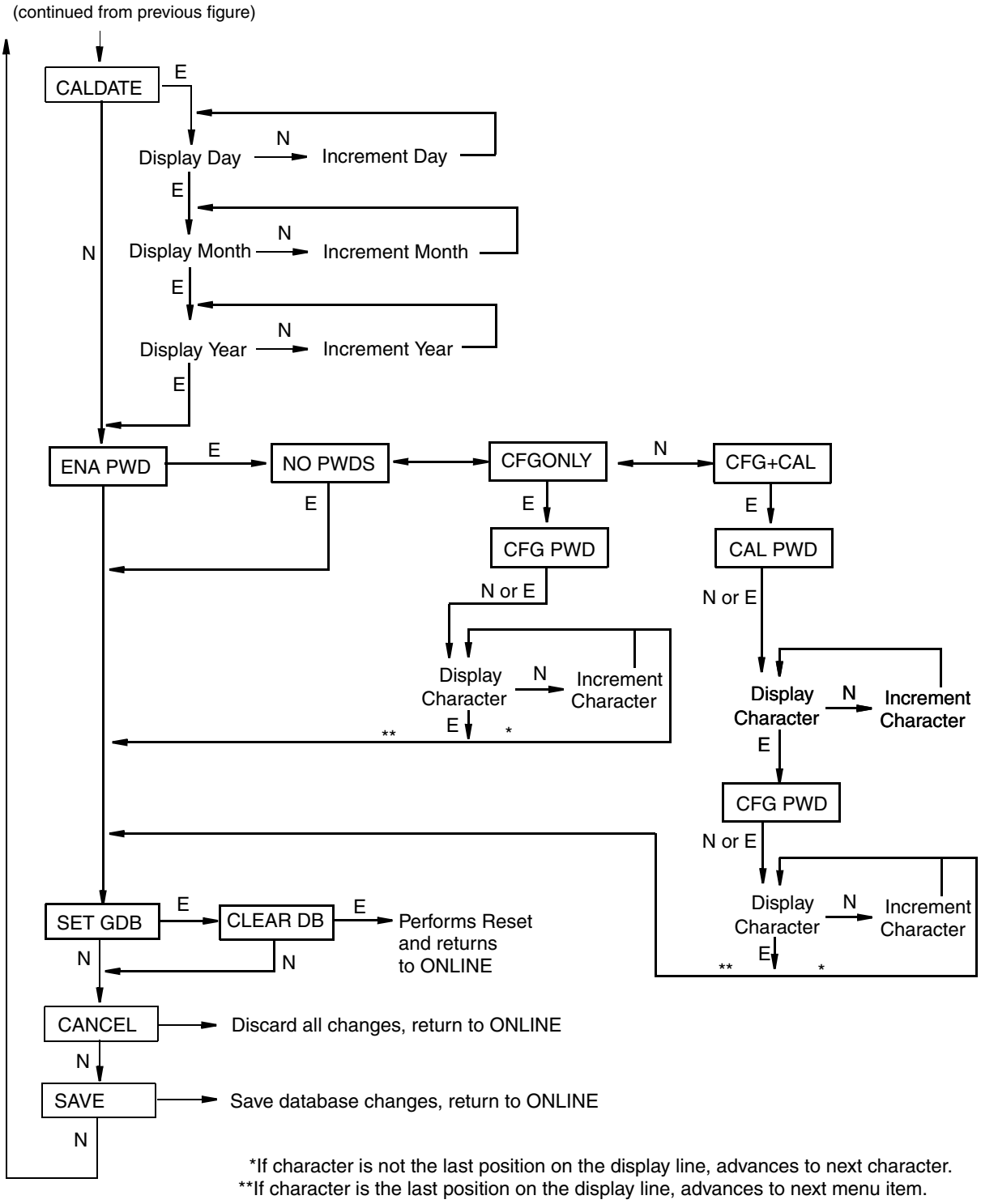

Figure 30. Configuration Structure Diagram (Continued)

Commentary on Configuration Structure Diagram

In general, use the **Next** button to select your item and the **Enter** button to specify your selection.

POLLADR:

To configure the transmitter poll address, press **Enter**. Use the **Next** button to select an address of **0** through **15**, then press **Enter**. An address of 1 through 15 is used for multidrop mode with a fixed mA output.

EX ZERO:

The External Zero feature allows the optional external zero pushbutton to be disabled for additional security. To configure this feature, go to **EX ZERO** with the **Next** button and press **Enter**. Use the **Next** button to select **EXZ DIS** or **EXZ ENA** and press **Enter**.

S2 FAIL:

The temperature sensor compensates for changes in temperature in the transmitter electronics. Failure of this sensor can cause a 4 to 20 mA accuracy change of up to 0.25%. The **S2 FAIL** feature allows you to specify action (or no action) if such a failure occurs. To configure this feature, go to **S2 FAIL** with the **Next** button and press **Enter**. Use the **Next** button to select **S2 FATAL** (to have the output go to that configured in **OUTFAIL**) or **S2 NOFTL** (to continue operation with a temperature sensor failure). This parameter has no effect if **POLLADR** is configured to any number from **1** through **15**.

OUT DIR:

To configure the Output Direction, go to **OUT DIR** with the **Next** button and press **Enter**. Use the **Next** button to select **OUT FWD** (4 - 20 mA) or **OUT REV** (20 - 4 mA) and press **Enter**. This parameter has no effect if **POLLADR** is configured to any number from **1** through **15**.

OUTFAIL:

The Outfail feature provides high or low output with certain malfunctions. To configure the fail mode output, go to **OUTFAIL** with the **Next** button and press **Enter**. Use the **Next** button to select **FAIL LO** or **FAIL HI** and press **Enter**. This parameter has no effect if **POLLADR** is configured to any number from **1** through **15**.

OFFL MA:

The Off-line mA feature enables you to set the output to a specified value or to the last value if the transmitter goes off-line. To configure the off-line output, go to **OFFL MA** with the **Next** button and press **Enter**. Use the **Next** button to select **LAST MA** or **USER MA** and press **Enter**. If you selected **USER MA**, press **Enter** again at the display of digits. Then use the **Next** button to step through the library of digits to select the desired first digit, then press **Enter**. Your selection is entered and the second character flashes. Repeat this procedure until you have entered the last digit. Then use the **Next** button to move the decimal point to its desired location and press **Enter**. The display advances to the next menu item.

DAMPING:

To configure additional damping, go to **DAMPING** with the **Next** button and press **Enter**. Use the **NEXT** button to select **NO DAMP**, **DAMP 1/4**, **DAMP 1/2**, **DAMP 1**, **DAMP 2**, **DAMP 4**, **DAMP 8**, **DAMP 16**, or **DAMP 32** and press **Enter**.

M1 MODE:

To configure the mode of the primary output, go to **M1 MODE** with the **Next** button and press **Enter**. Use the **Next** button to select **M1 LIN** and press **Enter**. **M1SQ<1C** (square root with cutoff below 1% of calibrated pressure range), **M1SQ<4L** (square root with linear below 4% of calibrated pressure range), or **M1SQ<4L** (square root with linear below 4% of calibrated pressure range), or **M1SQ<nC** (square root with user configured cutoff specified between 0 and 20% of the flow range) is not applicable to absolute or gauge pressure measurement.

M1 DISP:

To configure the optional local indicator to show engineering units or percent, go to **M1 DISP** with the **Next** button and press **Enter**. Use the **Next** button to select **M1 EGU** or **LIN PCT** and press **Enter**. **LIN PCT** only provides percent readings on the local display. The M1 engineering unit is used for remote communication of Measurement #1, even if **LIN PCT** is selected.

M1 EGU:

To configure pressure engineering units for your display and transmission, go to **M1 EGU** with the **Next** button and press **Enter**. Because **M1 MODE** is configured as **M1 LIN**, you are asked to specify one of the following pressure labels: **psi**, **inHg**, **ftH_2O**, **inH_2O**, **atm**, **bar**, **mbar**, **MPa**, **Pa**, **kPa**, **kg/cm^2**, **g/cm^2**, **mmHg**, **torr**, or **mmH_2O**. Your transmitter then automatically adjusts **M1EFAC** (engineering factor), **M1 URV** (upper range value), and **M1 LRV** (lower range value). **M1EOFF** is defaulted to zero.

M1EOFF:

You can introduce an offset by entering a nonzero value for **M1EOFF**. The offset affects the value of PV that is transmitted in engineering units, transmitted as an analog mA signal, and displayed in the (optional) local display. This feature can be used in such applications as an elevated water storage tank where the transmitter is at grade level but the output is to correspond to the level of the tank. It can also be used for a grade level water storage tank where the transmitter is installed above the bottom of the tank and the output is to correspond to the level in the tank.

M1 URV:

To edit the upper range value, press **Enter** at the prompt **M1 URV**. Use the procedure "Entering Numerical Values" on page 30 to edit this parameter.

M1 LRV:

Similar to M1URV immediately above.

M2 MODE:

M2 is a secondary measurement that is read by the Model 275 HART Communicator and can be displayed on the optional display. You might use this feature to display M1 in your primary pressure units and M2 in a different set of pressure units. To configure this parameter, go to **M2 MODE** with the **Next** button and press **Enter**. Use the next button to select **M2 LIN** and press **Enter**.

M2 EGU:

Similar to M1 EGU.

DISPLAY:

To display M1, M2, or to toggle between M1 and M2, go to **DISPLAY** with the **Next** button and press **Enter**. Use the **Next** button to select **SHOW M1**, **SHOW M2**, or **TOGGLE** and press **Enter**.

CALDATE:

This is not a required entry but can be used for record-keeping or plant maintenance purposes. To edit the calibration date, go to **CALDATE** with the **Next** button and press **Enter**. You then can change the day, month, and year. The display shows the last date with the day flashing. Use the **Next** button to step through the library of digits to select the desired day, then press **Enter**. Repeat this process for the month and year.

ENA PWD:

To enable or disable the password feature, go to **ENA PWD** with the **Next** button and press **Enter**. Use the **Next** button to select **NO PWDS** (password not required for either calibration or configuration), **CFGONLY** (password required to configure but not to calibrate), or **CFG+CAL** (passwords required to both configure and calibrate) and press **Enter**.

If you selected **CFG ONLY**, the display changes to **CFG PWD**. Press either the **Next** or **Enter** button. Use the **Next** button to step through the library of characters to select the desired first character, then press **Enter**. Your selection is entered and the second character flashes. Repeat this procedure until you have created your password. If the password has less than six characters, use blanks for the remaining spaces. When you have configured the sixth space, the display advances to the next menu item.

If you selected **CFG+CAL**, the display changes to **CAL PWD**. To create the Calibration password, press either the **Next** or **Enter** button. Use the **Next** button to step through the library of characters to select the desired first character, then press **Enter**. Your selection is entered and the second character flashes. Repeat this procedure until you have created your password. If the password has less than six characters, use blanks for the remaining spaces. When you have configured the sixth space, the display advances to **CFG PWD**. Use the same procedure to create the configuration password.

NOTE

In normal operation, the CAL PWD allows access to only calibration mode. The CFG PWD allows access to both configuration and calibration.

! CAUTION

Record your new password before saving changes to the database.

SET GDB:

If your transmitter database becomes corrupted and you receive an **INITERR** message upon startup, this function enables you to rewrite all calibration and configuration values with default values.

CAUTION

Any calibration and configuration values that you have entered will be lost. Therefore, **SET GDB** should **not** be selected if your transmitter is functioning normally.

Character Lists

Table 9. Alphanumeric Character List

Character List*	
@	‘
, (comma)	(
A-Z (uppercase)	)
[	*
\	+
]	-
^	.
_ (underscore)	/
space	0-9
!	:
“	;
#	<
$	>
%	=
&	?

*List only applies to a HART Communicator not to the optional local display.

Table 10. Numeric Character List

Character List
–
. (decimal point)
0 through 9

Error Messages

Table 11. Configuration Error Messages

Parameter	Condition Tested	Error Message	User Action
Password Protection	Password	BAD PWD	Bad password entered, use another.

Table 11. Configuration Error Messages (Continued)

Parameter	Condition Tested	Error Message	User Action
Write Protection	Write Protection Enabled	REJECT	Displays when user attempts an action that is write protected.
M1EFAC	M1EFAC < 0	-M1EFAC	Negative **M1 EFAC** is not valid. Change **M1 EFAC** to positive value.
	M1EFAC = 0	0M1EFAC	**M1 EFAC** = 0 is not valid. Change **M1 EFAC** to positive value.
M1 URV	M1URV > max pressure in EGU	URV>FMX	Entered pressure is greater than maximum rated pressure of transmitter. Check entry. Verify EGUs.
	M1URV < min pressure in EGU	URV<FMN	Entered pressure is less than minimum rated pressure of transmitter. Check entry. Verify EGUs.
	M1 URV = M1 LRV	LRV=URV	Cannot set span to 0. Check entry. Check **M1 LRV**.
	M1 turndown exceeds limit	BADTDWN	Check entry. Check **M1 LRV**.
M1 LRV	M1LRV > max pressure in EGU	LRV>FMX	Entered pressure is greater than maximum rated pressure of transmitter. Check entry. Verify EGUs.
	M1LRV < min pressure in EGU	LRV<FMN	Entered pressure is less than minimum rated pressure of transmitter. Check entry. Verify EGUs.
	M1 URV = M1 LRV	LRV=URV	Cannot set span to 0. Check entry. Check **M1 URV**.
	M1 turndown exceeds limit	BADTDWN	Check entry. Check **M1 URV**.
M2EFAC	M2EFAC < 0	-M2EFAC	Negative **M2 EFAC** is not valid. Change **M2 EFAC** to positive value.
	M2EFAC = 0	0M2EFAC	**M2 EFAC** = 0 is not valid. Change **M2 EFAC** to positive value.

6. Maintenance

DANGER

For nonintrinsically safe installations, to prevent a potential explosion in a Division 1 hazardous area, de-energize transmitters before you remove threaded housing covers. Failure to comply with this warning could result in an explosion resulting in severe injury or death.

Error Messages

For error messages displayed on the HART Communicator refer to MI 020-366.

Parts Replacement

Parts replacement is generally limited to the electronics module assembly, housing assembly, sensor assembly, terminal block assembly, cover O-rings, and optional display. For part numbers relating to the transmitter and its options, see the following parts lists:

IAP10 Absolute and IGP10 Gauge Pressure Transmitters: PL 009-006

IGP10 High Gauge Pressure: PL 009-010

Replacing the Terminal Block Assembly

1. Turn off transmitter power source.
2. Remove the Field Terminals and the Electronics compartment covers by rotating them counterclockwise. Screw in cover lock if applicable.
3. Remove the digital display (if applicable) as follows: grasp the two tabs on the display and rotate it about 10° in a counterclockwise direction.
4. Remove the electronics module from the housing by loosening the two captive screws that secure it to the housing. Then pull the module out of the housing far enough to gain access to the cable connectors on the rear of the module.
5. Remove the four socket head screws securing the terminal block.
6. Disconnect the terminal block cable connector from the electronics module.
7. Remove the terminal block and the gasket under it.
8. Connect the new terminal block cable connector to the electronics module.
9. Install the new terminal block and new gasket and reinstall the four screws to 0.67 N·m (6 in·lb) in several even increments.
10. Reinstall the electronics module (and digital display if applicable).
11. Reinstall the covers onto the housing by rotating them clockwise to seat the O-ring into the housing and then continue to hand tighten until the each cover contacts the

housing metal-to-metal. If cover locks are present, lock the cover per the procedure described in “Cover Locks” on page 23.

12. Turn on transmitter power source.

Replacing the Electronics Module Assembly

To replace the electronics module assembly, refer to Figure 31 and proceed as follows:

1. Turn off transmitter power source.
2. Remove the electronics compartment cover by rotating it counterclockwise. Screw in cover lock if applicable.
3. Remove the digital display (if applicable) as follows: grasp the two tabs on the display and rotate it about 10° in a counterclockwise direction. Pull out the display and disconnect its cable.
4. Remove the electronics module from the housing by loosening the two captive screws that secure it to the housing. Then pull the module out of the housing far enough to gain access to the cable connectors on the rear of the module.

CAUTION

The electronics module is “one assembly” at this point and is electrically and mechanically connected to topworks with a flexible ribbon signal cable, a 2-wire power cable, and in some cases, a cable for an external zero pushbutton. Do **not** exceed the slack available in these cables when removing the assembled module.

5. Unplug all cable connectors from the rear of the electronics module and place the module on a clean surface.
6. Predetermine connector orientation, then insert the cable connectors into the replacement module. Replace the module in the housing using care not to pinch the cables between the module and the housing. Tighten the two screws that secure the module to the housing.
7. Connect the cable from the digital display to the electronics module. Ensure that the O-ring is fully seated in the display housing. Then, holding the digital display by the tabs at the sides of the display, insert it into the housing. Secure the display to the housing by aligning the tabs on the sides of the assembly and rotating it about 10° in a clockwise direction.
8. Reinstall the cover onto the housing by rotating it clockwise to seat the O-ring into the housing and then continue to hand tighten until the cover contacts the housing metal-to-metal. If cover locks are present, lock the cover per the procedure described in “Cover Locks” on page 23.
9. Turn on transmitter power source.

The module replacement procedure is now complete.

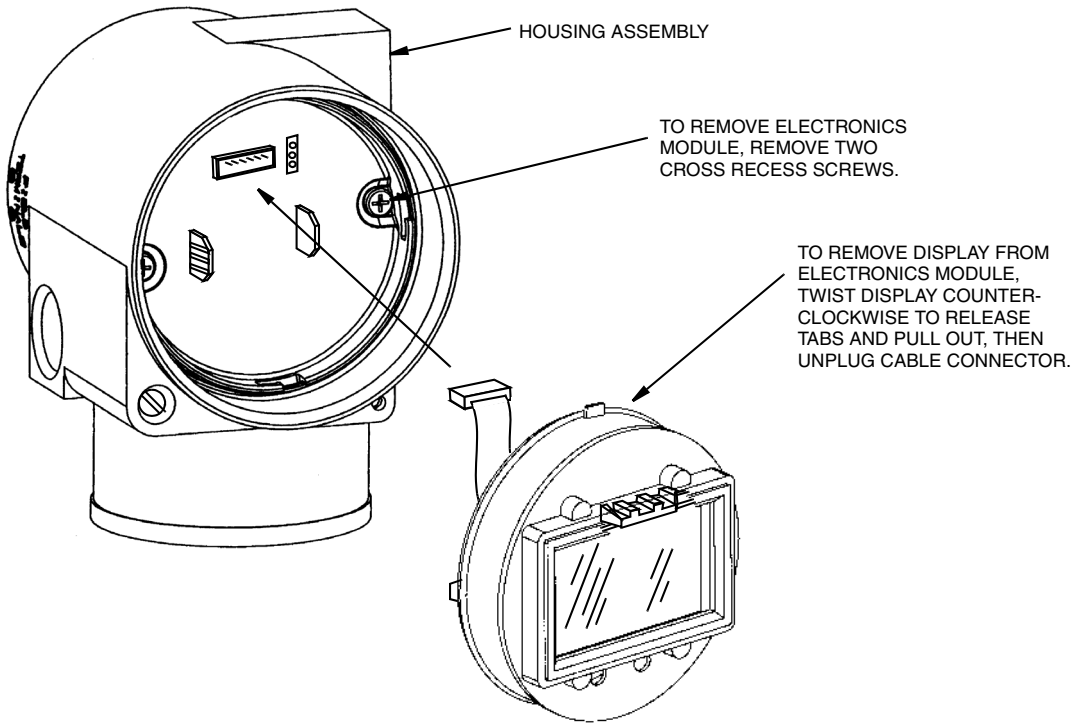

Figure 31. Replacing the Electronics Module Assembly and Display

Removing and Reinstalling a Housing Assembly

To remove and reinstall a housing assembly, refer to Figure 31 and proceed as follows:

1. Remove the electronics module per Steps 1 through 5 in the previous procedure.
2. If your housing has an anti-rotation screw, remove the red lacquer from the screw recess. Turn the screw three full turns counterclockwise.
3. If your housing has a retention clip, remove the red lacquer from the screw recess. Remove the screw completely, and slide the clip off the housing. Save the clip and screw for future use,
4. Remove the housing by rotating it counterclockwise (when viewed from the top). Use caution to avoid damaging the sensor cable.
5. Inspect the sensor O-ring for damage. If the O-ring is damaged, replace it with the appropriate O-ring. (See parts list for your transmitter). Lubricate the O-ring with silicone lubricant (Foxboro Part Number 0048130 or equivalent). Verify that the O-ring is situated in the groove of the neck.

WARNING

Failure to reuse or install the proper O-ring for a CSA labeled product violates ANSI / ISA 12.27.01.

6. Feed the sensor cable through the housing neck into the electronics compartment.
7. Screw the housing onto the sensor neck until it bottoms. Do not over tighten. Be careful not to damage the sensor cable or dislodge the neck O-ring.

8. If your housing has an anti-rotation screw, engage the screw until it touches the sensor neck and back it off 1/8th turn. It is important that the screw is not touching the sensor. Fill the screw recess with red lacquer (Foxboro Part Number X0180GS or equivalent). the housing may then be rotated up to one full turn counterclockwise for optimum access.
9. If your housing has a retention clip, insert the clip over the boss in the housing neck so that the hole in the clip is aligned with the hole in the boss. Install the screw but do not tighten. Rotate the housing up to one full turn counterclockwise for optimum access. Tighten the retention clip screw and fill the screw recess with red lacquer (Foxboro Part Number X0180GS or equivalent). The housing can still be rotated for optimum access.
10. Reinstall the electronics module per Steps 6 through 9 in the previous procedure.

Adding the Optional Display

To add the optional display, refer to Figure 31 and proceed as follows:

1. Turn off transmitter power source.
2. Remove the electronics compartment cover by rotating it counterclockwise. Screw in cover lock if applicable.
3. Plug the display into the receptacle at the top of the electronics assembly.
4. Ensure that the O-ring is seated in its groove in the display housing. Then insert the display into the electronics compartment by grasping the two tabs on the display and rotating it about 10° in a clockwise direction.
5. Install the new cover (with a window) onto the housing by rotating it clockwise to seat the O-ring into the housing and then continue to hand tighten until the cover contacts the housing metal-to-metal. If cover locks are present, lock the cover per the procedure described in “Cover Locks” on page 23.
6. Turn on transmitter power source.

Replacing the Sensor Assembly

To replace the sensor assembly, refer to Figure 31 and proceed as follows:

1. Remove the electronics module as described above.
2. Remove the housing as described above. Sensor is left.
3. Install housing on new sensor.
4. Reinstall electronics module.

Index

C

Calibration
- Using a HART Communicator 37
- Using a PC20 Configurator 37
- Using a PC50 Configurator 37
- Using the Local Display 37

Calibration Notes 33
Calibration Setup 35
Configurable Parameters 43
Configuration
- Using a HART Communicator 44
- Using a PC20 Configurator 44
- Using a PC50 Configurator 44
- Using the Local Display 44

Cover Locks 23

D

Display, Positioning the 22

E

Error Messages
- Calibration 42
- Configuration 52
- Operation 32

H

Housing, Positioning the 21

I

Identification 2
Installation 15

M

Maintenance 48, 55
Mounting 15

O

Operation 29

P
Parts Replacement 55
Piping, Typical Transmitter 20

R
Reference Documents 1
Reranging 31

S
Specifications
Product Safety 11
Standard 5

W
Wiring 23
Write Protect Jumper 22

Z
Zero Adjustment Using External Zero Button 40

ISSUE DATES
DEC 2001
OCT 2003
APR 2004
FEB 2005
FEB 2006
AUG 2006
OCT 2007
JUL 2008
MAR 2009
MAY 2010

Vertical lines to the right of text or illustrations indicate areas changed at last issue date.

Invensys Operations Management
5601 Granite Parkway Suite 1000
Plano, TX 75024
United States of America
http://www.iom.invensys.com

Global Customer Support
Inside U.S.: 1-866-746-6477
Outside U.S.:1-508-549-2424 or contact your local Invensys representative.
Email: support@invensys.com
Website: http://support.ips.invensys.com

Invensys, Foxboro, and I/A Series are trademarks of Invensys plc, its subsidiaries, and affiliates.
All other brand names may be trademarks of their respective owners.

Copyright 2001-2010 Invensys Systems, Inc.
All rights reserved

0510

Instruction

MI IAP20-T/IGP20-T
May 2010

I/A Series® Pressure Transmitters

IAP20 Absolute Pressure and IGP20 Gauge Pressure with HART Communication

Installation, Operation, Calibration, Configuration, and Maintenance

VOGT POWER INTERNATIONAL	
Released, Work May Proceed	
Hugle, Kathy	Nov-21-2011

invensys

Foxboro®

VOGT POWER INTERNATIONAL
V17460-ICXE-558-00
08-Nov-2011

Contents

Figures v

Tables vi

1. Introduction 1

General Description 1

Reference Documents 1

Transmitter Identification 2

Standard Specifications 4

Product Safety Specifications 10
- ATEX and IECEx Warnings 13
- ATEX Compliance Documents 13
- IECEx Compliance Documents 14

2. Installation 15

Transmitter Mounting 15

Typical Transmitter Piping 16

Positioning the Housing 18

Positioning the Display 19

Setting the Write Protect Jumper 19

Cover Locks 19

Wiring 20
- Accessing Transmitter Field Terminals 20
- Wiring the Transmitter to a Control Loop 21
- Multidrop Communication 24
- Connecting the Transmitter to an I/A Series System 25

3. Operation Via Local Display 27

Entering Numerical Values 28

Reranging 29

Viewing the Database 29

Viewing the Pressure Range 29

Testing the Display 29

Error Messages 30

4. Calibration 31

General Calibration Notes 31

Calibration Setup 33
Setup of Electronic Equipment 34
Field Calibration Setup 34
Bench Calibration Setup 35
Calibration Using a PC20 36
Calibration Using a PC50 36
Calibration Using a HART Communicator 36
Calibration Using the Optional Local Display 36
Zero Adjustment Using External Zero Button 39
Error Messages 41

5. Configuration 43
Configurable Parameters 43
Configuration Using a PC20 44
Configuration Using a PC50 44
Configuration Using a HART Communicator 44
Configuration Using the Optional Local Display 44
Character Lists 52
Error Messages 52

6. Maintenance 55
Error Messages 55
Parts Replacement 55
Replacing the Terminal Block Assembly 55
Replacing the Electronics Module Assembly 56
Removing and Reinstalling a Housing Assembly 57
Adding the Optional Display 58
Replacing the Sensor Assembly 58
Rotating Process Covers for Venting 60

Index 63

Figures

1 Transmitter Identification 3
2 Top Level Structure Diagram 3
3 Minimum Allowable Absolute Pressure vs. Process Temperature with Fluorinert Fill Fluid 7
4 Pipe Mounting 15
5 Surface Mounting 16
6 Typical Transmitter Piping 17
7 Hot Process Piping 18
8 Housing Screw or Clip Location 19
9 Cover Lock Location 20
10 Accessing Field Terminals 20
11 Identification of Field Terminals 21
12 Supply Voltage and Loop Load 22
13 Loop Wiring Transmitters 24
14 Wiring Several Transmitters to a Common Power Supply 24
15 Typical Multidrop Network 25
16 Local Display Module 27
17 Top Level Structure Diagram 28
18 Display Test Segment Patterns 30
19 4 to 20 mA Output Calibration Setup of Electronic Equipment 34
20 IAP20 and IGP20 Field Calibration Setup 35
21 Bench Calibration Setup 36
22 Calibration Structure Diagram 38
23 Calibration Structure Diagram (Continued) 39
24 Configuration Structure Diagram 46
25 Configuration Structure Diagram (Continued) 47
26 Configuration Structure Diagram (Continued) 48
27 Replacing the Electronics Module Assembly and Display 57
28 Replacing the Sensor Assembly 59
29 Replacing the Sensor Assembly (pvdf Inserts) 60
30 Sensor Cavity Venting and Draining 60

Tables

1 Reference Documents 1
2 Minimum Loop Load and Supply Voltage Requirements 9
3 Electrical Safety Specifications 12
4 Operation Error Messages 30
5 Calibration Menu 37
6 Calibration Error Messages 41
7 Configurable Parameters 43
8 Configuration Menu 45
9 Alphanumeric Character List 52
10 Numeric Character List 52
11 Configuration Error Messages 52

1. Introduction

General Description

The IAP20-T Intelligent Absolute Pressure and IGP20-T Intelligent Gauge Pressure Transmitters measure pressure by applying the pressure to a silicon strain gauge microsensor within the sensor assembly. This microsensor converts the pressure to a change in resistance, and the resistance change is converted to a 4 to 20 mA or digital signal proportional to the pressure. This measurement signal is transmitted to remote receivers over the same two wires that supply power to the transmitter electronics. These wires also carry two-way data signals between the transmitter and remote communication devices.

The transmitter allows direct analog connection to common receivers while still providing full Intelligent Transmitter Digital Communications using a HART Communicator.

The IAP10, IGP10 can be supplied with direct connected pressure seals; the IAP10, IGP10, IAP20, and IGP20 with remote pressure seals.

For more detailed information on the principle of operation of the transmitter, refer to document TI 037-096, available from Invensys.

Reference Documents

Table 1. Reference Documents

Document	Description
Dimensional Prints	
DP 020-342	Dimensional Print – PSFLT Pressure Seals
DP 020-343	Dimensional Print – PSFPS and PSFES Pressure Seals
DP 020-345	Dimensional Print – PSFAR Pressure Seals
DP 020-347	Dimensional Print – PSTAR Pressure Seals
DP 020-349	Dimensional Print – PSISR Pressure Seals
DP 020-351	Dimensional Print – PSSCR Pressure Seals
DP 020-353	Dimensional Print – PSSCT Pressure Seals
DP 020-354	Dimensional Print – PSSSR Pressure Seals
DP 020-355	Dimensional Print – PSSST Pressure Seals

Table 1. Reference Documents (Continued)

Document	Description
DP 020-447	Dimensional Print – IAP10 and IAP20 Absolute Pressure and IGP10, IGP20, IGP25, and IGP50 Gauge Pressure Transmitters
Parts Lists	
PL 009-007	Parts List – IAP20 Absolute and IGP20 Gauge Pressure Transmitters
Instructions	
MI 020-366	Instruction – I/A Series Intelligent Pressure Transmitters Operation, Configuration, and Calibration Using a HART Communicator
MI 020-369	Instruction – Pressure Seals
MI 020-427	Instruction – Intrinsic Safety Connection Diagrams and Nonincendive Circuits
MI 020-495	Instruction – PC20 Intelligent Transmitter Configurator
MI 020-501	Instruction – PC50 Intelligent Field Device Tool (Installation and Parts List)
MI 020-520	Instruction – PC50 Intelligent Field Device Tool with Advanced DTM Library
MI 022-138	Instruction – Bypass Manifolds - Installation and Maintenance
Technical Information	
TI 37-75b	Technical Information – Transmitter Material Selection Guide
TI 037-097	Technical Information – Process Sealing of I/A Series Pressure Transmitters for use in Class 1, Zone 0, 1, and 2 Hazardous Locations

Transmitter Identification

See Figure 1 for transmitter data plate contents. For a complete explanation of the Model Number code, see the parts list. The firmware version is identified on the top line of the display when **VIEW DB** (View Database) is selected in the top level structure (see Figure 2).

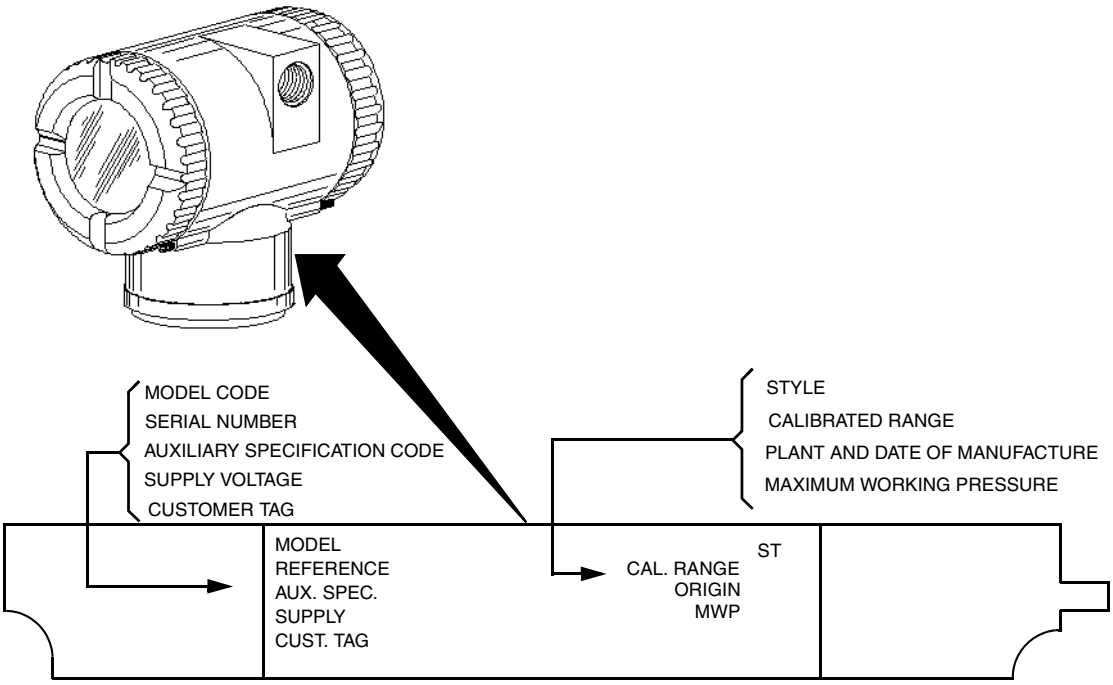

Figure 1. Transmitter Identification

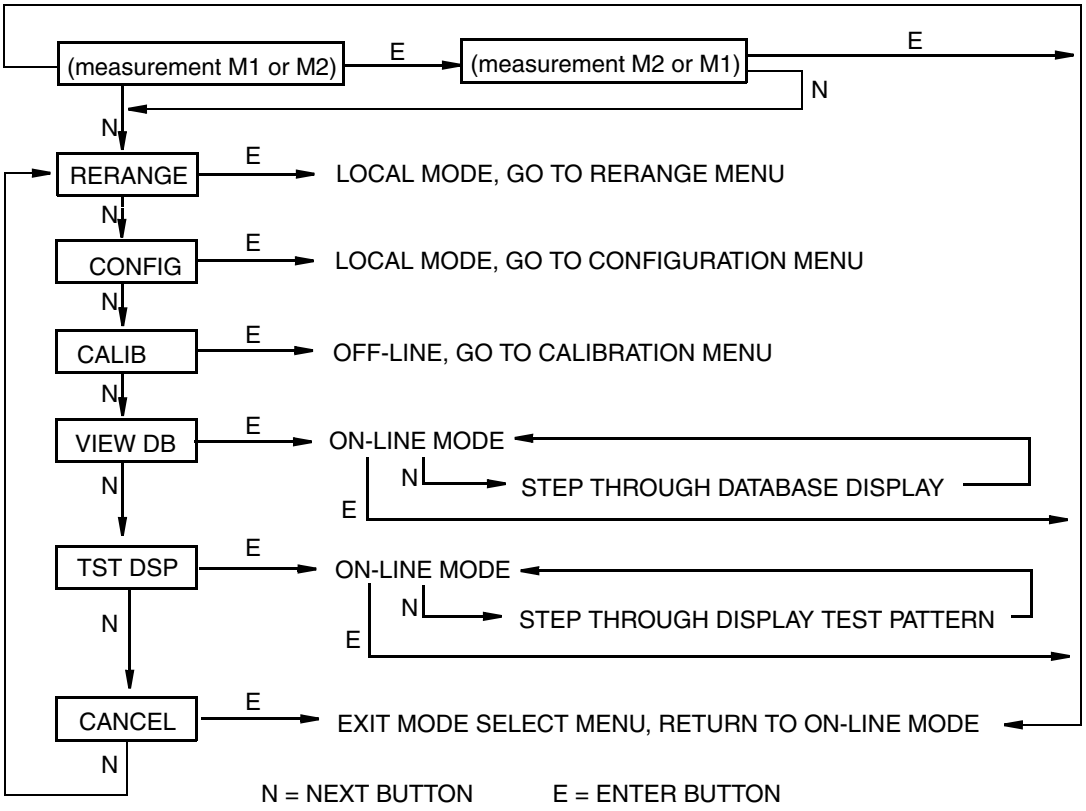

Figure 2. Top Level Structure Diagram

Standard Specifications

Operative Limits

Influence	Operative Limits
Sensor Body Temperature[a] Silicone Fill Fluid Fluorinert Fill Fluid pvdf Inserts	 -46 and +121°C (-50 and +250°F) -29 and +121°C (-20 and +250°F) -7 and +82°C (20 and 180°F)
Electronics Temperature With LCD Display	-40 and +85°C (-40 and +185°F) -40 and +85°C (-40 and +185°F)[b]
Relative Humidity	0 and 100%
Supply Voltage	11.5 and 42 V dc
Output Load[c]	0 and 1450 ohms
Mounting Position	No Limit
Vibration	6.3 mm (0.25 in) double amplitude from 5 to 15 Hz with aluminum housing and from 5 to 9 Hz with 316 ss housing. 0 to 30 m/s (0 to 3 "g") from 15 to 500 Hz with aluminum housing and 0 to 10 m/s (0 to 1 "g") from 9 to 500 Hz with 316 ss housing.

(a) Refer to MI 020-369 for temperature limits with pressure seals.

(b) Display updates are slowed and readability decreased at temperatures below -20°C (-4°F).

(c) 250 Ω minimum load is required for communication with a HART Communicator.

Span and Range Limits

Span Limit Code	Span Limits[a]	Range Limits[a]
A[b,c]	0.12 and 7.5 kPa 0.5 and 30 inH_2O 12 and 750 mmH_20	-7.5 and +7.5 kPa -30 and +30 inH_2O -750 and +750 mmH_20
B	0.87 and 50 kPa 3.5 and 200 inH_2O 87 and 5000 mmH_2O	-50 and +50 kPa -200 and +200 inH_2O -5000 and +5000 mmH_2O
C	0.007 and 0.21 MPa 28 and 840 inH_2O	-0.1 and +0.21 MPa -410 and +840 inH_2O
D	0.07 and 2.1 MPa 10 and 300 psi 23 and 690 ftH_2O	-0.1 and +2.1 MPa -14.7 and +300 psi -34 and +690 ftH_2O
E	0.7 and 21 MPa 100 and 3000 psi	-0.1 and +21 MPa -14.7 and +3000 psi
F[b]	1.38 and 34.5 MPa 200 and 5000 psi	-0.1 and 34.5 MPa -14.7 and 5000 psi

(a) Values listed are in absolute or gauge pressure units, as applicable.

(b) Applicable to IGP20 only.

(c) Not available with pressure seals.

Maximum Overrange Pressure and Proof Pressure

CAUTION

1. Exceeding the overrange pressure limit for the transmitter can cause damage to the transmitter, degrading its performance.
2. The transmitter may be nonfunctional after application of the proof pressure.

Span Limit Code	Maximum Overrange Pressure[a]	Proof Pressure[a,b]
A	25 MPa (3625 psi)	100 MPa (14500 psi)
B	25 MPa (3625 psi)	100 MPa (14500 psi)
C	25 MPa (3625 psi)	100 MPa (14500 psi)
D	25 MPa (3625 psi)	100 MPa (14500 psi)
E	31 MPa (4500 psi)	100 MPa (14500 psi)
F	52 MPa (7500 psi)	100 MPa (14500 psi)

(a) Values listed are in absolute or gauge pressure units, as applicable

(b) Meets ANSI/ISA Standard S82.03-1988.

The maximum overrange pressure and proof pressure may be different depending on the bolting material. Refer to the table below.

Transmitter Configuration (Bolting Material)[c]	Maximum Static and Overrange Pressure Rating[a,e]		Proof Pressure Rating[b]	
	MPa	Psi	MPa	Psi
Option "-B2" (17-4 PH ss), Option "-D3" or "-D7"	25	3625	100	14500
Option "B1" (316 ss) or Option "-D5"	15	2175	60	8700
Option "B3" (B7M)	20	2900	70	11150
Option "-D1"	16	2320	64	9280
Option "-D2", "-D4", "-D6", or "-D8"[d]	10	1500	40	6000
Option "D9" (17-4 PH ss)	40	5800	100	14500

Transmitter Configuration (Bolting Material)[c]	Maximum Static and Overrange Pressure Rating[a,e]		Proof Pressure Rating[b]	
	MPa	Psi	MPa	Psi

(a) Either side can be at higher pressure during overrange.

(b) Meets ANSI/ISA Standard S82.03-1988.

(c) -D1 = DIN Single ended process cover with M10 B7 bolting.
-D2 = DIN Double ended process cover with M10 B7 bolting
-D3 = DIN Single ended process cover with 7/16 in B7bolting.
-D4 = DIN Double ended process cover with 7/16 in B7bolting.
-D5 = DIN Single ended process cover with 7/16 in 316 ss bolting.
-D6 = DIN Double ended process cover with 7/16 in 316 ss bolting.
-D7 = DIN Single ended process cover with 7/16 in 17-4 ss bolting.
-D8 = DIN Double ended process cover with 7/16 in 17-4 ss bolting.
-D9 = DIN Single ended process cover with 7/16 in 17-4 ss bolting.

(d) Limited to operating temperatures ranging from 0 to 60°C (32 to 140°F).

(e) When Structure Codes 78/79 are used (pvdf insert in the Hi side process cover), the maximum overrange is 2.1 MPa (300 psi) and temperature limits are -7 and +82°C (20 and 180°F).

Elevated Zero and Suppressed Zero

For applications requiring an elevated or suppressed zero, the maximum span and the upper and lower range limits of the transmitter can not be exceeded.

Sensor Fill Fluid

Silicone Oil (DC 200) or Fluorinert (FC-43)
Neobee M-20 (for transmitters with sanitary process connection)

Minimum Allowable Absolute Pressure vs. Process Temperature

With Silicone Fill Fluid: up to 120 °C (250 °F) at full vacuum.
With Fluorinert Fill Fluid: Refer to Figure 3.

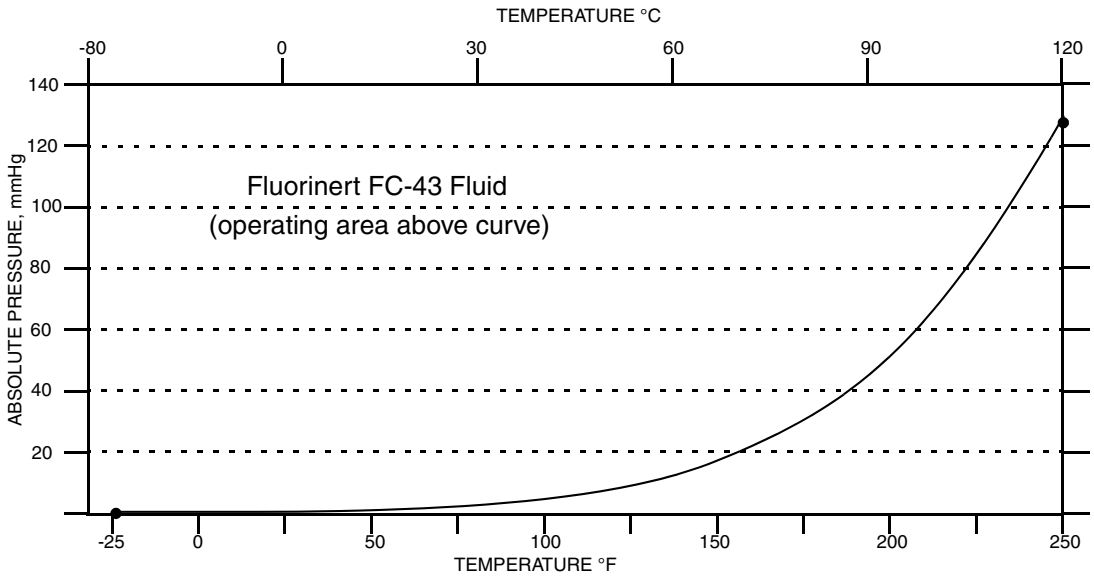

Figure 3. Minimum Allowable Absolute Pressure vs. Process Temperature with Fluorinert Fill Fluid

Mounting Position

The transmitter can be mounted in any orientation. It can be directly mounted to the process with either the direct connected or pipe mounted designs. The housing can be rotated up to one full turn to any desired position for access to adjustments, display, or conduit connections. See "Positioning the Housing" on page 18. The display (if present) can also be rotated in the housing to any of four different positions at 90° increments. See "Positioning the Display" on page 19.

NOTE

Position effect zero shift for all calibrated spans can be eliminated by readjusting zero output after installation.

Approximate Mass

IAP20, IGP20 (w/o process connector):	3.5 kg (7.8 lb)
IAP20 (with process connector):	3.8 kg (8.5 lb)
IGP20 (with process connector):	4.2 kg (9.2 lb)
With Optional 316 ss Housing:	Add 1.1 kg (2.4 lb)
With Pressure Seals:	Varies with seal used

Process Connections

IAP20 and IGP20 transmitters are connected to the process via a 1/4 NPT thread or any one of a number of optional process connectors.

Process Wetted Materials

Diaphragm:	Co-Ni-Cr, 316L ss, Hastelloy C, gold-plated 316L ss, Monel, or tantalum

Covers and Process Connectors:	316 ss, carbon steel, Hastelloy C, or Monel, or pvdf inserts
Pressure Seals:	Refer to MI 020-369
Sanitary Process Connections:	316L ss, Hastelloy C
Pulp and Paper Process Connections	316L ss, Hastelloy C

Process Pressure and Temperature Limits for Pressure Seals

Refer to MI 020-369

Electrical Connections

Field wires enter through 1/2 NPT, PG 13.5, or M20 threaded entrances on either side of the electronics housing. Leads terminate under screw terminals and washers on the terminal block in the field terminal compartment. To maintain RFI/EMI, environmental, and explosionproof ratings, unused conduit connection must be plugged with metal plug (provided), inserted to five full threads for 1/2 NPT connections; seven full threads for M20 and PG 13.5 connections.

Field Wiring Reversal

Accidental reversal of field wiring will not damage the transmitter, provided the current is limited to 1 A or less by active current limiting or loop resistance. Sustained currents of 1 A will not damage the electronics module or sensor but could damage the terminal block assembly and external instruments in the loop.

Adjustable Damping

The transmitter response time is normally 1.0 second or the electronically adjustable setting of 0.00 (none), 0.25, 0.50, 1, 2, 4, 8, 16, or 32 seconds, whichever is greater, for a 90% recovery from an 80% input step as defined in ANSI/ISA S51.1.

Output Signal

4 to 20 mA dc linear.

Zero and Span Adjustments

Zero and span are adjustable from the HART Communicator. They are also adjustable at the transmitter using the display. An optional external self-contained moisture sealed pushbutton assembly allows local resetting of zero without removing the housing cover.

Power-up Time

Less than 2.0 seconds for output to reach the first valid measurement, then at the electronic damping rate to reach the final measured variable value.

Supply Voltage

Power supply must be capable of providing 22 mA when the transmitter is configured for 4 to 20 mA output. Ripple of up to 2 V pp (50/60/100/120 Hz) is tolerable, but instantaneous voltage must remain within specified range.

The supply voltage and loop load must be within specified limits. This is explained in detail in "Wiring" on page 20. A summary of the minimum requirements is listed in Table 2.

Table 2. Minimum Loop Load and Supply Voltage Requirements

	HART Communication	No HART Communication
Minimum Resistance	250 Ω	0
Minimum Supply Voltage	17 V	11.5 V

Electrical Ground Connections

The transmitter is equipped with an internal ground connection within the field wiring compartment and an external ground connection at the base of the electronics housing. To minimize galvanic corrosion, place the wire lead or contact between the captive washer and loose washer on the external ground screw. If shielded cable is used, earth (ground) the shield at the field enclosure **only**. Do **not** ground the shield at the transmitter.

HART Communicator Connection Points

The HART Communicator can be connected in the loop as shown in "Wiring" on page 20. It can also be connected directly to the transmitter at the two upper banana plug receptacles.

Test Points

The two lower banana plug receptacles (designated **CAL**) can be used to check transmitter output when configured for 4 to 20 mA. Measurements should be 100-500 mV dc for 0-100% transmitter output.

Remote Communications

The transmitter communicates bidirectionally over the 2-wire field wiring to a HART Communicator. The information that can be continuously displayed is:

- Process Measurement (expressed in one or two types of units)
- Transmitter Temperature (sensor and electronics)
- mA Output (equivalent)

The information that can be remotely displayed and reconfigured includes:

- Output in Percent Flow (square root) or Pressure Units (linear). Percent Display in Linear mode on local display is also supported.
- Zero and Span, including reranging
- Zero Elevation or Suppression

- Linear Output or Square Root Output (in some models)
- Pressure or Flow Units (from list provided)
- Temperature Sensor Failure Strategy
- Electronic Damping
- Poll Address (Multidrop mode)
- External Zero (Enable or Disable)
- Failsafe Direction
- Tag, Description, and Message
- Date of Last Calibration

Communications Format

Communication is based upon the FSK (Frequency Shift Keying) technique. The frequencies are superimposed on the transmitter power/signal leads.

4 to 20 mA Output

The transmitter sends its differential pressure measurement to the loop as a continuous 4 to 20 mA dc signal. It also communicates digitally with the HART Communicator at distances up to 3000 m (10 000 ft). Communication between the remote configurator and the transmitter does not disturb the 4 to 20 mA output signal. Other specifications are:

Data Transmission Rate:	1200 Baud
4 - 20 mA Update Rate:	30 times/second
Output when Fail Low:	3.60 mA
Output when Fail High:	21.00 mA
Output when Underrange	3.80 mA
Output when Overrange	20.50 mA
Output when Offline:	User configurable between 4 and 20 mA

Product Safety Specifications

DANGER

To prevent possible explosions and to maintain flameproof, explosionproof, and dust-ignitionproof protection, observe applicable wiring practices. Plug unused conduit opening with the provided metal pipe plug. Both plug and conduit must engage a minimum of five full threads for 1/2 NPT connections; seven full threads for M20 and PG 13.5 connections.

WARNING

To maintain IEC IP66 and NEMA Type 4X protection, the unused conduit opening must be plugged with the metal plug provided. Use a suitable thread sealant on both conduit connections. In addition, the threaded housing covers must be installed. Turn covers to seat the O-ring into the housing and then continue to hand tighten until the cover contacts the housing metal-to-metal.

NOTE

1. These transmitters have been designed to meet the electrical safety description listed in Table 3. For detailed information or status of testing laboratory approvals/certifications, contact Invensys.
2. Wiring restrictions required to maintain electrical certification of the transmitter are provided in “Wiring” on page 20.

Table 3. Electrical Safety Specifications

Agency Certification, Types of Protection, and Area Classification	Application Conditions	Electrical Safety Design Code
ATEX flameproof: II 2 GD EEx d IIC, Zone 1.	KEMA 00ATEX2019X Temperature Class T6, T85°C, Ta = -40 to +80°C	D
ATEX intrinsically safe: II 1 GD EEx ia IIC, Zone 0.	SIRA 06ATEX2055X Temperature Class T4,Ta = -40 to +80°C	E
ATEX protection n: II 3 GD EEx nL IIC, Zone 2.	SIRA 06ATEX4056X Temperature Class T4, Ta = -40 to +80°C	N
ATEX multiple certifications, ia & ib and n. Refer to Codes E and N for details.	Applies to Codes D, E, and N.[(a)]	M
CSA intrinsically safe for Class I, Division 1, Groups A, B, C, and D; Class II, Division 1, Groups E, F, and G; Class III, Division 1. Also, Zone certified intrinsically safe Ex ia IIC and energy limited Ex nA II.	Connect per MI 020-427. Temperature Class T4A at 40°C (104°F) and T3C at 85°C (185°F) maximum ambient. Temperature Class T4 at 40°C (104°F), and T3 at 85°C (185°F) max. ambient.	C
CSA explosionproof for Class I, Division 1, Groups B, C, and D; dust-ignitionproof for Class II, Division 1, Groups E, F, and G; Class III, Division 1.	Maximum Ambient Temperature 85°C (185°F).	
CSA for Class I, Division 2, Groups A, B, C, and D; Class II, Division 2, Groups F and G; Class III, Division 2.	Temperature Class T4A at 40°C (104°F) and T3C at 85°C (185°F) maximum ambient.	
CSA field device zone certified flameproof Ex d IIC. Also, all certifications of Code C above.	Maximum Ambient Temperature 85°C (185°F).	B

Table 3. Electrical Safety Specifications (Continued)

Agency Certification, Types of Protection, and Area Classification	Application Conditions	Electrical Safety Design Code
FM intrinsically safe for Class I, Division 1, Groups A, B, C, and D; Class II, Division 1, Groups E, F, and G; Class III, Division 1. Also, Zone certified intrinsically safe AEx ia IIC.	Connect per MI 020-427. Temperature Class T4A at 40°C (104°F) and T4 at 85°C (185°F) maximum ambient. Temperature Class T4 at 85°C (185°F) maximum ambient.	F
FM explosionproof for Class I, Division 1, Groups B, C, and D; dust-ignitionproof for Class II, Division 1, Groups E, F, and G; Class III, Division 1.	Temperature Class T6 at 80°C (176°F) and T5 at 85°C (185°F) maximum ambient.	
FM nonincendive for Class I, Division 2, Groups A, B, C, and D; Class II, Division 2, Groups F and G; Class III, Division 2.	Temperature Class T4A at 40°C (104°F) and T4 at 85°C (185°F) maximum ambient.	
FM field device zone certified flameproof AEx d IIC. Also, all certifications of Code F above.	Temperature Class T6 at 75°C (167°F) maximum ambient.	G
IECEx intrinsically safe: Ex ia IIC.	IECEx SIR 06.0010X Temperature Class T4, Ta = -40 to +80°C.	T
IECEx protection n: Ex nL IIC	IECEx SIR 06.0011X Temperature Class T4, Ta = -40 to +80°C.	U
IECEx flameproof: Ex d IIC	IECEx FMG 06.0007X, Ex d IIC T6 Ta=80°C, T5 Ta=85°C Ambient Temperature -20 to +85°C	V

(a) User must permanently mark (check off in rectangular block on data plate) one type of protection only (ia and ib, d, or n). This mark cannot be changed once it is applied.

ATEX and IECEx Warnings

Do not open while circuits are alive.

ATEX Compliance Documents

EN 50014: 1997 (A1 and A2)
EN 50020: 2002
EN 50284: 1999

EN 50281-1-1: 1998
EN 60079-15: 2004

IECEx Compliance Documents

IEC 60079-0 (Edition 3.1): 2000
IEC 60079-0 (Edition 4): 2000
IEC 60079-1 (Edition 5): 2003
IEC 60079-11 (Edition 4): 1999

2. Installation

CAUTION

To avoid damage to the transmitter sensor, do not use any impact devices, such as an impact wrench or stamping device, on the transmitter.

NOTE

1. The transmitter should be mounted so that any moisture condensing or draining into the field wiring compartment can exit through one of the two threaded conduit connections.
2. Use a suitable thread sealant on all connections.

Transmitter Mounting

The IAP20 and IGP20 transmitters must be mounted to a vertical or horizontal pipe or a surface using the mounting set. See Figures 4 and 5. For dimensional information, refer to DP 020-447.

NOTE

1. If the transmitter is not installed in the vertical position, readjust the zero output to eliminate the position zero effect. Be aware that an absolute pressure transmitter cannot be zeroed by venting the transmitter to atmosphere.
2. The lower conduit port can be used as a drain for moisture buildup in terminal compartment.

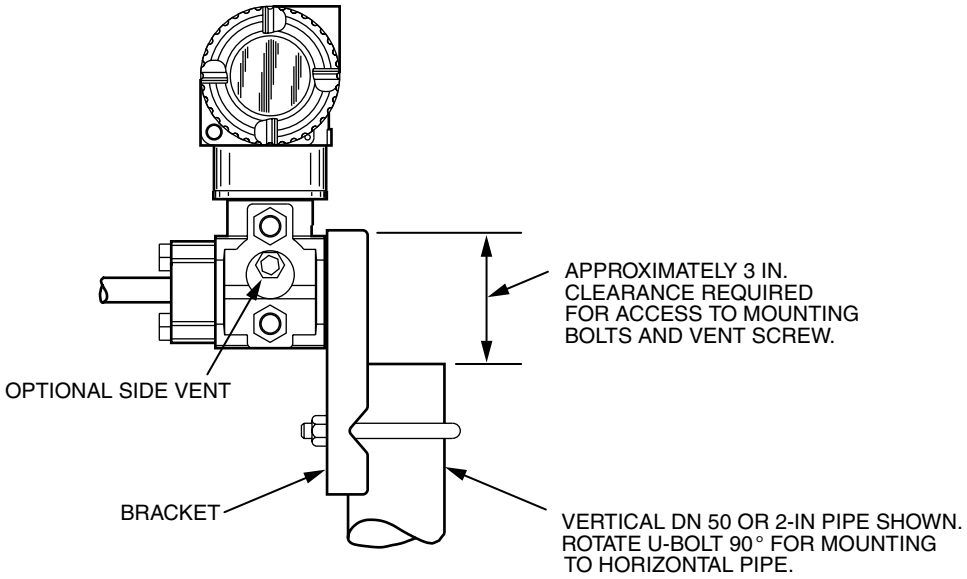

Figure 4. Pipe Mounting

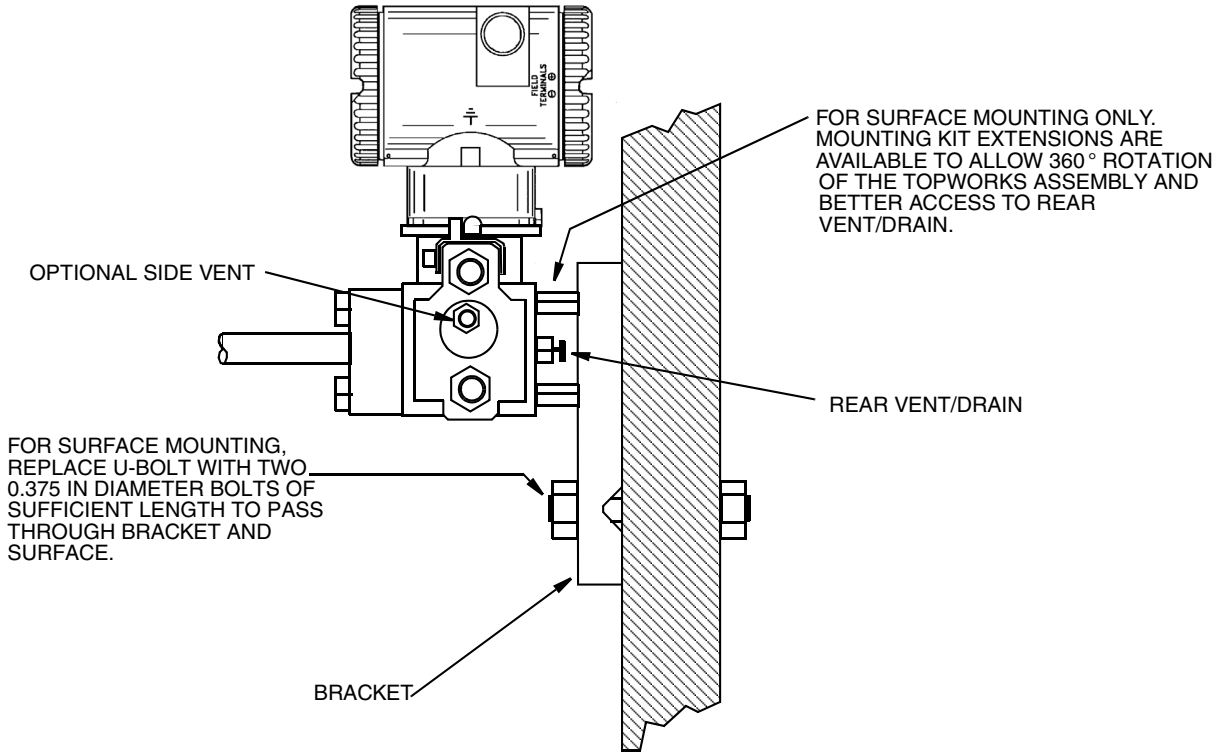

Figure 5. Surface Mounting

Typical Transmitter Piping

Figure 6 shows a typical piping application. Tighten the process connector bolts to a torque of 61 N·m (45 lb·ft) and drain plugs and vent screws to a torque of 20 N·m (15 lb·ft).

NOTE

1. Invensys recommends the use of snubbers in installations prone to high levels of fluid pulsations.
2. When structure codes 78/79 (pvdf insert) are used on an IAP20, the process connection must be made directly to the pvdf insert in the high side process cover.

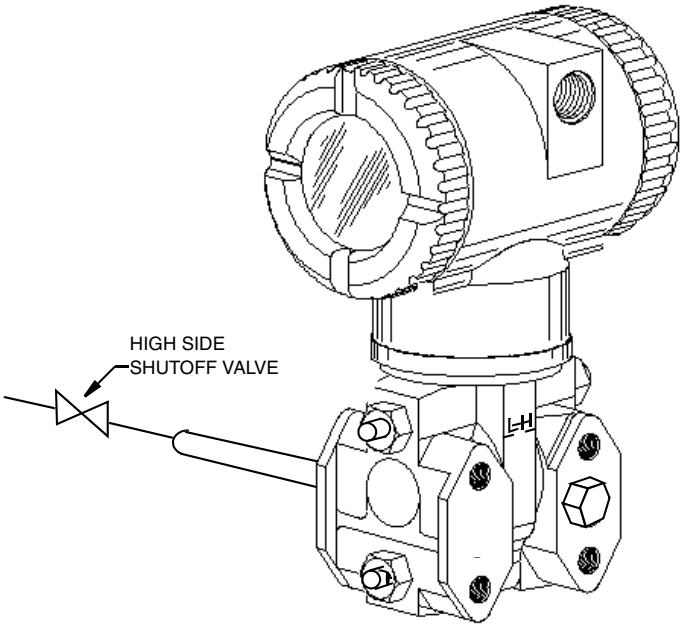

Figure 6. Typical Transmitter Piping

For hot process applications above the operative limits of your transmitter [121°C (250°F) for silicone fill fluid or 82°C (180°F) for fluorinert fill fluid], such as steam, additional piping is required to protect the transmitter from the hot process. See Figure 7. The piping is filled with water or process fluid. Mount the transmitter below the pressure connection at the pipe. Although the transmitter is shown mounted vertically, you can also mount it horizontally. The calibration tee is not required if a calibration screw is used for field calibrations.

If trapped vapor pockets cannot be tolerated in a liquid service and a horizontal process connection is used, install a pipe elbow and vertically position the transmitter with the housing **below** the process connection.

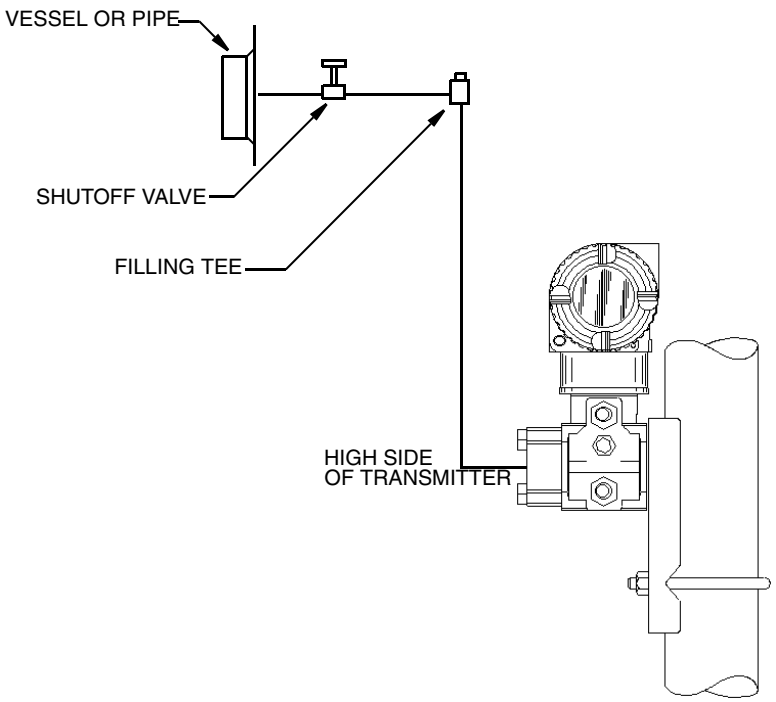

Figure 7. Hot Process Piping

Positioning the Housing

The transmitter housing (topworks) can be rotated up to one full turn in the counterclockwise direction when viewed from above for optimum access to adjustments, display, or conduit connections. Housings have either an anti-rotation screw or a retention clip that prevent the housing from being rotated beyond a safe depth of housing/sensor thread engagement.

WARNING

If the electronics housing is removed for maintenance, it must be hand tightened to the bottom of the threads, but not over-tightened upon reassembly. See “Removing and Reinstalling a Housing Assembly” on page 57.

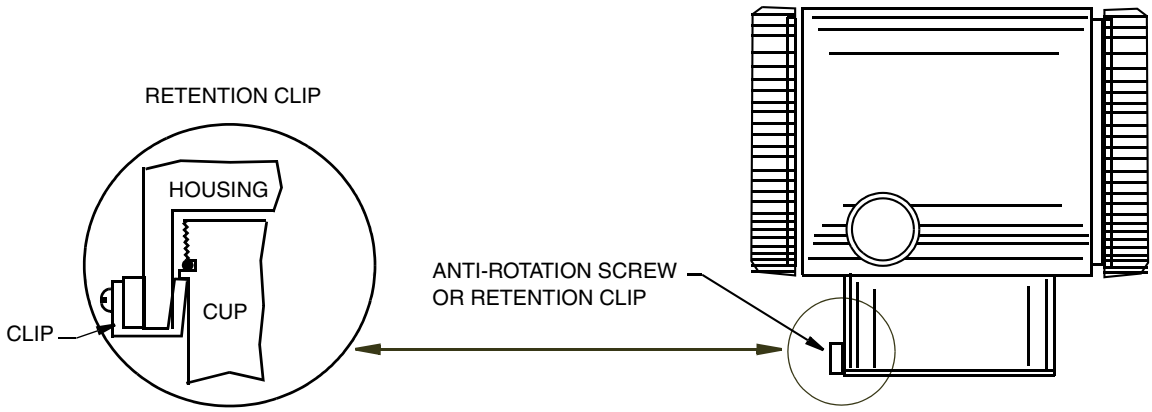

Figure 8. Housing Screw or Clip Location

Positioning the Display

The display (optional in some models) can be rotated within the housing to any of four positions at 90° increments. To do this, grasp the two tabs on the display and rotate it about 10° in a counterclockwise direction. Pull out the display. Ensure that the O-ring is fully seated in its groove in the display housing. Turn the display to the desired position, reinsert it in the electronics module, aligning the tabs on the sides of the assembly, and twist it in the clockwise direction.

CAUTION

Do **not** turn the display more than 180° in any direction. Doing so could damage its connecting cable.

Setting the Write Protect Jumper

Your transmitter has write protection capability. This means that the external zero, local display, and remote communications can be prevented from writing to the electronics. Write protection is set by moving a jumper that is located in the electronics compartment behind the optional display. To activate write protection, remove the display as described in the previous section, then remove the jumper or move it to the lower position as shown on the exposed label. Replace the display.

Cover Locks

Electronic housing cover locks, shown in Figure 9, are provided as standard with certain agency certifications and as part of the Custody Transfer Lock and Seal option. To lock the covers, unscrew the locking pin until approximately 6 mm (0.25 in) shows, lining up the hole in the pin with the hole in the housing. Insert the seal wire through the two holes, slide the seal onto the wire ends and crimp the seal

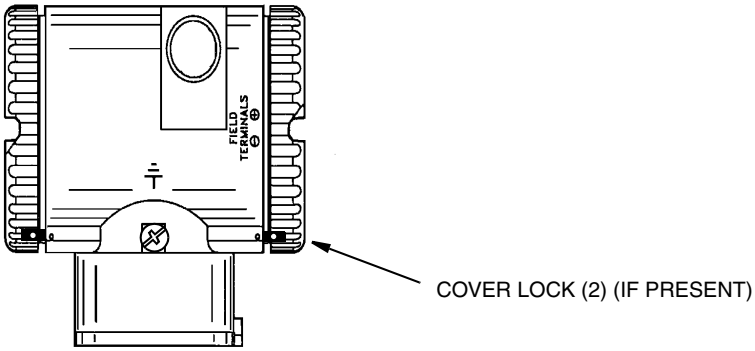

Figure 9. Cover Lock Location

Wiring

The installation and wiring of your transmitter must conform to local code requirements.

WARNING

ATEX requires that when the equipment is intended to be used in an explosive atmosphere caused by the presence of combustible dust, cable entry devices and blanking elements shall provide a degree of ingress protection of at least IP6X. They shall be suitable for the conditions of use and correctly installed.

NOTE

Invensys recommends the use of transient/surge protection in installations prone to high levels of electrical transients and surges.

Accessing Transmitter Field Terminals

For access to the field terminals, thread the cover lock (if present) into the housing to clear the threaded cover and remove the cover from the field terminals compartment as shown in Figure 10. Note that the embossed letters **FIELD TERMINALS** identify the proper compartment.

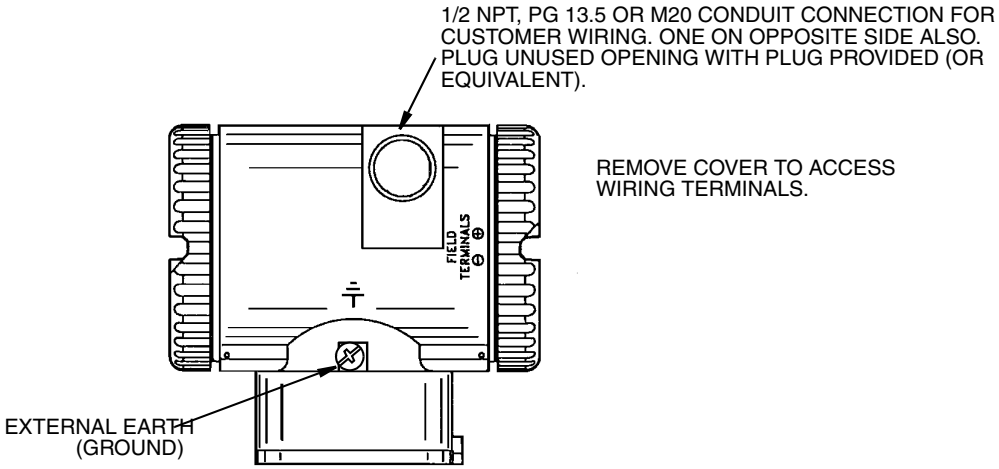

Figure 10. Accessing Field Terminals

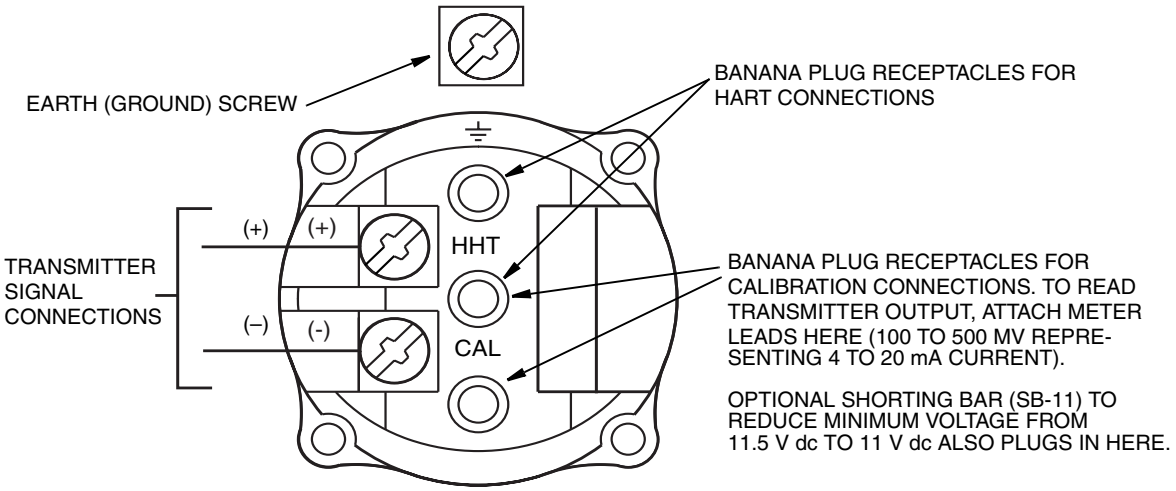

Figure 11. Identification of Field Terminals

Wiring the Transmitter to a Control Loop

When wiring the transmitter, the supply voltage and loop load must be within specified limits. The supply output load vs. voltage relationship is:

R_{MAX} = 47.5 (V - 11.5) and is shown in Figure 12.

NOTE

The relationship when the optional shorting bar is used is:

R_{MAX} = 46.8 (V - 11).

Any combination of supply voltage and loop load resistance in the shaded area can be used. To determine the loop load resistance (transmitter output load), add the series resistance of each component in the loop, excluding the transmitter. The power supply must be capable of supplying 22 mA of loop current.

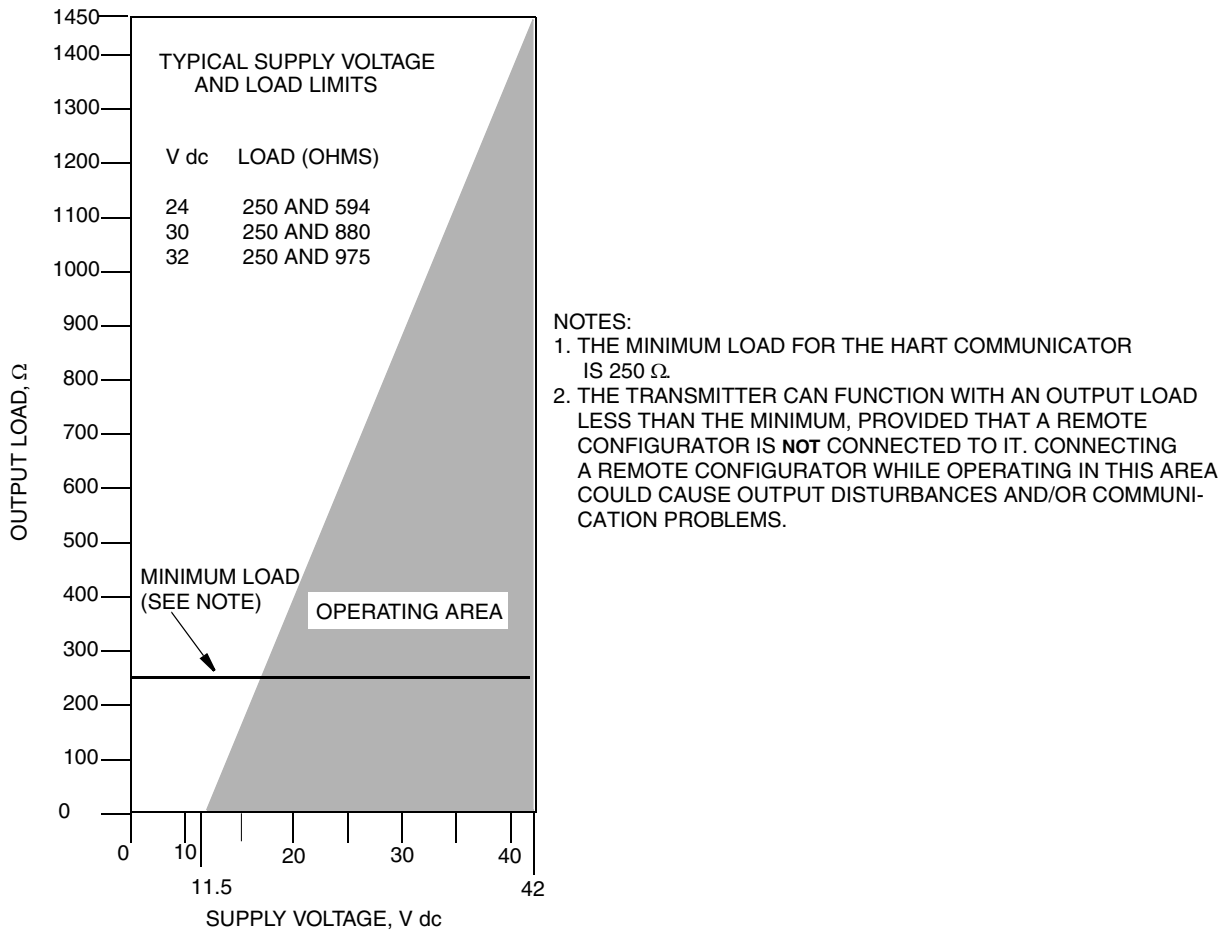

Figure 12. Supply Voltage and Loop Load

Examples:

1. For a loop load resistance of 880 Ω, the supply voltage can be any value from 30 to 42 V dc.
2. For a supply voltage of 24 V dc, the loop load resistance can be any value from 250 to 594 Ω (zero to 594 Ω without a HART Communicator or PC-Based Configurator connected to the transmitter).

To wire one or more transmitters to a power supply, proceed with the following steps.

1. Remove the cover from the transmitter field terminals compartment.
2. Run signal wires (0.50 mm^2 or 20 AWG, typical) through one of the transmitter conduit connections. Use twisted single pair to protect the 4 to 20 mA output and/or remote communications from electrical noise. Maximum recommended length for signal wires is:
   - 3050 m (10,000 ft) **using single pair cable** and adhering to requirements of HART physical layer implementation defined in HART Document HCF_SPEC-53. Use CN=1 when calculating max. lengths.
   - 1525 m (5000 ft) in a multidrop (15 devices maximum) mode. Screened (shielded) cable could be required in some locations.

NOTE

Do not run transmitter wires in same conduit as mains (ac power) wires.

3. If shielded cable is used, earth (ground) the shield at the power supply **only**. Do not ground the shield at the transmitter.
4. Plug unused conduit connection with the 1/2 NPT, PG 13.5 or M20 metal plug provided (or equivalent). To maintain specified explosionproof and dust-ignitionproof protection, plug must engage a **minimum** of five full threads for 1/2 NPT connections; seven full threads for M20 and PG 13.5 connections.
5. Connect an earth (ground) wire to the earth terminal in accordance with local practice.

! CAUTION

If the signal circuit must be earthed (grounded), it is preferable to do so at the negative terminal of the dc power supply. To avoid errors resulting from earth loops or the possibility of short-circuiting groups of instruments in a loop, there should be only one earth in a loop.

6. Connect the power supply and receiver loop wires to the "+" and "–" terminal connections.
7. Connect receivers (such as controllers, recorders, indicators) in series with power supply and transmitter as shown in Figure 13.
8. Reinstall the cover onto the housing by rotating it clockwise to seat the O-ring into the housing and then continue to hand tighten until the cover contacts the housing metal-to-metal. If cover locks are present, lock the cover per the procedure described in "Cover Locks" on page 19.
9. If wiring additional transmitters to the same power supply, repeat Steps 1 through 8 for each additional transmitter. The setup with multiple transmitters connected to a single power supply is shown in Figure 14.
10. A HART Communicator or PC-Based Configurator can be connected in the loop between the transmitter and the power supply as shown in Figures 13 and 14. Note that a minimum of 250 Ω must separate the power supply from the HART Communicator or PC-Based Configurator.

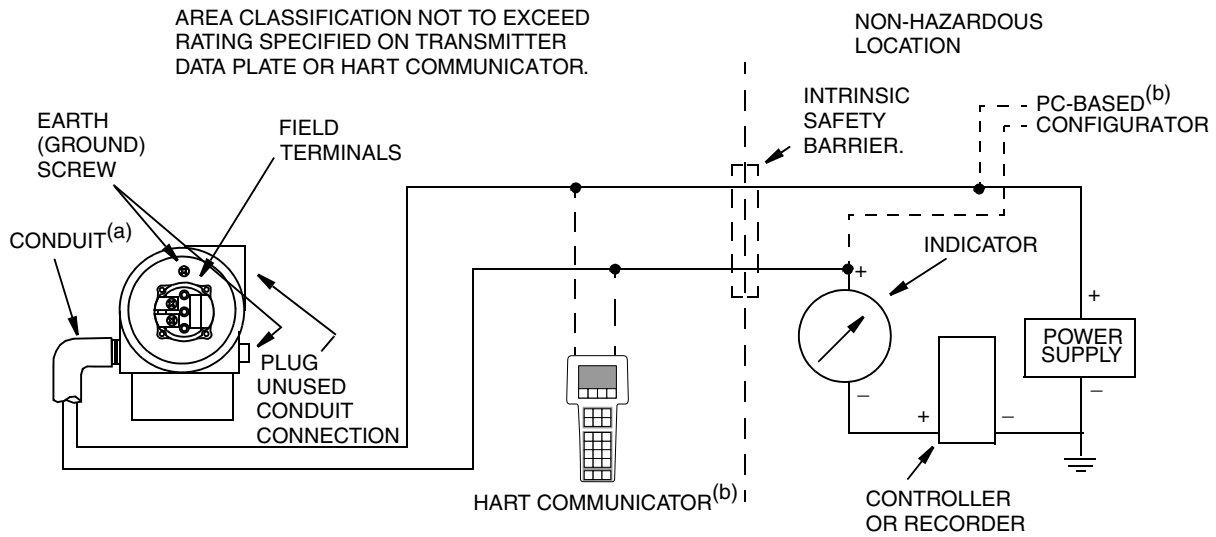

(a) RUN CONDUIT DOWN TO AVOID MOISTURE BUILDUP IN TERMINALS COMPARTMENT.
(b) THERE MUST BE AT LEAST 250 Ω TOTAL RESISTANCE BETWEEN THE HART COMMUNICATOR OR PC-BASED CONFIGURATOR AND THE POWER SUPPLY.

Figure 13. Loop Wiring Transmitters

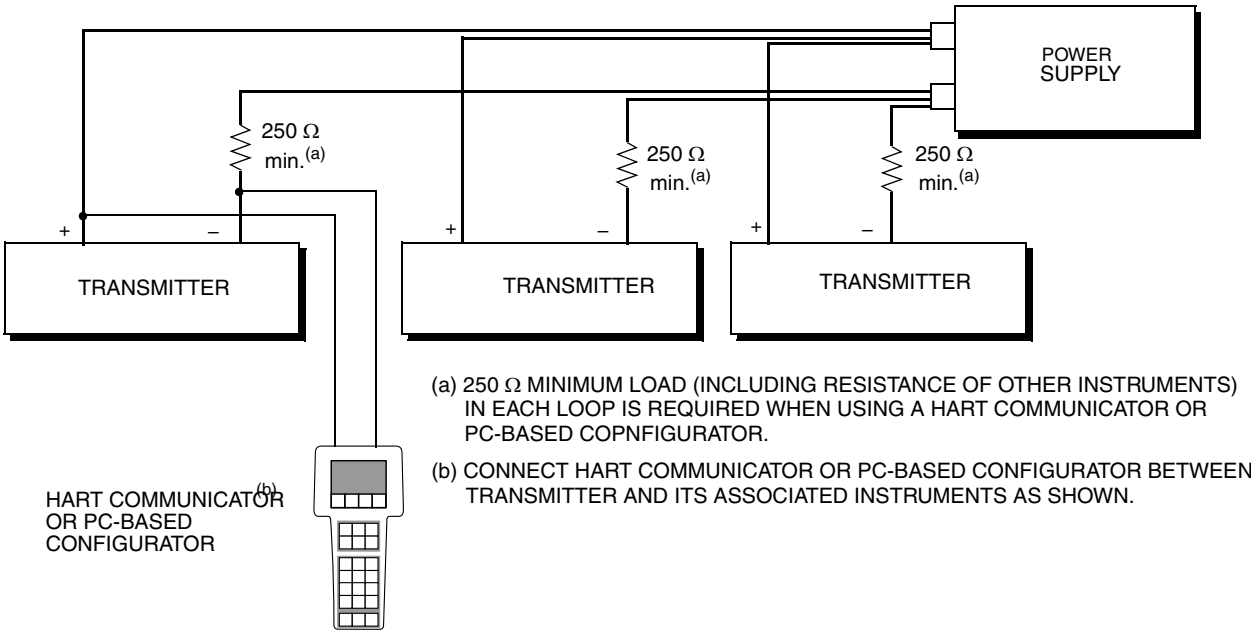

(a) 250 Ω MINIMUM LOAD (INCLUDING RESISTANCE OF OTHER INSTRUMENTS) IN EACH LOOP IS REQUIRED WHEN USING A HART COMMUNICATOR OR PC-BASED COPNFIGURATOR.

(b) CONNECT HART COMMUNICATOR OR PC-BASED CONFIGURATOR BETWEEN TRANSMITTER AND ITS ASSOCIATED INSTRUMENTS AS SHOWN.

Figure 14. Wiring Several Transmitters to a Common Power Supply

Multidrop Communication

"Multidropping" refers to the connection of several transmitters to a single communications transmission line. Communications between the host computer and the transmitters takes place digitally with the analog output of the transmitter deactivated. With the HART communications

protocol, up to 15 transmitters can be connected on a single twisted pair of wires or over leased telephone lines.

The application of a multidrop installation requires consideration of the update rate necessary from each transmitter, the combination of transmitter models, and the length of the transmission line. Multidrop installations are not recommended where Intrinsic Safety is a requirement. Communication with the transmitters can be accomplished with any HART compatible modem and a host implementing the HART protocol. Each transmitter is identified by a unique address (1-15) and responds to the commands defined in the HART protocol.

Figure 15 shows a typical multidrop network. Do not use this figure as an installation diagram. Contact the HART Communications Foundation, (512) 794-0369, with specific requirements for multidrop applications.

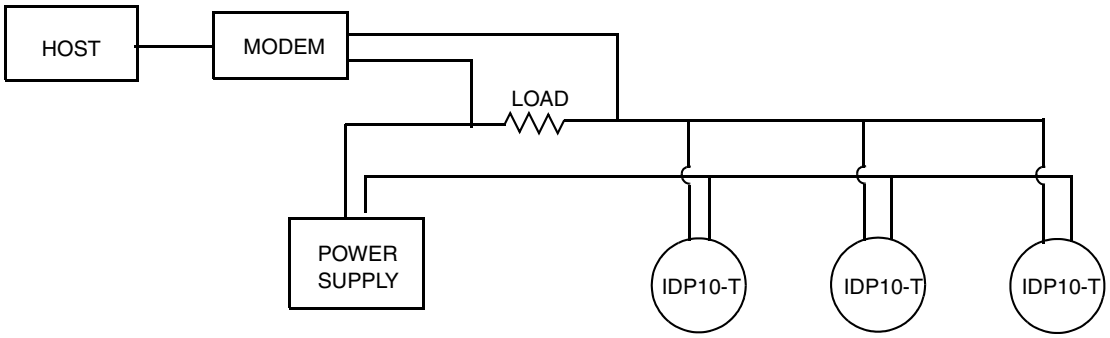

Figure 15. Typical Multidrop Network

The HART Communicator can operate, configure, and calibrate IASPT transmitters with HART communication protocol in the same way as it can in a standard point-to-point installation.

NOTE

IASPT transmitters with HART communication protocol are set to poll address 0 (**POLLADR 0**) at the factory, allowing them to operate in the standard point-to-point manner with a 4 to 20 mA output signal. To activate multidrop communication, the transmitter address must be changed to a number from 1 to 15. Each transmitter must be assigned a unique number on each multidrop network. This change deactivates the 4 to 20 mA analog output.

Connecting the Transmitter to an I/A Series System

The transmitter can also send its measurement to an I/A Series system as a digital signal via an FBM214/215. Wiring terminations at the transmitter are the same as described above. For other system wiring details, refer to the installation instructions provided with the I/A Series system.

3. Operation Via Local Display

A local display, as shown in Figure 16, has two lines of information. The upper line is a 5-digit numeric display (4-digit when a minus sign is needed); the lower line is a 7-digit alphanumeric display. The display provides local indication of measurement information.

The display can be configured to meet your specific needs. If configured **Show 1**, M1 is displayed. If configured **Show 2**, M2 is displayed. To temporarily view the alternate measurement, press the **Enter** button. After showing this measurement for a brief period, the display reverts to the configured display. If configured **Toggle**, the display toggles between M1 and M2. When M2 is displayed, an M2 message blinks in the lower right of the display.

The display also provides a means for performing calibration and configuration, viewing the database, testing the display, and reranging the transmitter via the 2-button keypad. You can access these operations by means of a multi-level menu system. Entry to the Mode Select menu is made (from normal operating mode) by pressing the **Next** button. You can exit this menu, restore your prior calibration or configuration, and return to the normal operating mode at any time by going to **Cancel** and pressing the **Enter** button.

The top level structure diagram is shown in Figure 17.

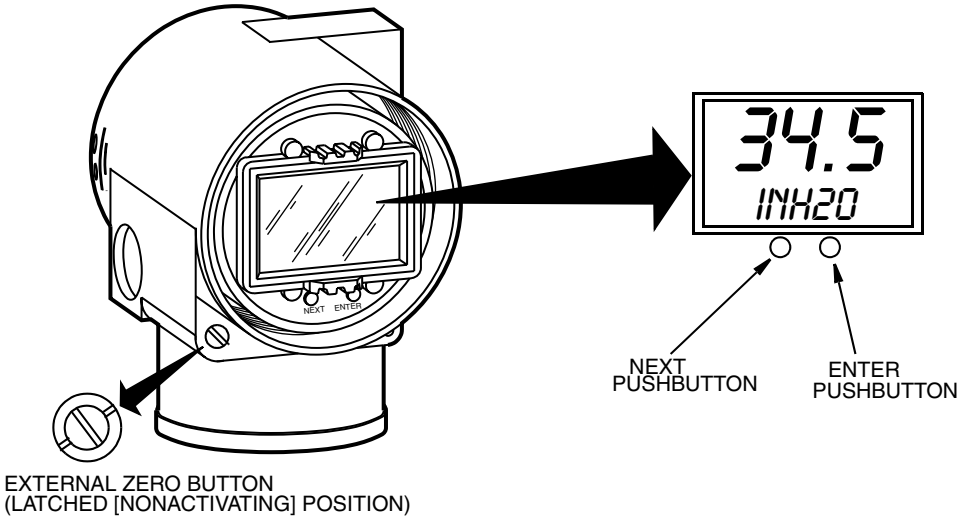

Figure 16. Local Display Module

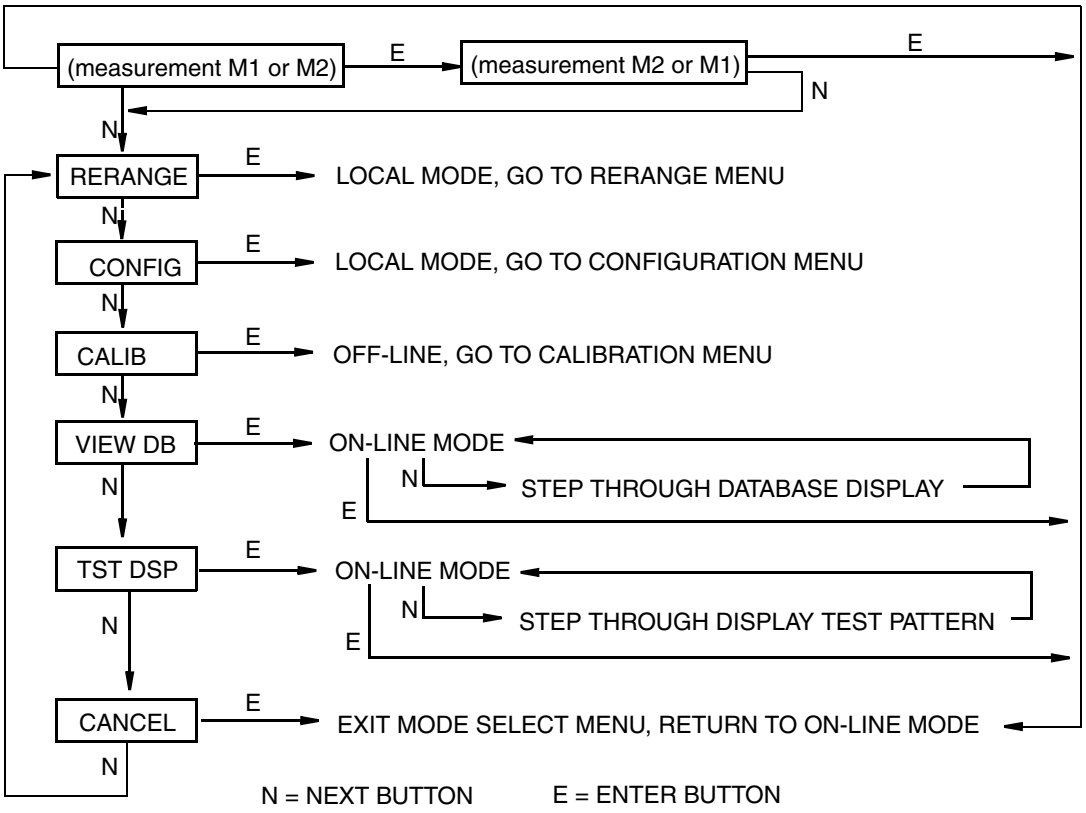

Figure 17. Top Level Structure Diagram

Entering Numerical Values

The general procedure for entering numerical values in Calibration and Configuration is as follows:

1. At the appropriate prompt, press the **Enter** button. The display shows the last (or default) value with the first digit flashing.
2. Use the **Next** button to select the desired first digit, then press the **Enter** button. Your selection is entered and the second digit flashes.
3. Repeat Step 2 until you have created your new value. If the number has less than five characters, use leading or trailing zeros for the remaining spaces. When you have configured the fifth space, the display prompts you to place the decimal point.
4. Move the decimal point with the **Next** button until it is where you want it and press the **Enter** button.

— NOTE

1. The decimal point may not be placed directly after the first digit. For example, you can not enter a value as 1.2300; you must enter it as 01.230.
2. The decimal position is identified by flashing except at the position after the fifth digit. At that position (representing a whole number), the decimal point is assumed.

5. The display advances to the next menu item.

Reranging

You can access the Rerange mode in the top level menu (see Figure 17). Entry to the Mode Select menu is made (from normal operating mode) by pressing the **Next** button. The display reads **RERANGE**. You can then adjust **M1 URV** and/or **M1 LRV** in the following two submenus.

M1 URV:

To edit the upper range value, press **Enter** at the prompt **M1 URV**. Use the procedure "Entering Numerical Values" on page 28 section to edit this parameter.

M1 LRV:

Similar to **M1URV** immediately above.

Viewing the Database

You can access the View Database mode by the multi-level menu system described above. Entry to the Mode Select menu is made (from normal operating mode) by pressing the **Next** button. The display reads **RERANGE**. Use the **Next** button to get to **VIEW DB**. Acknowledge your choice of this selection by pressing the **Enter** button. The display shows the first item in the database. You can step through the database display by repeated use of the **Next** button. You can abort this procedure at any time by pressing the **Enter** button.

Viewing the Pressure Range

The values of M1LRV and M1 URV can be viewed in VIEW DB as described above.

Testing the Display

You can access the Test Display mode by the same multi-level menu system that was used to enter Reranging, Calibration, Configuration, and View Database mode. Entry to the Mode Select menu is made (from normal operating mode) by pressing the **Next** button. The display reads **RERANGE**. Use the **Next** button to get to **TST DSP**. Acknowledge your choice of this selection by pressing the **Enter** button. The display shows the first test segment pattern. You can step through the five patterns by repeated use of the **Next** button. You can abort the test at any time by pressing the **Enter** button. The five patterns are shown in Figure 18.

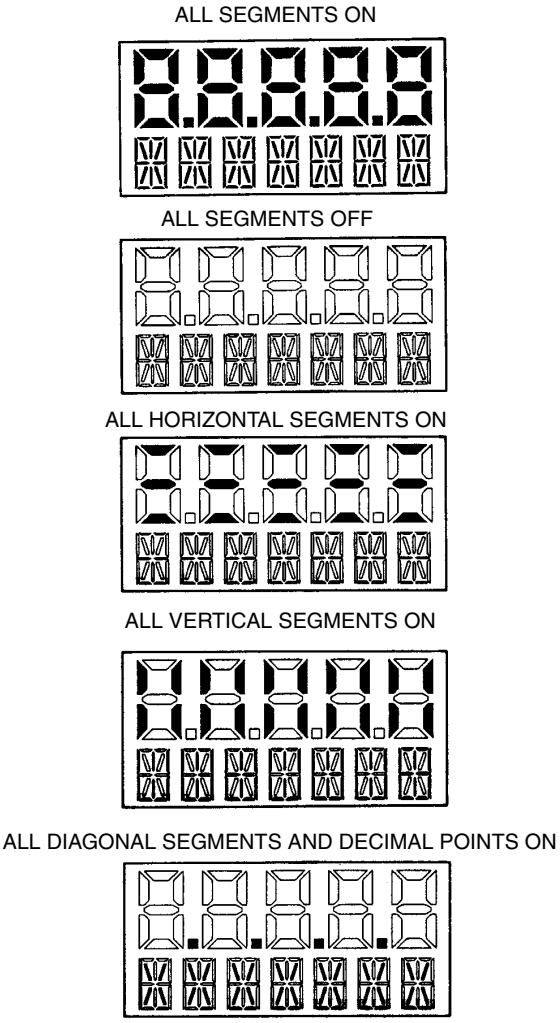

Figure 18. Display Test Segment Patterns

Error Messages

Table 4. Operation Error Messages

Parameter	Condition Tested	Error Message	Action
Normal Operation	Write Protection Enabled	WR PROT	Displays periodically to notify user that unit is in Write Protect.
	Any non-On-line Condition	OFFLINE	Notifies user of a non-On-line condition.
Startup	Database OK or corrupted	INITERR	User should perform SET GDB procedure.

4. Calibration

NOTE

1. For best results in applications where high accuracy is required, rezero the transmitter output once it has stabilized at the final operating temperature.
2. Zero shifts resulting from position effects and/or static pressure effects can be eliminated by rezeroing the transmitter output.
3. After calibrating transmitters operating with a 4 to 20 mA (or 1 to 5 V dc) output signal, check the underrange and overrange output values to ensure that they extend beyond 4 and 20 mA (or 1 and 5 V dc) respectively.

General Calibration Notes

1. Each transmitter is factory characterized over its full rated pressure range. One benefit of this process is that every transmitter can measure any applied pressure within its range limits regardless of the calibrated range. The applied pressure is measured and converted into an internal digital value of pressure. This digital value of pressure is always available whether the transmitter is calibrated or not. Calibration assures that the transmitter rated accuracy is achieved over the calibrated range.
2. The internal digital value of pressure can be displayed on the optional local display, transmitted digitally, and converted to a 4 to 20 mA analog output signal.
3. Each transmitter is factory calibrated to either a specified or a default calibrated range. This calibration optimizes the accuracy of the internal digital value of pressure over that range. If no range is specified, the default range is zero to the sensor upper range limit (URL).
4. The transmitter database has configurable values for both lower range value (LRV) and upper range value (URV). These values are used for two functions.
   a. Defining the Calibrated Range When Using Local Pushbuttons for Calibration:
      - When either **CAL LRV** or **CAL URV** is initiated from the local pushbuttons, the transmitter expects that the pressure applied at the time the button is pressed is equal to the LRV or URV value respectively.
      - This function trims the internal digital value of pressure; that is, it performs a calibration based on the application of accurate pressures equal to the values entered for LRV and URV in the transmitter database.
      - This function also sets the 4 and 20 mA output points; that is, the 4 and 20 mA points correspond to the values of LRV and URV in the database.
      - The value of LRV can be larger than the value of URV.
   b. Reranging Without the Application of Pressure:
      - Since the transmitter continually determines an internal digital value of the measured pressure from the lower range limit (LRL) to the upper range limit

(URL), the 4 and 20 mA output points can be assigned to any pressure values (within the span and range limits) without application of pressure.

- The reranging function is accomplished by entering new database values for LRV and URV.
- Reranging does not affect the calibration of the transmitter; that is, it does not affect the optimization of the internal digital value of pressure over a specific calibrated range.
- If the reranged LRV and URV are not within the calibrated range, the measured values may not be as accurate as when they are within the calibrated range.

5. When the optional local display is used, the internal digital value of pressure is sent directly to the indicator.
   - The display can show any measured pressure in selected units regardless of the calibrated range and the values of LRV and URV (within the limits of the transmitter and display).
   - If the measured pressure is outside the range established by the LRV and URV values in the database, the display shows the measurement but also continually blinks to indicate that the measurement is out of range. The mA current signal is saturated at either the low or high overrange limit respectively but the display continually shows the pressure.
6. When configured for 4 to 20 mA output, the internal digital value of pressure is converted to an analog current signal.
   - The transmitter sets the output at 4 mA for the LRV and 20 mA for the URV.
   - There is an independent trim on the digital-to-analog conversion stage. This trim allows for slight adjustment of the 4 and 20 mA outputs. This compensates for any slight difference that exists between the transmitter mA output and an external reference device which is measuring the current.
   - The mA trim does not affect the calibration or the reranging of the transmitter and does not affect the internal digital value of pressure or the transmission or display of measured pressure.
   - The mA trim can be done with or without pressure applied to the transmitter.
7. Zeroing from the local display does not affect the span.

   When the transmitter is zeroed to compensate for installed position effect, the transmitter can have either LRV pressure applied (**CAL LRV**) or zero pressure applied (**CAL AT0**). If the range is zero-based, either method produces the same result. However, if the range is not zero-based, it is advantageous to have both methods available.

   For example, consider a pressure transmitter having a range of 50 to 100 psig. If it is not feasible to vent the transmitter to atmosphere for zeroing, it can be zeroed while the LRV pressure of 50 psi is applied by using the **CAL LRV** function. On the other hand, if the transmitter has been installed but there is no pressure in the process line yet, it can be zeroed while open to atmosphere by using the **CAL AT0** function.

a. Zeroing with LRV Pressure Applied (**CAL LRV**):

- Before using this zeroing function, apply a pressure to the transmitter equal to the value of LRV stored in the transmitter database.
- When you zero the transmitter, the internal digital value of the pressure is trimmed to be equal to the value of LRV stored in the database and the mA output set to 4 mA.
- If zeroing is done when the applied pressure is different from the LRV pressure value in the database, the internal digital value of pressure is biased by the difference in the values but the output is still set at 4 mA.
- The **CAL LRV** and **CAL URV** function should be used when calibrating a transmitter for a specific range with known input pressures applied for the LRV and URV.

b. Zeroing a Gauge Pressure Transmitter with Zero Pressure Applied (**CAL AT0**):

— NOTE

Do **not** use the **CAL AT0** function with an absolute pressure transmitter. If an absolute pressure transmitter is vented to atmosphere, it does **not** have zero pressure applied but instead has the barometric pressure (approximately 14.7 psia) applied.

- Make sure that the applied pressure is at zero. This means venting the transmitter to atmosphere.
- When you zero the transmitter, the internal digital value of the pressure is trimmed to be equal to zero and the mA output set to an appropriate value such that the mA output is a normal 4 mA when the LRV pressure is applied later.

c. Zeroing an Absolute Pressure Transmitter

To zero an absolute pressure transmitter, the LRV can be temporarily set to the barometric pressure and a CAL LRV function performed with the transmitter vented to atmosphere. Then, the LRV can be set back to the proper value.

Calibration Setup

The following sections show setups for field or bench calibration. Use test equipment that is at least three times as accurate as the desired accuracy of the transmitter.

— NOTE

It is not necessary to set up calibration equipment to rerange the transmitter to a different range. The transmitter can be accurately reranged by simply changing the lower range value and the upper range value, which are stored in the transmitter database.

Setup of Electronic Equipment

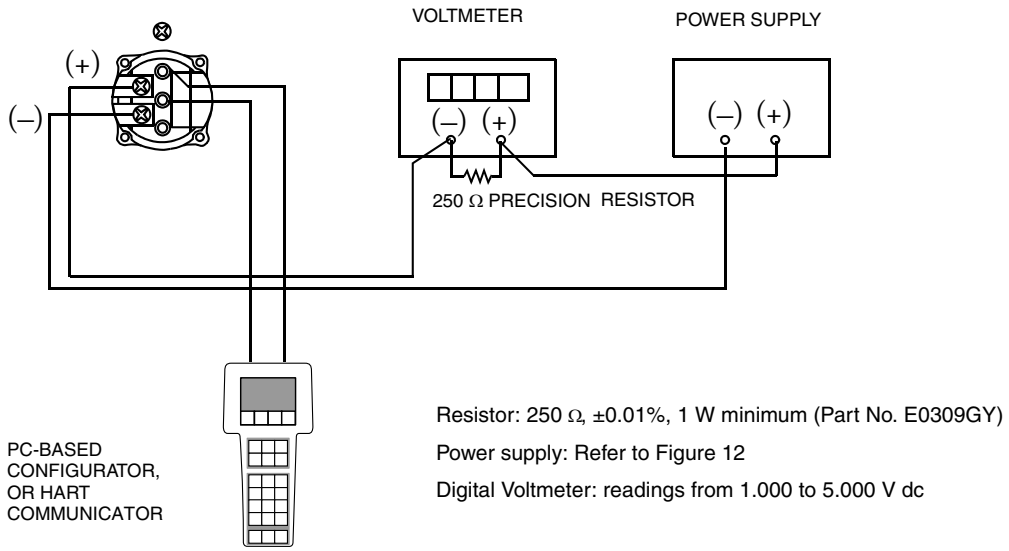

Figure 19. 4 to 20 mA Output Calibration Setup of Electronic Equipment

Field Calibration Setup

Field calibration is performed without disconnecting the process piping. This is only possible if you have a shutoff valve between the process and the transmitter and the process covers vent screw option (-V1).

If the transmitter is to be removed from the process for calibration, refer to “Bench Calibration Setup”below.

An adjustable air supply and a pressure measuring device are required. For example, a dead weight tester or an adjustable clean air supply and pressure gauge can be used. The pressure source can be connected to the transmitter with pipe fittings or it can be connected to the vent screw assembly using a calibration screw. The calibration screw has a Polyflo fitting and can be used for pressures up to 700 kPa (100 psi). It is available as Foxboro Part Number F0101ES.

To set up the equipment, refer to Figure 20 and then use the following procedure:

1. Close the shutoff valve between the process and the transmitter.
2. If a calibration screw **is** being used, remove the vent screw and replace it with the calibration screw. Connect the pressure source to the calibration screw using 6 x 1 mm or 0.250 inch tubing.
   If a calibration screw **is not** being used, remove the drain plug or the entire vent screw assembly (as applicable) from the high pressure side of the transmitter. Connect calibration tubing using a suitable thread sealant.
3. If calibrating the output signal, also connect equipment as shown in "Setup of Electronic Equipment."

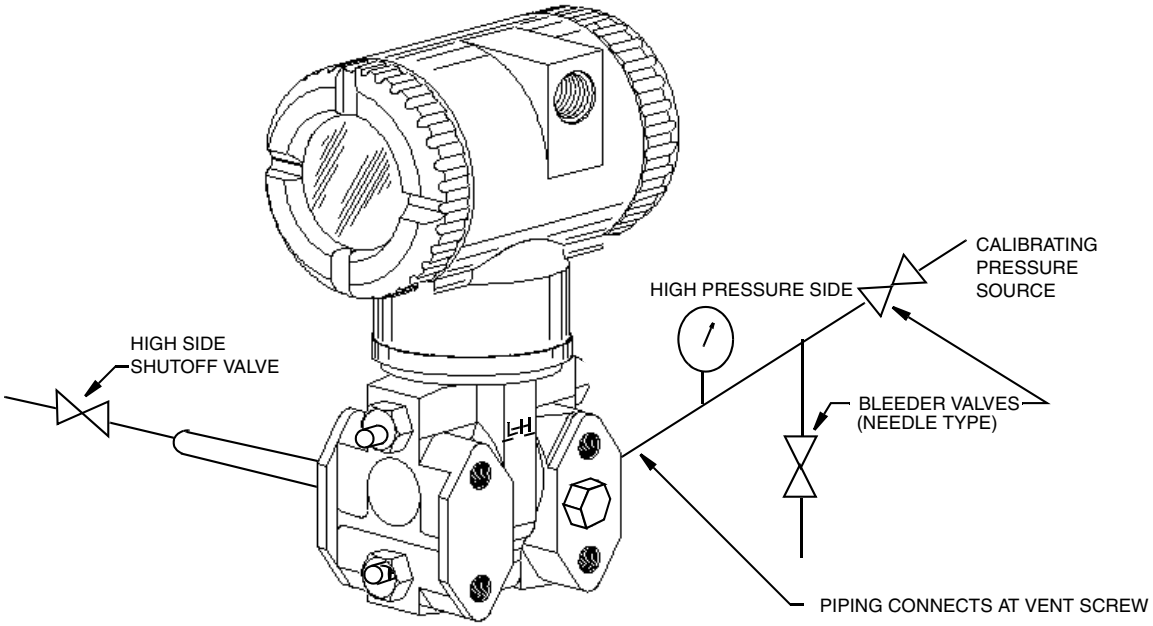

Figure 20. IAP20 and IGP20 Field Calibration Setup

Bench Calibration Setup

The bench calibration setup requires disconnecting the process piping. For calibration setup without disconnecting the process piping, refer to “Field Calibration Setup”above.

The bench calibration setup is shown in Figure 21. Connect the input piping to the high pressure side of the transmitter as shown. Vent the low pressure side of the transmitter.

If calibrating the output signal, also connect equipment as shown in "Setup of Electronic Equipment."

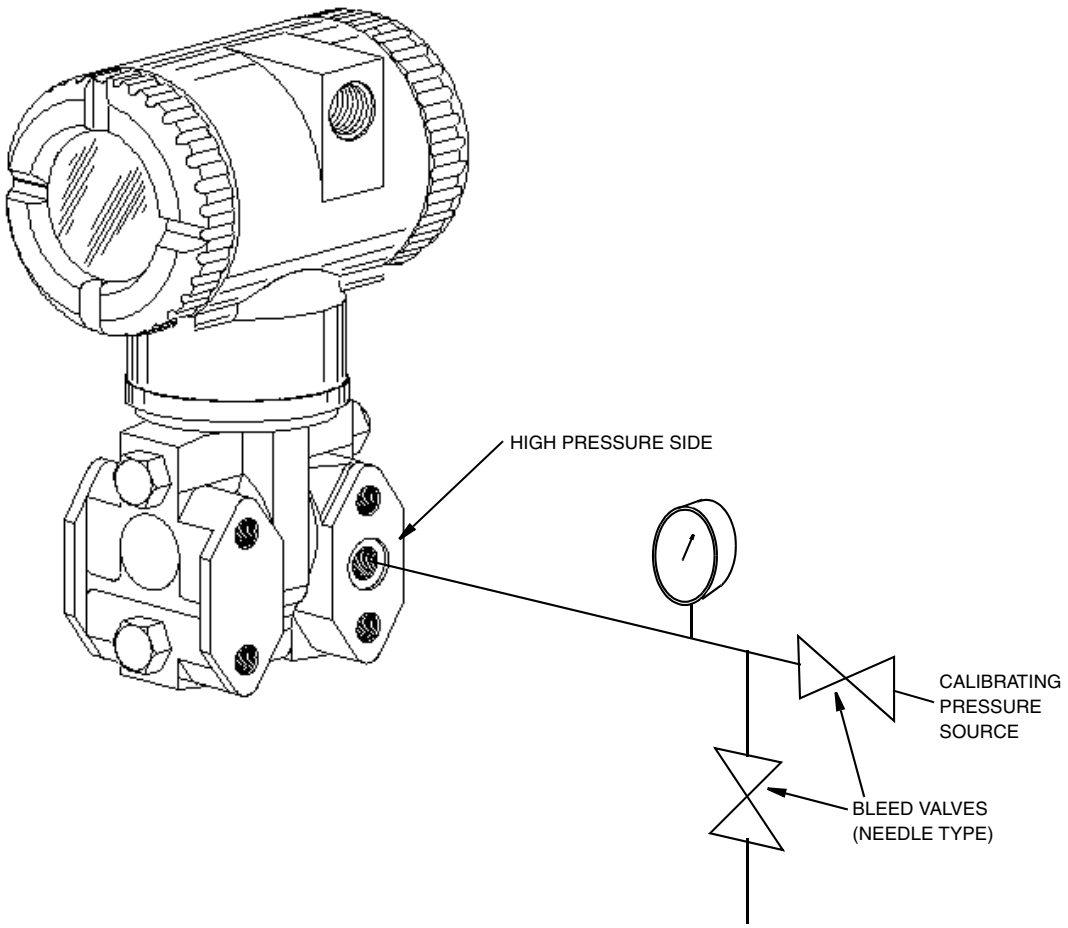

Figure 21. Bench Calibration Setup

Calibration Using a PC20

To calibrate the transmitter using a PC20 Configurator, follow the procedure in MI 020-495.

Calibration Using a PC50

To calibrate the transmitter using a PC50 Configurator, follow the procedure in MI 020-501 and MI 020-520.

Calibration Using a HART Communicator

To calibrate the transmitter using a HART Communicator, follow the procedure in MI 020-366.

Calibration Using the Optional Local Display

To access the Calibration mode (from normal operating mode), press the **Next** button. The display reads **CALIB**, the first item on the menu. Acknowledge your choice of this selection by pressing the **Enter** button. The display shows the first item in the Calibration menu.

NOTE

1. During calibration, a single change could affect several parameters. For this reason, if an entry is entered in error, re-examine the entire database or use the **Cancel** feature to restore the transmitter to its starting configuration and begin again.
2. During adjustment of 4 and 20 mA in the Calibration menu, the milliampere output does not reflect live measurement values.

Table 5. Calibration Menu

Item	Description
CAL AT0[(a)]	Calibrate at zero pressure.
CAL LRV	Calibrate with pressure at 0% of transmitter range (LRV).
CAL URV	Calibrate with pressure at 100% of transmitter range (URV).
ADJ 4mA	Adjust nominal 4 mA output.
ADJ20mA	Adjust nominal 20 mA output.
CALDATE	Enter the calibration date.
ADJ 4mA causes the following four submenus.	
A 4mA∆∆∆	Increase 4 mA output by large step.
A 4mA∇∇	Decrease 4 mA output by large step.
A 4mA∆	Increase 4 mA output by small step.
A 4mA∇	Decrease 4 mA output by small step.
ADJ 20mA causes the following four submenus.	
A 20mA∆∆∆	Increase 20 mA output by large step.
A 20mA∇∇	Decrease 20 mA output by large step.
A 20mA∆	Increase 20 mA output by small step.
A 20mA∇	Decrease 20 mA output by small step.

(a) Function not applicable to absolute pressure transmitters.

NOTE

It is not necessary to use the **ADJ4mA** or **ADJ20mA** menu selections (commonly known as mA Trim) unless there is a plant requirement to make the 4 and 20 mA output values exactly match readings on certain plant calibration equipment and the calibration operations done result in a small but unacceptable difference between the transmitter mA output and the test equipment mA readout values.

Proceed to calibrate your transmitter by using the **Next** key to select your item and the **Enter** key to specify your selection per Figures 22 and 23. At any point in the calibration you can **Cancel**, restore your prior calibration and return to the on-line mode or **Save** your new calibration.

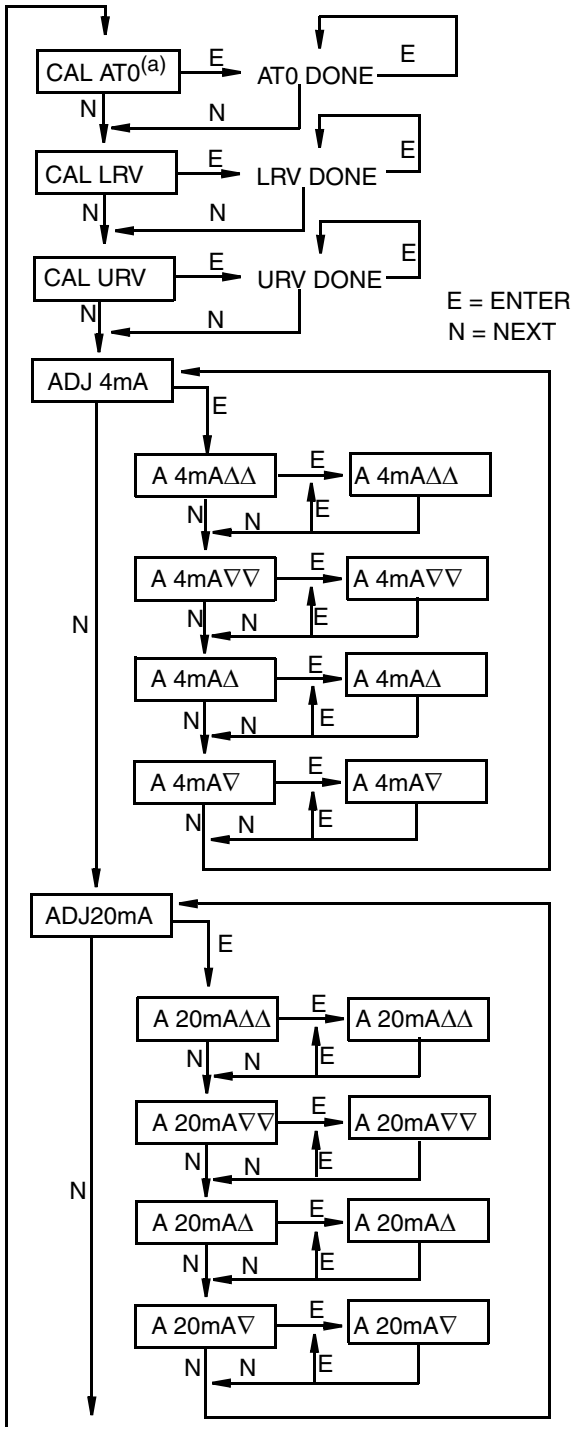

(continued on next figure)

CAL AT0: To set or reset the zero point at zero pressure, apply zero differential pressure to the transmitter and, at display of **CAL AT0**, press **Enter**. This can be done whether LRV is zero or not. Completion is indicated by the display **AT0 Done**.

CAL LRV: To set or reset 0% of range input, apply differential pressure to the transmitter equal to the lower range value (LRV) in the transmitter database and, at display of **CAL LRV**, press **Enter**. Completion is indicated by the display **LRV Done**.

CAL URV: To set or reset 100% of range input, apply differential pressure to the transmitter equal to the upper range value (URV) in the transmitter database and, at display of **CAL URV**, press **Enter**. Completion is indicated by the display **URV Done**.

ADJ4mA: If you configured your transmitter operating mode as 4 to 20 mA, you can adjust the 4 mA output by going to **ADJ4mA** using the **Next** button and press **Enter**. This menu item is bypassed if you configured your transmitter for multidrop mode (poll address other than zero).

To increase the 4 mA output by a large (0.025 mA) step, press **Enter** at the display **A 4mA**ΔΔ. To decrease it by a large step, go to

Notes:
(a) Not applicable to Absolute Pressure Transmitters.

Figure 22. Calibration Structure Diagram

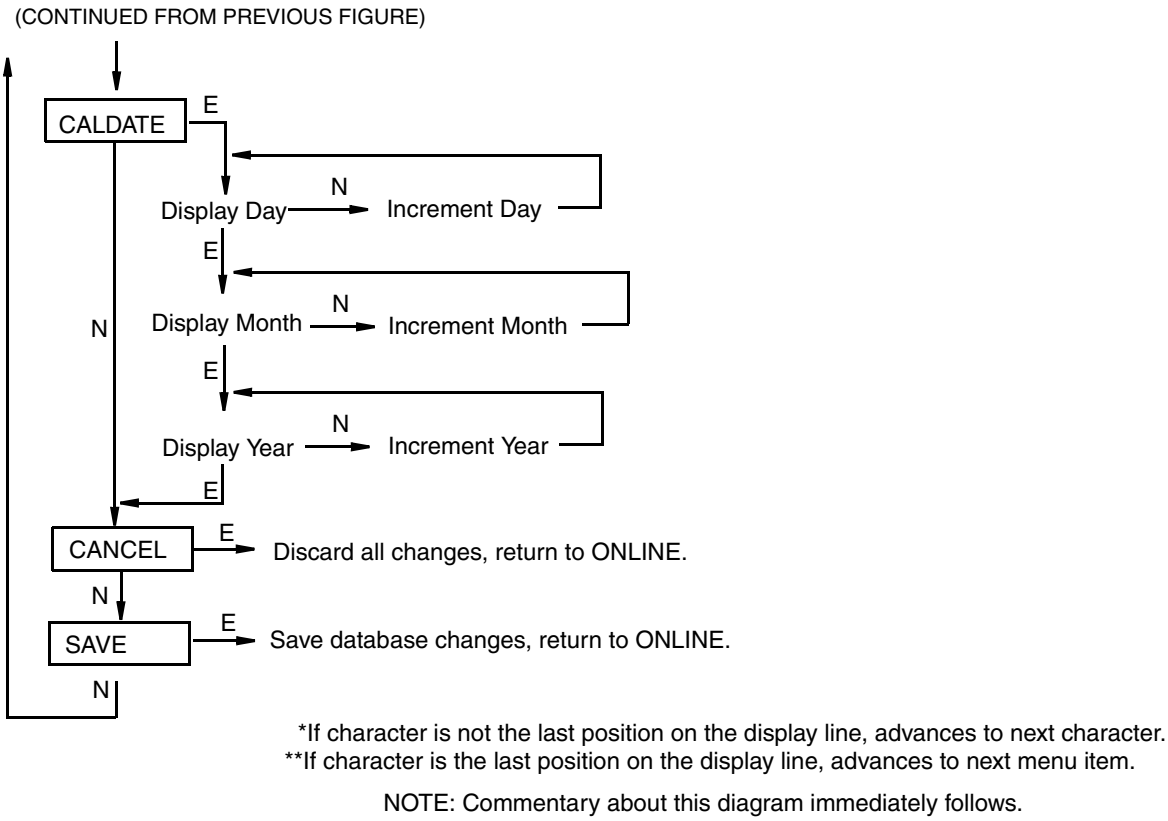

Figure 23. Calibration Structure Diagram (Continued)

Commentary on Figure 23

CALDATE:

This is not a required entry but can be used for recordkeeping or plant maintenance purposes. To edit the calibration date, go to **CALDATE** with the **Next** button and press **Enter**. You then can change the day, month, and year. The display shows the last date with the day flashing. Use the **Next** button to step through the menu of digits to select the desired day, then press **Enter**. Repeat this process for the month and year.

Zero Adjustment Using External Zero Button

An optional external zero adjustment mechanism in the electronics housing allows calibration at zero differential pressure (the **CAL AT0** function) or at the lower range value differential pressure (the **CAL LRV** function) without removing the electronics compartment cover. The mechanism is magnetically activated through the housing wall to prevent moisture from entering the enclosure.

To use this feature:

1. Unlatch the external zero button by turning it 90° in a counterclockwise direction so that the screwdriver slot lines up with the two holes in the face of the adjacent part. Do **not** push the button in with the screwdriver while doing this.

2. To set or reset the zero point at zero pressure, apply zero pressure to the transmitter and press the external zero button until the display reads **CAL AT0**. Release the button. The display reads **CAL WAIT** and then **RESET** (calibration is complete).

   To set or reset the 0% of range input, apply the lower range value (LRV) pressure to the transmitter and press and hold the external zero button until the display reads **CAL LRV** (it reads **CAL AT0** first). Release the button. The display reads **CAL WAIT** and then **RESET** (calibration is complete).

— NOTE

If the optional display is not present, the same functions can be accomplished by depending on the length of time the external zero button is depressed. Press and hold the button for 1 to 3 seconds for **CAL AT0** or for 5 or more seconds for **CAL LRV**. Therefore, if your LRV is zero, just depress the button for a few seconds. However, if your LRV is not zero, use **caution** when using the external zero button without the optional display because you must rely strictly on the length of time the button is depressed to differentiate between **CAL AT0** and **CAL LRV**.

   Other possible messages are:
   DISABLD if **EX ZERO** is configured **EXZ DIS**
   IGNORED if the transmitter is not in the on-line mode.
   WP ENAB if write protection jumper is in write protect position.

   If additional rezeroing is required after Steps 1 and 2 have been accomplished, repeat Step 2.

3. Relatch the external zero button by turning it 90° in a clockwise direction to prevent accidental pressing of the button. Do **not** push the button in with the screwdriver while doing this.

Error Messages

Table 6. Calibration Error Messages

Parameter	Condition Tested	Error Message	User Action
Password Protection	Password	BAD PWD	Bad password entered, use another.
Write Protection	Write protection enabled	REJECT	Displays when user attempts an action that is write protected.
ZERO	Internal offset too large	BADZERO	Check applied pressure, configured **M1 LRV** and configured **M1 EOFF**.
SPAN	Slope too large or too small	BADSPAN	Check applied pressure, configured **M1 LRV** and configured **M1 EFAC**.
M1 URV	M1URV > max pressure in EGU	URV>FMX	Entered pressure is greater than maximum rated pressure of transmitter. Check entry. Verify EGUs.
	M1URV < min pressure in EGU	URV<FMN	Entered pressure is less than minimum rated pressure of transmitter. Check entry. Verify EGUs.
	M1 URV = M1 LRV	LRV=URV	Cannot set span to 0. Check entry. Check **M1 LRV**.
	M1 turndown exceeds limit	BADTDWN	Check entry. Check **M1 LRV**.
M1 LRV	M1LRV > max pressure in EGU	LRV>FMX	Entered pressure is greater than maximum rated pressure of transmitter. Check entry. Verify EGUs.
	M1LRV < min pressure in EGU	LRV<FMN	Entered pressure is less than minimum rated pressure of transmitter. Check entry. Verify EGUs.
	M1 URV = M1 LRV	LRV=URV	Cannot set span to 0. check entry. Check **M1 URV**.
	M1 turndown exceeds limit	BADTDWN	Check entry. Check **M1 URV**.

5. Configuration

Configurable Parameters

The following table lists all the configurable parameters and the factory default for the IAP20-T and IGP20-T Transmitters. The factory default values have been customized if the transmitter was ordered with optional feature -C2. The table also shows which parameters are configurable with the integral vs. remote configurators.

Table 7. Configurable Parameters

Parameter	Capability	Factory Default	Configurable with		Application Requirement
			Integ. Indic.	Remote Config.	
Descriptors					
Tag Number	8 characters max	Tag Number	No	Yes	
Descriptor	16 characters max	Tag Name	No	Yes	
Message	32 characters max	Inst Location	No	Yes	
Input					
Calibrated Range	LRV to URV in units listed in (a) below	See (b) below when not specified per S.O.	Yes	Yes	
Output					
Meas. #1 Output	4 to 20 mA or Fixed Current. Specify Poll Address (1-15) for Fixed Current.	4 to 20 mA	Yes	Yes	
Meas. #1 Mode	Linear	Linear	Yes	Yes	
Meas #1 EGUs	Select from units listed in (a) below.	Same as Calibrated Range	Yes	Yes	
Meas. #2 Mode	Linear	Linear	Yes	Yes	
Meas #2 EGUs	If linear, select from units listed in (a) below	Same as Calibrated Range	Yes	Yes	
Temp. Sensor Fail Strategy	Normal oper or fail-safe	Fail-safe	Yes		
Fail-safe	High or Low	High	Yes	Yes	
External Zero	Enabled or Disabled	Enabled	Yes	Yes	
Damping	0 to 32 seconds	None	Yes	Yes	
Poll Address	0 - 15	0	Yes	Yes	
LCD Indicator (c)	Meas #1 EGU or % Lin	Meas #1 EGU	Yes	No	

Table 7. Configurable Parameters (Continued)

Parameter	Capability	Factory Default	Configurable with		Application Requirement
			Integ. Indic.	Remote Config.	

(a) psi, inHg, ftH_2O, inH_2O, atm, bar, mbar, MPa, Pa, kPa, kg/cm^2, g/cm^2, mmHg, torr, mmH_2O

(b) Span Code A: 0 to 30 inH_2O; Span Code B: 0 to 200 inH_2O; Span Code C: 0 to 30 psi; Span Code D: 0 to 300 psi; Span Code E: 0 to 3000 psi; Span Code F: 0 to 5000 psi.

(c) Measurement #2 can be displayed at any time by pressing the **Enter** button regardless of the local display configuration. This reverts to Measurement #1 or % Lin (as configured) when power is cycled off and on.

Configuration Using a PC20

To configure the transmitter using a PC20 Configurator, follow the procedure in MI 020-495.

Configuration Using a PC50

To configure the transmitter using a PC50 Configurator, follow the procedure in MI 020-501 and MI 020-520.

Configuration Using a HART Communicator

To configure the transmitter using a HART Communicator, follow the procedure in MI 020-366.

Configuration Using the Optional Local Display

You can access the Configuration mode by the same multi-level menu system that was used to enter Calibration mode. Entry to the Mode Select menu is made (from normal operating mode) by pressing the **Next** button. The display reads **CALIB**, the first item on the menu. Press the **Next** button again to get to the second item on the menu, **CONFIG**. Acknowledge your choice of this selection by pressing the **Enter** button. The display shows the first item in the Configuration menu. You can then configure items shown in the following table. The standard factory default configuration is also given in this table.

The standard factory default configuration is not used if custom configuration option -C2 has been specified. Option -C2 is a full factory configuration of all parameters to the user's specifications.

NOTE

1. You can configure most parameters using the local display. However, for more complete configuration capability, use a HART Communicator or PC-Based configurator.

2. During configuration, a single change can affect several parameters. For this reason, if an entry is entered in error, re-examine the entire database or use the **Cancel** feature to restore the transmitter to its starting configuration and begin again.

Table 8. Configuration Menu

Item	Description	Initial Factory Configuration
POLLADR	Poll Address: 0 - 15	0
EX ZERO[a]	External Zero: enable or disable	Enable
S2 FAIL	Temperature Sensor Failure Strategy: S2FATAL or S2NOFTL	S2FATAL
OUT DIR	4 to 20 mA Output: forward or reverse	Forward
OUTFAIL	4 to 20 mA Output: fail mode output - low or high	High
OFFL MA	4 to 20 mA Output in offline mode - last or user set	USER MA
DAMPING	Damping: none, 1/4, 1/2, 1, 2, 4, 8, 16, or 32 seconds	None
M1 MODE	Output: linear or type of square root[b]	Linear
M1DISP	Local Indicator Display in linear mode: in percent or engineering units	M1EGU
M1 EGU	User-Defined Engineering Units	inH_2O or psi
M1EOFF	Offset applied to the Primary Value	0
M1 URV	Primary Upper Range Value	URL
M1 LRV	Primary Lower Range Value	0
M2 MODE	Output: linear or type of square root	Linear
M2 EGU	User-Defined Engineering Units	Same as M1 EGU
DISPLAY	Display M1, M2, or Toggle between M1 and M2	M1
CALDATE	Calibration Date	- - -
ENA PWD	Enable password; no password, configuration only, or configuration and calibration	NO PWD
CFG PWD	User set configuration password (six characters)	- - -
CAL PWD	User set calibration password (six characters)	- - -
SET GDB	Rewrite all calibration and configuration values with default values	- - -

(a) Applies only if transmitter contains External Zero option.

(b) Square root is not applicable to absolute pressure, gauge pressure, and flange level measurement.

Proceed to configure your transmitter by using the **Next** button to select your item and the **Enter** button to specify your selection per the following three figures. At any point in the configuration you can **Cancel** your changes and return to the on-line mode, or **Save** your changes.

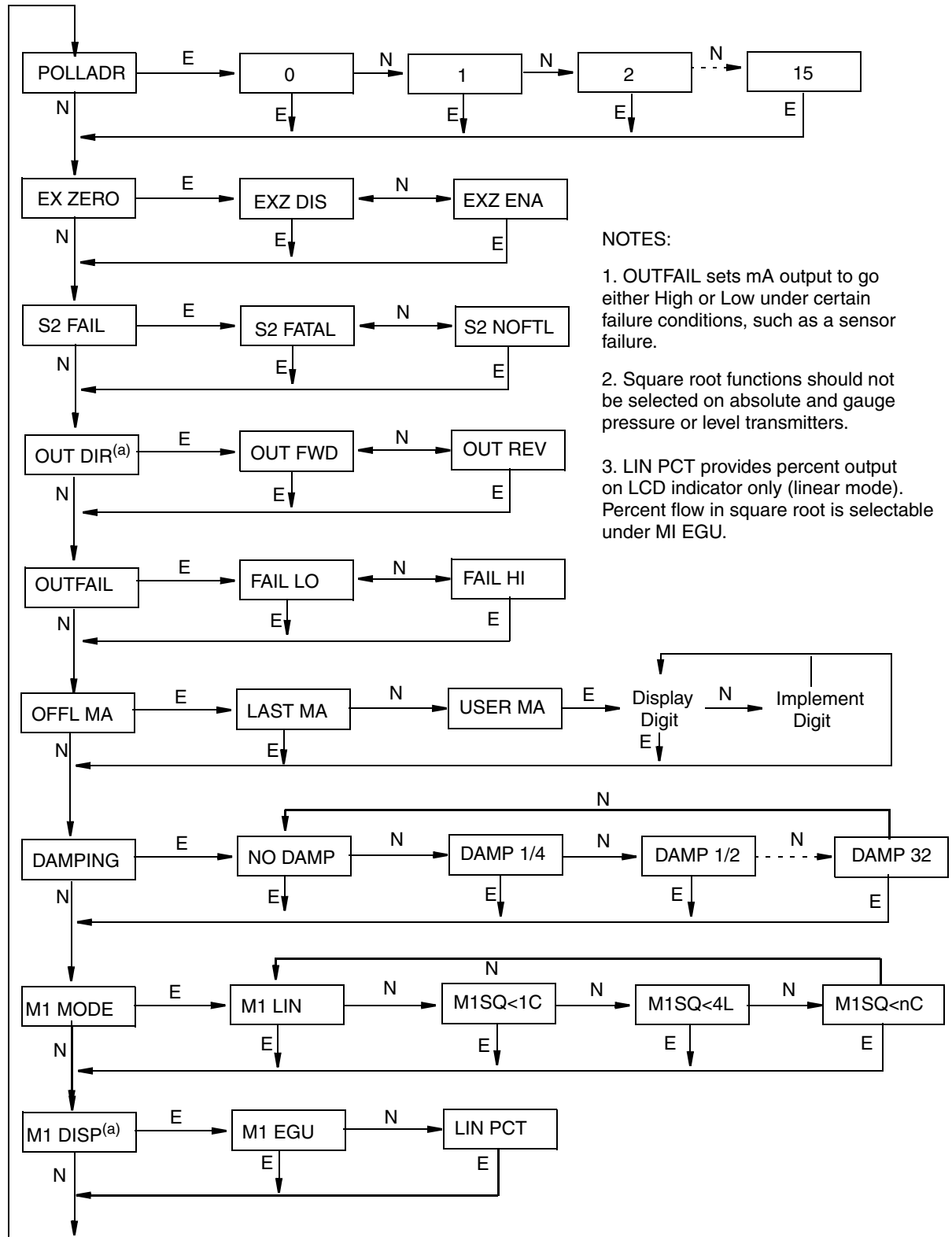

NOTES:

1. OUTFAIL sets mA output to go either High or Low under certain failure conditions, such as a sensor failure.

2. Square root functions should not be selected on absolute and gauge pressure or level transmitters.

3. LIN PCT provides percent output on LCD indicator only (linear mode). Percent flow in square root is selectable under MI EGU.

(continued on next figure)

(a) Linear Mode only.

Figure 24. Configuration Structure Diagram

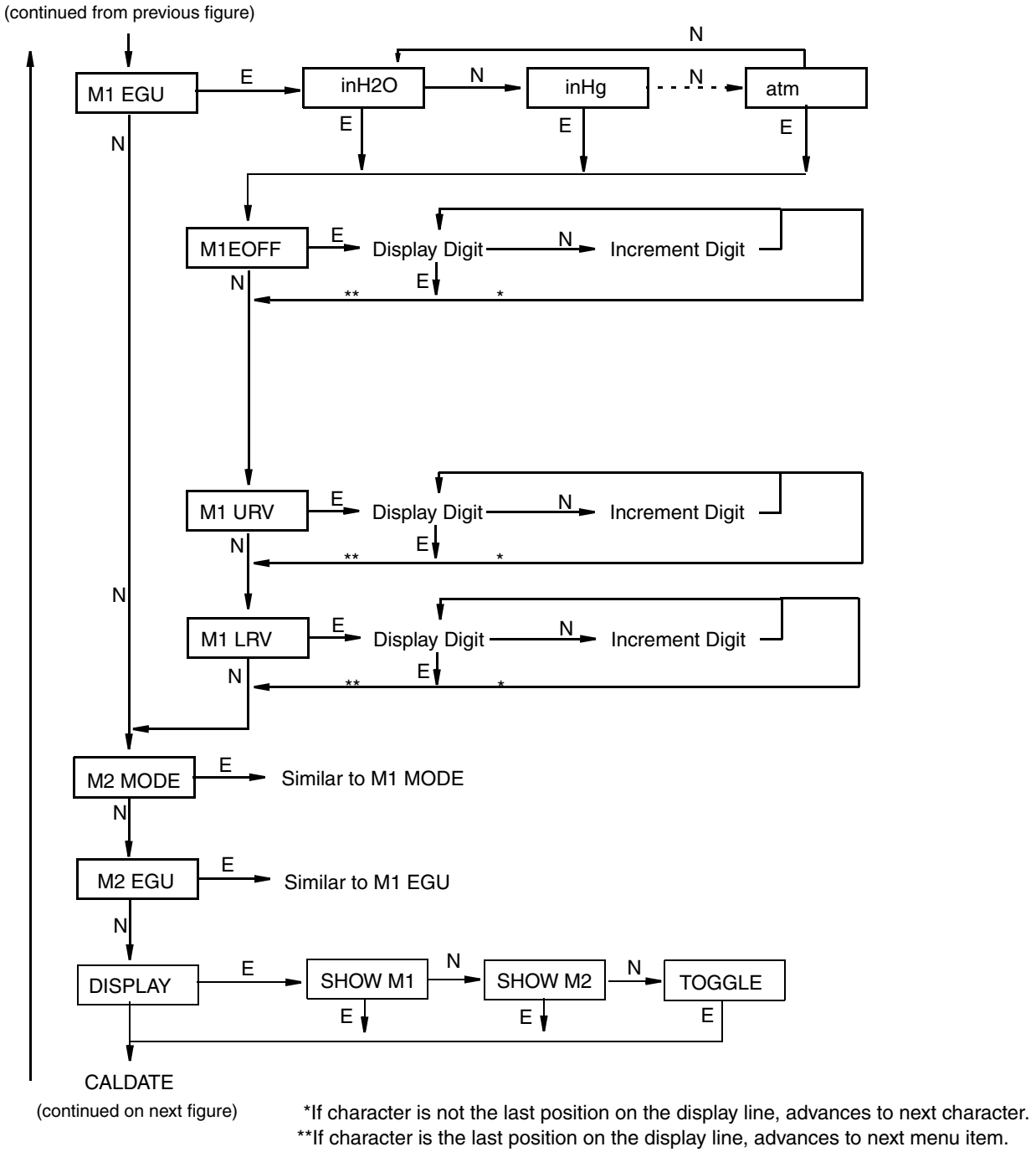

*If character is not the last position on the display line, advances to next character.
**If character is the last position on the display line, advances to next menu item.

Figure 25. Configuration Structure Diagram (Continued)

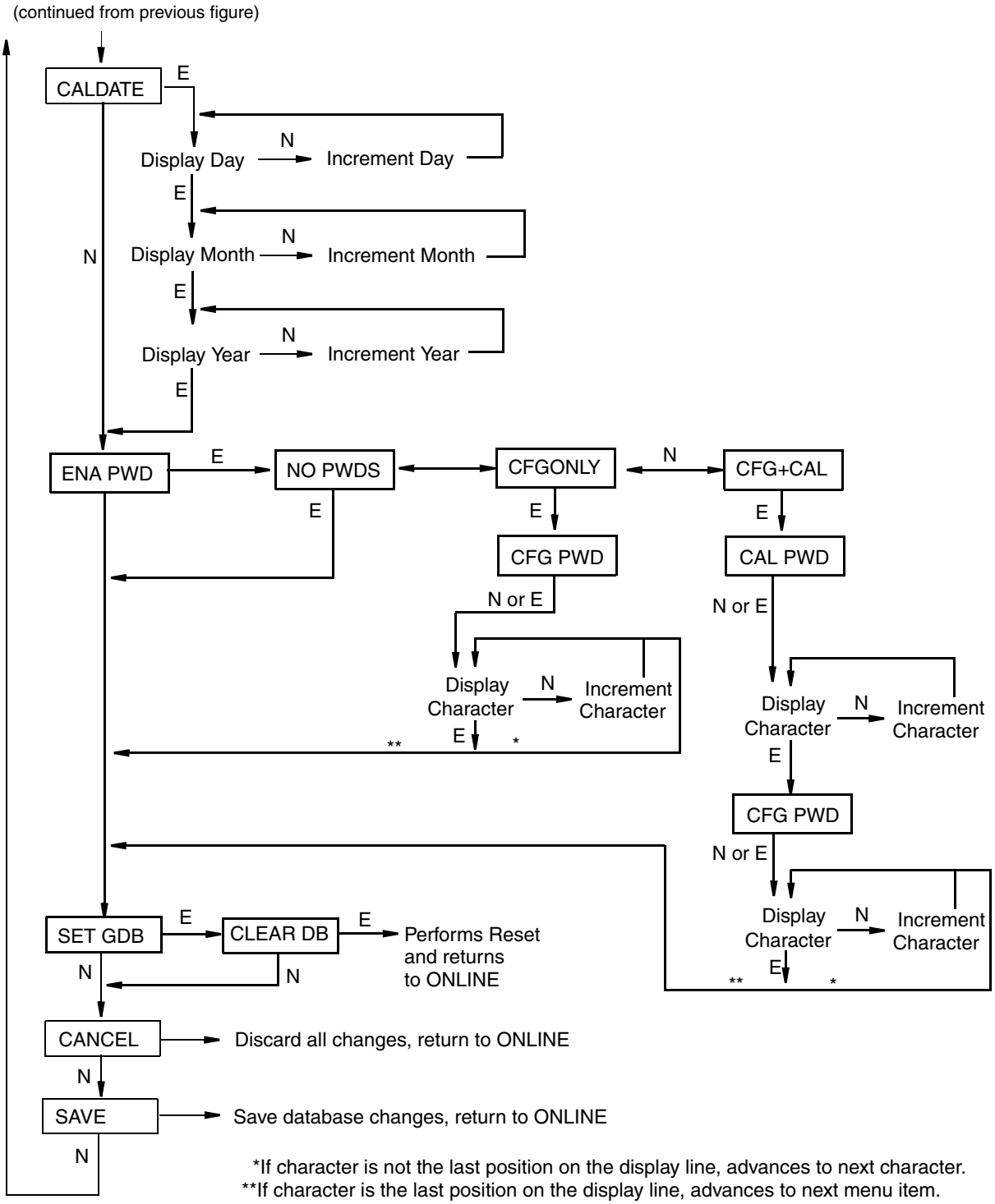

Figure 26. Configuration Structure Diagram (Continued)

Commentary on Configuration Structure Diagram

In general, use the **Next** button to select your item and the **Enter** button to specify your selection.

POLLADR:

To configure the transmitter poll address, press **Enter**. Use the **Next** button to select an address of **0** through **15**, then press **Enter**. An address of 1 through 15 is used for multidrop mode with a fixed mA output.

EX ZERO:

The External Zero feature allows the optional external zero pushbutton to be disabled for additional security. To configure this feature, go to **EX ZERO** with the **Next** button and press **Enter**. Use the **Next** button to select **EXZ DIS** or **EXZ ENA** and press **Enter**.

S2 FAIL:

The temperature sensor compensates for changes in temperature in the transmitter electronics. Failure of this sensor can cause a 4 to 20 mA accuracy change of up to 0.25%. The **S2 FAIL** feature allows you to specify action (or no action) if such a failure occurs. To configure this feature, go to **S2 FAIL** with the **Next** button and press **Enter**. Use the **Next** button to select **S2 FATAL** (to have the output go to that configured in **OUTFAIL**) or **S2 NOFTL** (to continue operation with a temperature sensor failure). This parameter has no effect if **POLLADR** is configured to any number from **1** through **15**.

OUT DIR:

To configure the Output Direction, go to **OUT DIR** with the **Next** button and press **Enter**. Use the **Next** button to select **OUT FWD** (4 - 20 mA) or **OUT REV** (20 - 4 mA) and press **Enter**. This parameter has no effect if **POLLADR** is configured to any number from **1** through **15**.

OUTFAIL:

The Outfail feature provides high or low output with certain malfunctions. To configure the fail mode output, go to **OUTFAIL** with the **Next** button and press **Enter**. Use the **Next** button to select **FAIL LO** or **FAIL HI** and press **Enter**. This parameter has no effect if **POLLADR** is configured to any number from **1** through **15**.

OFFL MA:

The Off-line mA feature enables you to set the output to a specified value or to the last value if the transmitter goes off-line. To configure the off-line output, go to **OFFL MA** with the **Next** button and press **Enter**. Use the **Next** button to select **LAST MA** or **USER MA** and press **Enter**. If you selected **USER MA**, press **Enter** again at the display of digits. Then use the **Next** button to step through the library of digits to select the desired first digit, then press **Enter**. Your selection is entered and the second character flashes. Repeat this procedure until you have entered the last digit. Then use the **Next** button to move the decimal point to its desired location and press **Enter**. The display advances to the next menu item.

DAMPING:

To configure additional damping, go to **DAMPING** with the **Next** button and press **Enter**. Use the **NEXT** button to select **NO DAMP**, **DAMP 1/4**, **DAMP 1/2**, **DAMP 1**, **DAMP 2**, **DAMP 4**, **DAMP 8**, **DAMP 16**, or **DAMP 32** and press **Enter**.

M1 MODE:

To configure the mode of the primary output, go to **M1 MODE** with the **Next** button and press **Enter**. Use the **Next** button to select **M1 LIN** and press **Enter**. **M1SQ<1C** (square root with cutoff below 1% of calibrated pressure range), **M1SQ<4L** (square root with linear below 4% of calibrated pressure range), or **M1SQ<nC** (square root with user configured cutoff specified between 0 and 20% of the flow range) is not applicable to absolute or gauge pressure measurement.

M1 DISP:

To configure the optional local indicator to show engineering units or percent, go to **M1 DISP** with the **Next** button and press **Enter**. Use the **Next** button to select **M1 EGU** or **LIN PCT** and press **Enter**. **LIN PCT** only provides percent readings on the local display. The M1 engineering unit is used for remote communication of Measurement #1, even if **LIN PCT** is selected.

M1 EGU:

To configure pressure or flow engineering units for your display and transmission, go to **M1 EGU** with the **Next** button and press **Enter**. Because **M1 MODE** is configured as **M1 LIN**, you are asked to specify one of the following pressure labels: **psi**, **inHg**, **ftH_2O**, **inH_2O**, **atm**, **bar**, **mbar**, **MPa**, **Pa**, **kPa**, **kg/cm^2**, **g/cm^2**, **mmHg**, **torr**, or **mmH_2O**. Your transmitter then automatically adjusts **M1EFAC** (engineering factor), **M1 URV** (upper range value), and **M1 LRV** (lower range value). **M1EOFF** is set to zero.

M1EOFF:

You can introduce an offset by entering a nonzero value for **M1EOFF**. The offset affects the value of PV that is transmitted in engineering units, transmitted as an analog mA signal, and displayed in the (optional) local display. This feature can be used in such applications as an elevated water storage tank where the transmitter is at grade level but the output is to correspond to the level of the tank. It can also be used for a grade level water storage tank where the transmitter is installed above the bottom of the tank and the output is to correspond to the level in the tank.

M1 URV:

To edit the upper range value, press **Enter** at the prompt **M1 URV**. Use the procedure "Entering Numerical Values" in Operation section to edit this parameter.

M1 LRV:

Similar to **M1URV** immediately above.

M2 MODE:

M2 is a secondary measurement that is read by the Model 275 HART Communicator and can be displayed on the optional display. You might use this feature to display M1 in your primary pressure units and M2 in a different set of pressure units. To configure this parameter, go to **M2 MODE** with the **Next** button and press **Enter**. Use the next button to select **M2 LIN** and press **Enter**.

M2 EGU:

Similar to **M1 EGU**.

DISPLAY:

To display M1, M2, or to toggle between M1 and M2, go to **DISPLAY** with the **Next** button and press **Enter**. Use the **Next** button to select **SHOW M1**, **SHOW M2**, or **TOGGLE** and press **Enter**.

CALDATE:

This is not a required entry but can be used for record-keeping or plant maintenance purposes. To edit the calibration date, go to **CALDATE** with the **Next** button and press **Enter**. You then can change the day, month, and year. The display shows the last date with the day flashing. Use the **Next** button to step through the library of digits to select the desired day, then press **Enter**. Repeat this process for the month and year.

ENA PWD:

To enable or disable the password feature, go to **ENA PWD** with the **Next** button and press **Enter**. Use the **Next** button to select **NO PWDS** (password not required for either calibration or configuration), **CFGONLY** (password required to configure but not to calibrate), or **CFG+CAL** (passwords required to both configure and calibrate) and press **Enter**.

If you selected **CFG ONLY**, the display changes to **CFG PWD**. Press either the **Next** or **Enter** button. Use the **Next** button to step through the library of characters to select the desired first character, then press **Enter**. Your selection is entered and the second character flashes. Repeat this procedure until you have created your password. If the password has less than six characters, use blanks for the remaining spaces. When you have configured the sixth space, the display advances to the next menu item.

If you selected **CFG+CAL**, the display changes to **CAL PWD**. To create the Calibration password, press either the **Next** or **Enter** button. Use the **Next** button to step through the library of characters to select the desired first character, then press **Enter**. Your selection is entered and the second character flashes. Repeat this procedure until you have created your password. If the password has less than six characters, use blanks for the remaining spaces. When you have configured the sixth space, the display advances to **CFG PWD**. Use the same procedure to create the configuration password.

NOTE

In normal operation, the CAL PWD allows access to only calibration mode. The CFG PWD allows access to both configuration and calibration.

! CAUTION

Record your new password before saving changes to the database.

SET GDB:

If your transmitter database becomes corrupted and you receive an **INITERR** message upon startup, this function enables you to rewrite all calibration and configuration values with default values.

CAUTION

Any calibration and configuration values that you have entered will be lost. Therefore, **SET GDB** should **not** be selected if your transmitter is functioning normally.

Character Lists

Table 9. Alphanumeric Character List

Character List*	
@	‘
, (comma)	(
A-Z (uppercase)	)
[	*
\	+
]	-
^	.
_ (underscore)	/
space	0-9
!	:
“	;
#	<
$	>
%	=
&	?

*List only applies to a HART Communicator not to the optional local display.

Table 10. Numeric Character List

Character List
–
. (decimal point)
0 through 9

Error Messages

Table 11. Configuration Error Messages

Parameter	Condition Tested	Error Message	User Action
Password Protection	Password	BAD PWD	Bad password entered, use another.

Table 11. Configuration Error Messages (Continued)

Parameter	Condition Tested	Error Message	User Action
Write Protection	Write Protection Enabled	REJECT	Displays when user attempts an action that is write protected.
M1EFAC	M1EFAC < 0	-M1EFAC	Negative **M1 EFAC** is not valid. Change **M1 EFAC** to positive value.
	M1EFAC = 0	0M1EFAC	**M1 EFAC** = 0 is not valid. Change **M1 EFAC** to positive value.
M1 URV	M1URV > max pressure in EGU	URV>FMX	Entered pressure is greater than maximum rated pressure of transmitter. Check entry. Verify EGUs.
	M1URV < min pressure in EGU	URV<FMN	Entered pressure is less than minimum rated pressure of transmitter. Check entry. Verify EGUs.
	M1 URV = M1 LRV	LRV=URV	Cannot set span to 0. Check entry. Check **M1 LRV**.
	M1 turndown exceeds limit	BADTDWN	Check entry. Check **M1 LRV**.
M1 LRV	M1LRV > max pressure in EGU	LRV>FMX	Entered pressure is greater than maximum rated pressure of transmitter. Check entry. Verify EGUs.
	M1LRV < min pressure in EGU	LRV<FMN	Entered pressure is less than minimum rated pressure of transmitter. Check entry. Verify EGUs.
	M1 URV = M1 LRV	LRV=URV	Cannot set span to 0. Check entry. Check **M1 URV**.
	M1 turndown exceeds limit	BADTDWN	Check entry. Check **M1 URV**.
M2EFAC	M2EFAC < 0	-M2EFAC	Negative **M2 EFAC** is not valid. Change **M2 EFAC** to positive value.
	M2EFAC = 0	0M2EFAC	**M2 EFAC** = 0 is not valid. Change **M2 EFAC** to positive value.

6. Maintenance

DANGER

For nonintrinsically safe installations, to prevent a potential explosion in a Division 1 hazardous area, de-energize transmitters before you remove threaded housing covers. Failure to comply with this warning could result in an explosion resulting in severe injury or death.

Error Messages

For error messages displayed on the HART Communicator refer to MI 020-366.

Parts Replacement

Parts replacement is generally limited to the electronics module assembly, housing assembly, sensor assembly, terminal block assembly, cover O-rings, and optional display. For part numbers relating to the transmitter and its options, see PL 009=007.

Replacing the Terminal Block Assembly

1. Turn off transmitter power source.
2. Remove the Field Terminals and the Electronics compartment covers by rotating them counterclockwise. Screw in cover lock if applicable.
3. Remove the digital display (if applicable) as follows: grasp the two tabs on the display and rotate it about 10° in a counterclockwise direction.
4. Remove the electronics module from the housing by loosening the two captive screws that secure it to the housing. Then pull the module out of the housing far enough to gain access to the cable connectors on the rear of the module.
5. Remove the four socket head screws securing the terminal block.
6. Disconnect the terminal block cable connector from the electronics module.
7. Remove the terminal block and the gasket under it.
8. Connect the new terminal block cable connector to the electronics module.
9. Install the new terminal block and new gasket and reinstall the four screws to 0.67 N·m (6 in·lb) in several even increments.
10. Reinstall the electronics module (and digital display if applicable).
11. Reinstall the covers onto the housing by rotating them clockwise to seat the O-ring into the housing and then continue to hand tighten until the each cover contacts the housing metal-to-metal. If cover locks are present, lock the cover per the procedure described in “Cover Locks” on page 19.
12. Turn on transmitter power source.

Replacing the Electronics Module Assembly

To replace the electronics module assembly, refer to Figure 27 and proceed as follows:

1. Turn off transmitter power source.
2. Remove the electronics compartment cover by rotating it counterclockwise. Screw in cover lock if applicable.
3. Remove the digital display (if applicable) as follows: grasp the two tabs on the display and rotate it about 10° in a counterclockwise direction. Pull out the display and disconnect its cable.
4. Remove the electronics module from the housing by loosening the two captive screws that secure it to the housing. Then pull the module out of the housing far enough to gain access to the cable connectors on the rear of the module.

! CAUTION

The electronics module is "one assembly" at this point and is electrically and mechanically connected to topworks with a flexible ribbon signal cable, a 2-wire power cable, and in some cases, a cable for an external zero pushbutton. Do **not** exceed the slack available in these cables when removing the assembled module.

5. Unplug all cable connectors from the rear of the electronics module and place the module on a clean surface.
6. Predetermine connector orientation, then insert the cable connectors into the replacement module. Replace the module in the housing using care not to pinch the cables between the module and the housing. Tighten the two screws that secure the module to the housing.
7. Connect the cable from the digital display to the electronics module. Ensure that the O-ring is fully seated in the display housing. Then, holding the digital display by the tabs at the sides of the display, insert it into the housing. Secure the display to the housing by aligning the tabs on the sides of the assembly and rotating it about 10° in a clockwise direction.
8. Reinstall the cover onto the housing by rotating it clockwise to seat the O-ring into the housing and then continue to hand tighten until the cover contacts the housing metal-to-metal. If cover locks are present, lock the cover per the procedure described in "Cover Locks" on page 19.
9. Turn on transmitter power source.

The module replacement procedure is now complete.

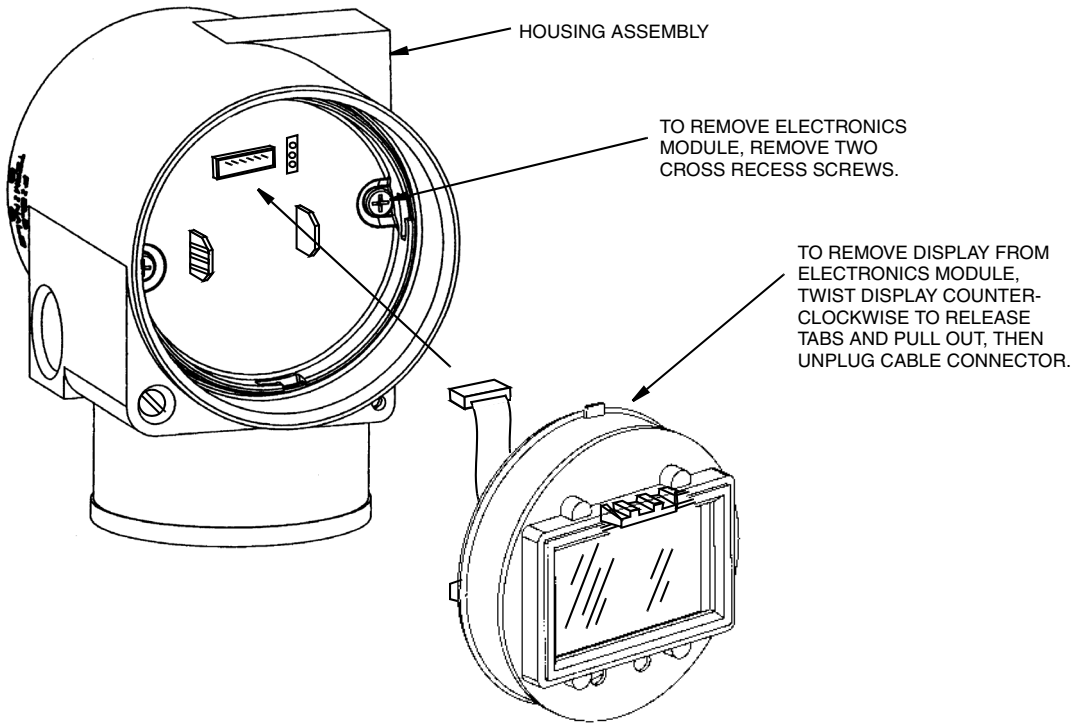

Figure 27. Replacing the Electronics Module Assembly and Display

Removing and Reinstalling a Housing Assembly

To remove and reinstall a housing assembly, refer to Figure 27 and proceed as follows:

1. Remove the electronics module per Steps 1 through 5 in the previous procedure.
2. If your housing has an anti-rotation screw, remove the red lacquer from the screw recess. Turn the screw three full turns counterclockwise.
3. If your housing has a retention clip, remove the red lacquer from the screw recess. Remove the screw completely, and slide the clip off the housing. Save the clip and screw for future use,
4. Remove the housing by rotating it counterclockwise (when viewed from the top). Use caution to avoid damaging the sensor cable.
5. Inspect the sensor O-ring for damage. If the O-ring is damaged, replace it with the appropriate O-ring. (See parts list for your transmitter). Lubricate the O-ring with silicone lubricant (Foxboro Part Number 0048130 or equivalent). Verify that the O-ring is situated in the groove of the neck.

WARNING

Failure to reuse or install the proper O-ring for a CSA labeled product violates ANSI / ISA 12.27.01.

6. Feed the sensor cable through the housing neck into the electronics compartment.
7. Screw the housing onto the sensor neck until it bottoms. Do not over tighten. Be careful not to damage the sensor cable or dislodge the neck O-ring.

8. If your housing has an anti-rotation screw, engage the screw until it touches the sensor neck and back it off 1/8th turn. It is important that the screw is not touching the sensor. Fill the screw recess with red lacquer (Foxboro Part Number X0180GS or equivalent). the housing may then be rotated up to one full turn counterclockwise for optimum access.
9. If your housing has a retention clip, insert the clip over the boss in the housing neck so that the hole in the clip is aligned with the hole in the boss. Install the screw but do not tighten. Rotate the housing up to one full turn counterclockwise for optimum access. Tighten the retention clip screw and fill the screw recess with red lacquer (Foxboro Part Number X0180GS or equivalent). The housing can still be rotated for optimum access.
10. Reinstall the electronics module per Steps 6 through 9 in the previous procedure.

Adding the Optional Display

To add the optional display, refer to Figure 27 and proceed as follows:

1. Turn off transmitter power source.
2. Remove the electronics compartment cover by rotating it counterclockwise. Screw in cover lock if applicable.
3. Plug the display into the receptacle at the top of the electronics assembly.
4. Ensure that the O-ring is seated in its groove in the display housing. Then insert the display into the electronics compartment by grasping the two tabs on the display and rotating it about 10° in a clockwise direction.
5. Install the new cover (with a window) onto the housing by rotating it clockwise to seat the O-ring into the housing and then continue to hand tighten until the cover contacts the housing metal-to-metal. If cover locks are present, lock the cover per the procedure described in “Cover Locks” on page 19.
6. Turn on transmitter power source.

Replacing the Sensor Assembly

To replace the sensor assembly, refer to Figures 28 and 29 and proceed as follows:

1. Remove the electronics module as described above.
2. Remove the housing as described above.
3. Remove the process covers from sensor by removing two hex head bolts.
4. Replace the gaskets in the process covers.
5. Install the process covers and housing on the new sensor. Torque cover bolts to 100 N·m (75 lb·ft) in several even increments. Torque values are 68 N·m (50 lb·ft) when 316 ss bolts are specified; 75 N·m (55 lb·ft) when B7M bolts are specified.
6. Reinstall electronics module.
7. Pressure test the sensor and process cover assembly by applying a hydrostatic pressure of 150% of the maximum static and overrange pressure rating to both sides of the process cover/sensor assembly simultaneously through the process connections. Hold

pressure for one minute. There should be no leakage of the test fluid through the gaskets. If leakage occurs, retighten the cover bolts per Step 5 (or replace the gaskets) and retest.

CAUTION

Perform hydrostatic test with a liquid and follow proper hydrostatic test procedures.

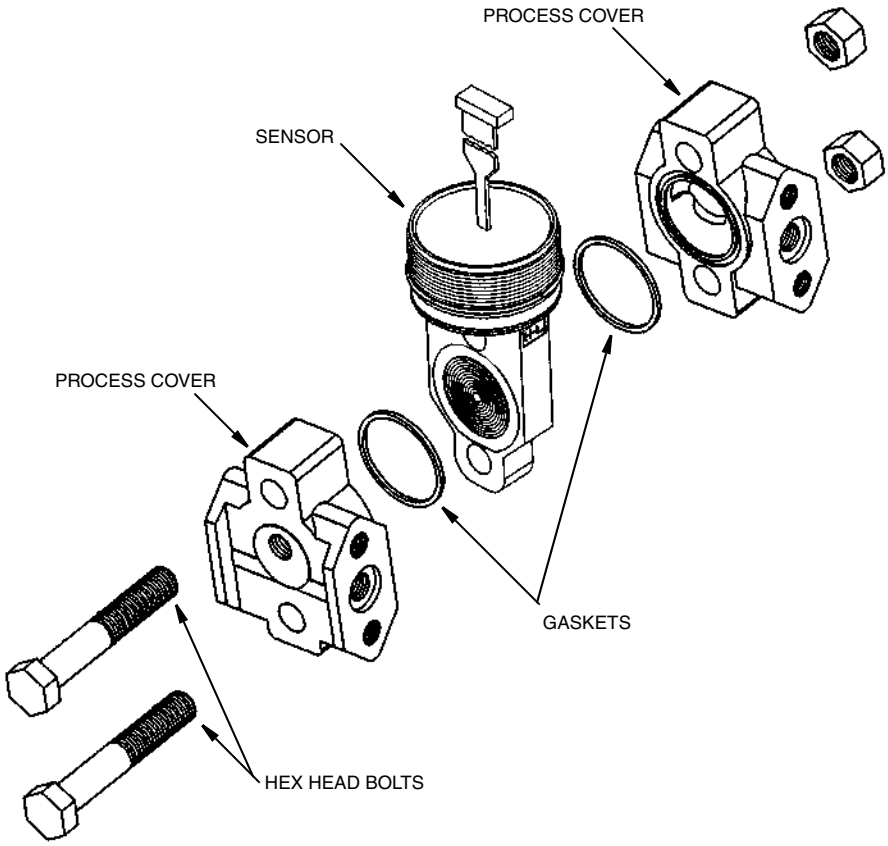

Figure 28. Replacing the Sensor Assembly

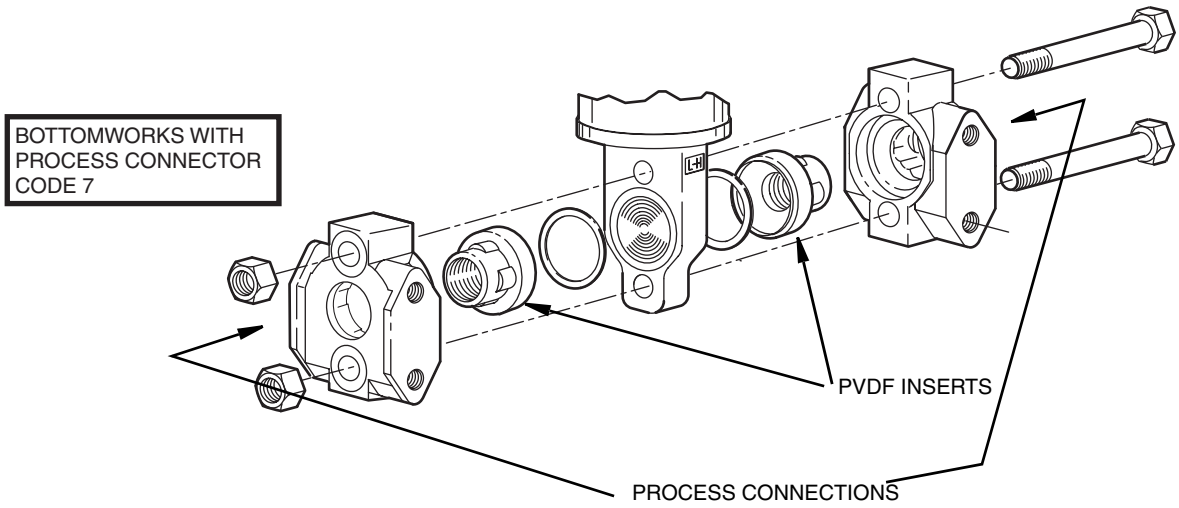

Figure 29. Replacing the Sensor Assembly (pvdf Inserts)

Rotating Process Covers for Venting

As received, your IASPT Transmitter provides sensor cavity draining without the need for side drain connections, regardless of whether the transmitter is mounted vertically or horizontally. Sensor cavity venting is provided by mounting the transmitter horizontally or with the optional vent screw (-V). However, if you did not specify this option, you can still achieve venting (instead of draining) with vertical mounting by rotating the process covers.

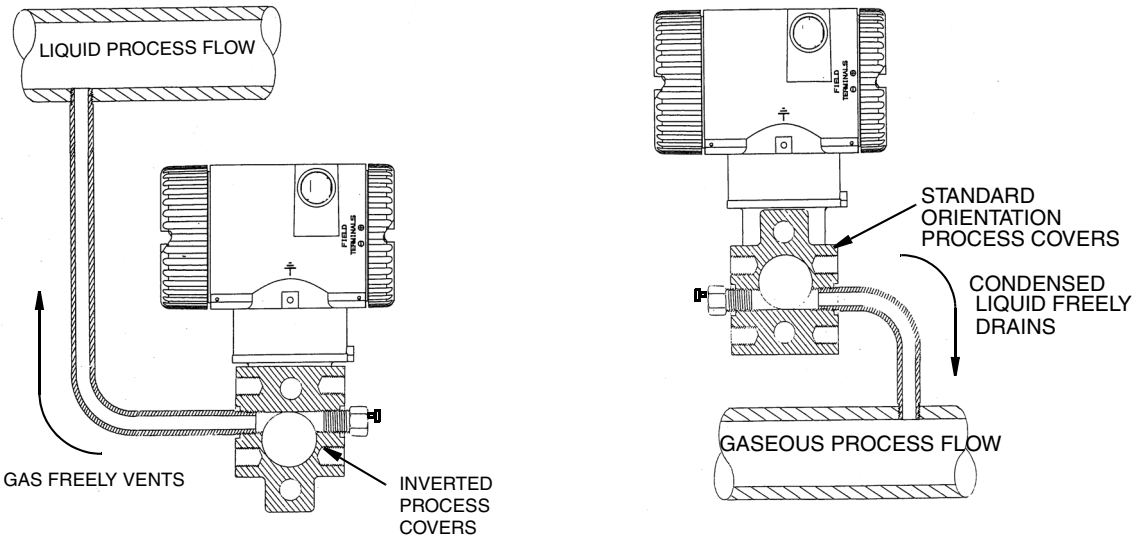

Figure 30. Sensor Cavity Venting and Draining

To rotate the process covers, refer to Figure 28 and proceed as follows:

1. Turn off the transmitter power source and remove the transmitter from the process.
2. Remove the process covers from sensor by removing two hex head bolts.

3. Replace gaskets in process covers.
4. Rotate the process covers so that the longer tab is at the bottom.
5. Reinstall process covers and bolts. Torque cover bolts to 100 N·m (75 lb·ft) in several even increments. Torque values are 68 N·m (50 lb·ft) when 316 ss bolts are specified; 75 N·m (55 lb·ft) when B7M bolts are specified.
6. Pressure test the sensor and process cover assembly by applying a hydrostatic pressure of 150% of the maximum static and overrange pressure (see "Standard Specifications" on page 4) to both sides of the process cover/sensor assembly simultaneously through the process connections. Hold pressure for one minute. There should be no leakage of the test fluid through the gaskets. If leakage occurs, retighten the cover bolts per Step 4 or replace the gaskets and retest.

! CAUTION

Perform hydrostatic test with a liquid and follow proper hydrostatic test procedures.

Index

C

Calibration
- Using a PC20 36
- Using a PC50 Configurator 36
- Using the Optional Local Display 36

Calibration Notes 31
Calibration Setup 33
Configuration 43
- Using a HART Communicator 44
- Using a PC20 44
- Using a PC50 Configurator 44
- Using the Optional Local Display 44

Cover Locks 19

D

Display, Positioning the 19

E

Error Messages
- Calibration 41
- Configuration 52

H

Housing, Positioning the 18

I

Identification 2
Installation 15

M

Maintenance 48, 55
Mounting 15

O

Operation Via Local Display 27

P

Parameters, Configurable 43

Parts Replacement 55
Piping, Typical Transmitter 16

R
Reference Documents 1

S
Specifications
    Product Safety 10
    Standard 4

W
Wiring 20
Write Protect Jumper, Setting the 19

Z
Zero Adjustment Using External Zero Button 39

ISSUE DATES
DEC 2001
OCT 2003
APR 2004
FEB 20-05
FEB 2006
AUG 2006
OCT 2007
JUL 2008
MAY 2010

Vertical lines to the right of text or illustrations indicate areas changed at last issue date.

Invensys Operations Management
5601 Granite Parkway Suite 1000
Plano, TX 75024
United States of America
http://www.iom.invensys.com

Global Customer Support
Inside U.S.: 1-866-746-6477
Outside U.S.:1-508-549-2424 or contact your local Invensys representative.
Email: support@invensys.com
Website: http://support.ips.invensys.com

Invensys, Foxboro, and I/A Series are trademarks of Invensys plc, its subsidiaries, and affiliates.
All other brand names may be trademarks of their respective owners.

Copyright 2001-2010 Invensys Systems, Inc.
All rights reserved

0510

The Clark Reliance Corporation

STORAGE AND HANDLING

Storage

Clark-Reliance Boiler Trim products should be stored in a dry and sheltered area prior to installation. The equipment provided may consist of electrical items that are intended for either indoor or outdoor use.

As a matter of good practice, dry storage will prevent the products from exposure to the outdoor elements. This will eliminate the potential for water damage.

The temperature of the storage area should not exceed 150 Deg. F (84 Deg. C) or drop below 32 Deg. F (0 Deg. C).

Handling

Your Clark-Reliance shipment has been carefully packed. However, the shipment may include spare parts, temporary water gages for "Boil-Out" purposes, maintenance instructions, and engineering drawings.

Upon receipt of the order, the equipment and the above items should be identified and verified against the packing list. Any documentation that has been provided should be directed to the appropriate personnel.

Care should be exercised as the items are uncrated. The shipment may contain fragile glass components. If any equipment appears to have been damaged from shipment, please contact your local Clark-Reliance representative or the factory, immediately.

VOGT POWER INTERNATIONAL	
Released, Work May Proceed	
Hugle, Kathy	Oct-17-2011

VOGT POWER INTERNATIONAL
V17460-ICXE-502-00
06-Oct-2011

16633 Foltz Industrial Parkway | Strongsville, OH 44149 | USA
Telephone: +1 (440) 846-7600 | Facsimile +1 (440) 238-8828|
Email: mmclaughlin@clark-reliance.com

Clark•Reliance
Instrumentation and Controls Group

Electro Eye Hye System Installation and Maintenance Instructions

Section: R500
Bulletin: 539CR2
Date: 9-3-2010
Supercedes: 539CR1

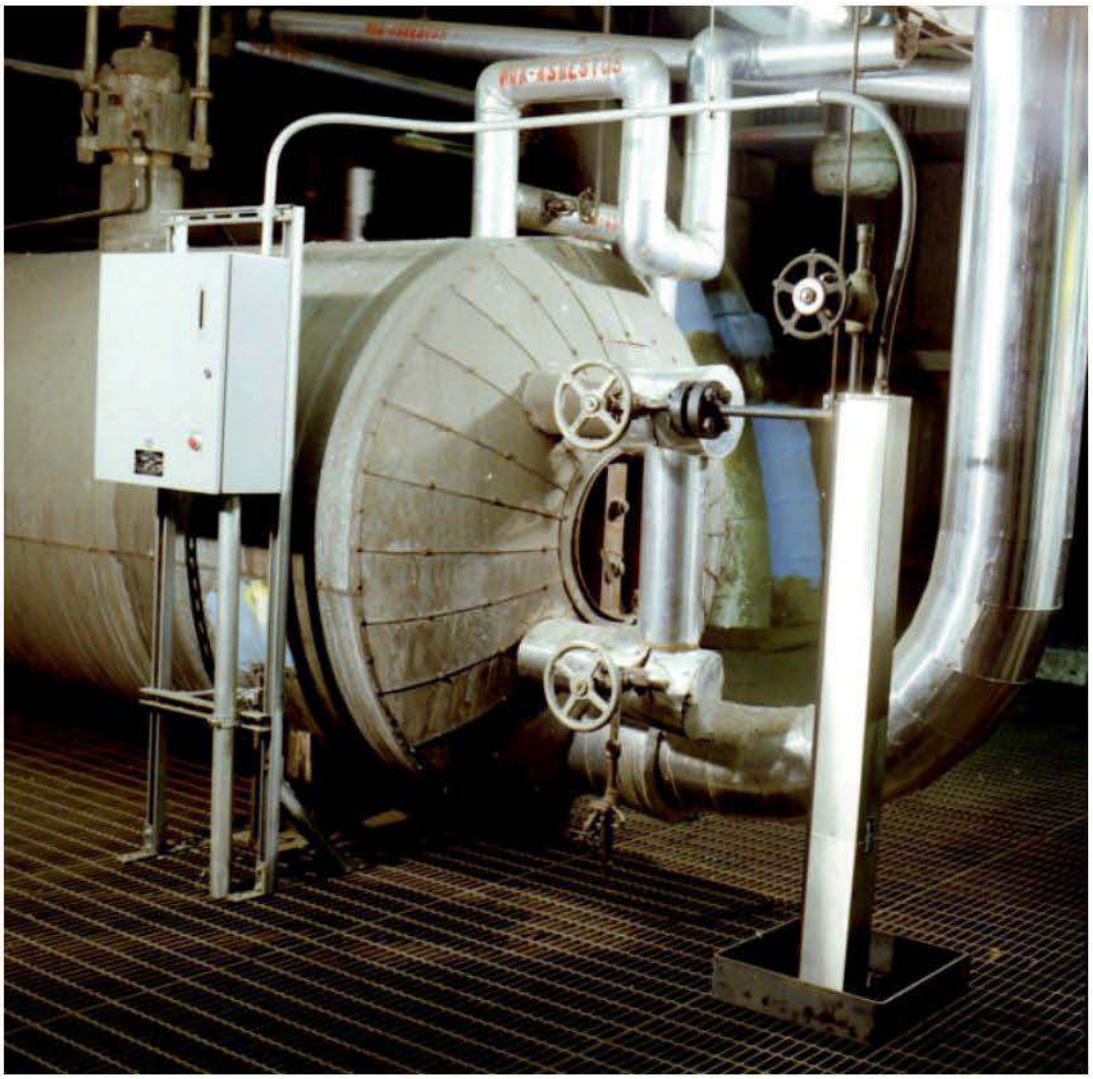

VOGT POWER INTERNATIONAL	
Released, Work May Proceed	
Hugle, Kathy	Oct-17-2011

VOGT POWER INTERNATIONAL
V17460-ICXE-510-00
06-Oct-2011

Table of Contents

SECTION	SUBJECT	PAGE
A.	Principle of Operation	3
B.	Components	4
C.	Unpacking and Inspection	4
D.	Hardware Installation	
	Electrolev Column	4
	Control Unit	4
	Remote Indicator Units	5
E.	Interconnecting Wiring	5
F.	Options	6
G.	Start Up and Operational Checks	9
H.	Maintenance	11
I.	Electrical Specifications	13
J.	System Power Consumption	15
K.	Trouble Shooting Guide	15

CAUTION !

The Electro Eye-Hye System has mains voltages present when the source power is connected. Take care at all times when the enclosure is open and power is applied.

Potentially dangerous pressures and temperatures are present when the Electrolev unit is in service. Insure isolation valves are closed and all pressure containing parts are vented to safe levels prior to beginning work.

If under pressure, the Levalarm should be isolated, or the boiler should be shut downbefore proceeding with the installation. Open drain valve to eliminate any trapped pressure. All installation steps should be performed by a qualified technician and should be executed in accordance with all applicable national and local codes.

REPLACEMENT PARTS WARNING

THE USE OF NON-ORIGINAL EQUIPMENT MANUFACTURER PARTS (SUCH AS GLASS, GASKETS, PROBES, MODULES, ETC.) WILL VOID THE AGENCY APPROVAL (FM, UL, CAS, CRN, ABS, ETC.) PRESSURE/TEMPERATURE RATING, AND WARRANTY OF THE EQUIPMENT. CLARK-RELIANCE REQUIRES THE USE OF OEM PARTS FOR ALL REPAIRS IN ON THIS PRODUCT IN ORDER TO MAINTAIN PLANT AND PERSONNEL SAFETY, AND RELIABLE OPERATION.

A.) Principle Of Operation

The **Electro-Eye-Hye** System utilizes the distinct electrical differences between water and steam to detect water presence. This is done by attaching a water chamber to a vessel (as a boiler steam drum) in which the water level is to be measured. The chamber will fill to the same level as the fluid in the main vessel.

This water chamber, called the **Electrolev** column, is fitted with a series of conductivity probes along its vertical length. Each conductivity probe is electrically connected to a detection circuit housed within the control unit. As the water level immerses the conductivity probes a circuit path is formed through the water and sensed by the detection circuits. Conversely, conductivity probes above the water level fail to provide an electrical circuit due to the relatively non-conductive properties of steam as compared to water.

The **Control Unit** contains the detection circuitry. As the detection circuits sense water presence, they operate control contacts within detector modules which provide indication and control functions.

The Eye-Hye System utilizes unique 'Multi-path' circuitry in which each conductivity probe is connected to its own dedicated detection circuit, control contacts and display drivers. Each circuit is enclosed in its own detector module housing. The power source for each detector module is individually fused to prevent the failure of any individual circuit from affecting other channels of the system. In addition to operational security, this provides for ease of maintenance, whereby a single channel can be repaired or replaced without needing to remove power from the entire system. A variety of supply power circuit arrangements are available to support the type and number of power sources the user requires.

Indication of the sensed water level is provided by lighted **Remote Indicators**. Two types are typically used: a single color vertical bank of lamps where a lighted red lamp indicates water and an unlit lamp indicates steam, or a bicolor display where a green lamp indicates water and a red lamp indicates steam. These indicators are typically placed at the control unit, feedwater or blowdown stations and in the control room.

Optional circuits for fault detection, analog outputs, fail safe, or redundant power distribution and latching pump control are also available.

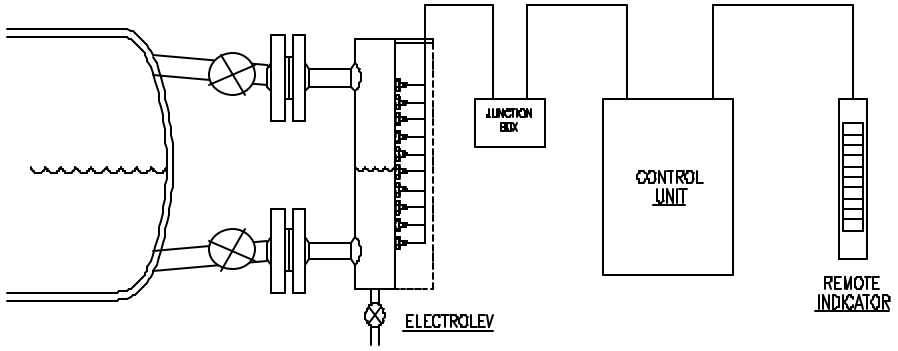

Fig. 1 EYE-HYE COMPONENTS & TYPICAL INSTALLATION

B.) Components:

The Electro Eye-Hye System consists of three primary items, which are:

1.) The Electrolev water column and Conductivity Probes.
2.) The Control Unit containing the Electro Eye-Hye electronic circuits.
3.) The local and remote Indicator(s) (type and number may vary based on system requirements).

C.) Unpacking and Inspection:

Upon receipt of the Eye-Hye System examine the containers for damage. Report any suspicious conditions as soon as possible to your carrier to avoid acceptance of damaged goods. Clark-Reliance will not be responsible for goods damaged in shipping or storage, or subsequent loss or damage due to improper storage or exposure as a result of damage to shipping containers.

Verify all materials are present as recorded on the Packing List provided with each shipment. Report any discrepancies to Clark-Reliance immediately. Have the Clark-Reliance order number and shipping waybill available at time of calling.

D.) Installation

1. The **Electrolev** should be installed on the boiler drum or vessel, as shown in Fig. 1. The distance between the Electrolev and the boiler drum should be kept to a minimum. A slope in the steam leg running from the drum or vessel towards the Electrolev of not less than 1 inch of fall for each 50 inches of linear length is recommended. The water leg should be installed with a downward slope running from the Electrolev to the drum or vessel. Care should be taken to insure no restriction or 'trap' occurs in the pipework which may lead to an accumulation of sediment, resulting in a restriction of flow to or from the Electrolev column. Isolation (Shut-off) valves should be installed to permit maintenance of the Electrolev while the vessel is pressurized. The standard vessel connections are 1" male pipe projections. Flanged or female socket weld connections are available options. A drain valve should be installed at the bottom of the Electrolev, as shown in Fig. 1. The standard drain connection on the Electrolev is 1/2" female socket-weld.

If the steam leg piping should be left exposed to encourage the formation of condensate flow to the Electrolev column (to promote heat transfer to minimize density related errors), it is recommended that shields or guards be fitted to reduce the risk of contact with hot surfaces. It is recommended that the water leg piping between the boiler drum and the Electrolev be insulated. Insulation will reduce the effects of cooling and will provide added personnel protection from hot piping. The Electrolev column may be insulated by field personnel, or with a Flexpak insulation jacket available from Clark-Reliance.

2. The **Control Unit** is provided in a variety of enclosures. Standard ECIL-**R model Control Units may be mounted up to 1000 feet away from the electrolev. The Control Unit should be mounted in an area that is accessible for inspection and below 150º F. Refer to the dimensional drawings specific to the materials ordered for mounting dimensions.

3. The **Remote Indicator(s)** should be mounted for ease of viewing by the operator in accordance with operational considerations and applicable codes. There is no practical distance limitation between the Control Unit and the Remote Indicator. All Remote Indicators are designed for panel mounting. Weatherproof enclosures are available for outdoor installations. Wall mounting brackets are also available from Clark-Reliance. Refer to dimensional drawings of specific products for panel cutouts and mounting dimensions.

E.) Interconnecting wiring:

1. Field Wiring from the Electrolev is terminated in the Control Unit at connector SK3. Connections should be made as illustrated on the field wiring diagrams provided for the specific equipment ordered. The Electrolev is furnished with a 30" length of high temperature wire leads exiting from the conduit connection. Longer leads are available as an option and may have been furnished on request.

Model	Wire Specifications
EL450, EL1000	18 GA. Stranded Teflon insulated conductors rated at 300 VAC and 200ºC / 392ºF
EL1800, ELF3000	18 GA. Stranded Teflon-treated glass braided rated at 600 VAC and 450ºC / 842ºF Nickel coated copper Conductor - UL #5107

High temperature probe to junction box wire specification

The high temperature probe wires should be routed to the Control Unit or a junction box (furnished by C-R, when specified).

Low temperature Multi-conductor cable may be routed from the junction box to the Control Unit. The number of required conductors is equal to the number of conductivity probes, plus one for the common connection. For example a twelve probe Electrolev would require 13 conductors. (note: for increased reliability a termination for a redundant common wire to the Electrolev is provided at the Control Unit. An additional conductor would be needed if this feature is employed.)

Model	Wire Specifications
EL450, EL1000, EL1800, ELF3000	18 GA. Stranded (Tinned Copper) PVC insulated, rated at 300 VAC and 60º C / 140º F

Junction box to control unit wire specification

2. The power connection to the Control Unit is suitable for 12 to 20 GA. wire. The power terminals provide for single or dual power source connections. Connect AC power source to SK4 L1A & L2A for single power source operation or when using the Power Source Diverter option. For split power source operation where one of two sources supply power to the odd or even channels, remove on board jumpers J1 & J2 and connect source #1 to SK4 L1A & L2A and source #2 to SK4 L1B & L2B.

3. Between the Control Unit and the Remote Indicator(s) the number of conductors required for a Remote Indicator equal the total number lamps plus one for a common conductor. For example, an MTI-12B Remote Bicolor Indicator has 12 red lamps, 12 green lamps, and one common. Therefore, 25 conductors are required. Connections for Remote Indicators are made at SK1 terminals 1 to 39. Refer to the Remote Indicator field wiring diagram furnished with the system for connections relating to the equipment supplied. Indicators may be wired in parallel, for multiple indicator installations. All Remote Indicators are powered with 24 VAC from the Control Unit

Model	Wire Specifications
All :STI, MTI & SMI models	18 GA. Stranded (Tinned Copper) PVC insulated, rated at 300 VAC and 60º C / 140º F (Belden #8468 or equal).

Remote indicator wire specification

4. Alarm and trip wiring is provided at SK2 terminals 1 to 36. A single form "C" contact is provided for generation of control and alarm functions for each channel. Contacts are rated at 5 Amp @ 120/240 VAC or 1 Amp @ 120 VDC., 5 Amp @ 30 VDC. Inter-connections between multiple channels can be made for various fail-safe or voting logic methods. Additional alarm and trip contacts can be obtained by using the contacts associated with the Remote Indicator circuits when no Remote Indicator is employed. *Insure that jumpers J4 through J15 are removed before using remote display driver circuits for alarm or trip functions.* Refer to the specific equipment assembly drawings provided with your system for further information on this feature. (Note: consult Clark-Reliance prior to using this feature).

F.) System Options

(Note: Refer to fig. 5 for location of system components.)

1. The **Flexpak Insulation** jacket provides a flexible insulation wrap for the Electrolev Column. This reduces heat loss and protects against accidental contact with hot surfaces on the Electrolev. The Flexpak can be specified with the original order, or ordered to retrofit an existing system. Flexpak jackets are designed for easy removal or installation with Velcro fasteners. When ordering for retrofit applications specify the serial number of the existing Electrolev. This information is located on the nameplate which is attached to the probe housing. The serial number will enable Clark-Reliance personnel to specify properly the Flexpack jacket for your application.

2. **Test Switch Circuits** are provided to enable operators / users to test indicator lamps and all relay circuits. On ECIL-**R models the test function is performed with an accessory printed circuit board attached to the PL 1 connector on the main control board. This board is field wired to a momentary normally open push button. The push button is furnished in a weather resistant enclosure for convenient mounting. 18 Ga. wire is sufficient for Test Switch interwiring. Refer to actual wiring diagrams for more details.

3. Models PSD-120 and PSD-240 **Power Supply Diverters** are designed to provide for continued operation of the Electro Eye-Hye with no loss of performance even in the event of the loss of a main power source. The primary source (A) will power the entire system under normal operating conditions. In the event of a power failure, the PSD diverts the power to the secondary source (B), and continues to power the system. When source (A) is restored, the PSD automatically switches back to source (A). A typical installation is illustrated in Fig. 2 below.

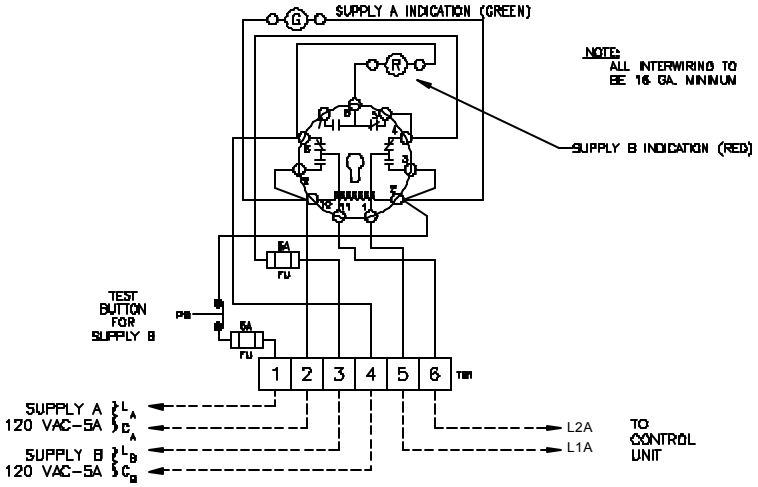

Fig. 2 Power Supply Diverter Wiring

4. The **Fault Detector** board (part # ECID-69/70) provides self diagnostic functions for the Eye-Hye Control Unit. This board plugs in by use of a ribbon connector to PL 2 on the main board and is mounted on the system's option DIN rail. AC power is connected at TB1 and can be connected to main board power at SK 4 or an independent AC source circuit based on design considerations. The microprocessor based unit performs full time examination of the Eye-Hye system to identify and provide alarm outputs for failures in the probe detection or power system. This checking is done completely separate from measurement and control functions. Unlike systems that use the same circuitry for measurement and fault detection, the Eye-Hye system is secure from "common-mode" circuit failures. A circuit failure in the control portion or the fault detection portion of the Eye-Hye will not go undetected or cause additional failures in the opposite circuits.

The Fault Detector board provides an integral slidewire analog output which is automatically ranged to 100% of the level measured in the Electrolev. The slidewire output is provided at TB 2. Consult option schematics for connection details.

5. The **System Exerciser** Box (part # ECID-71) is a set of toggle switches which provides a simulated electrode input to the Control Unit. The box is plugged into mainboard connector PL 1. With the Electrolev column drained or electrically isolated by removing connector SK 3, the switches on the System Exerciser Box can be toggled to simulate steam or water states, facilitating system checkout or analog calibrations.

6. The purpose of **Dead Band Relays** is to allow the user to enable an alarm or control function to be "turned on" at one level and to be "turned off" at another level. When dead band relays are specified, the Control Unit will be furnished with two additional relays, and all auxiliary contacts wired to terminal blocks. The Dead Band Relays will be identified on the Control Unit diagram as D.L. (Dead Low) and D.H. (Dead High). They will be as illustrated below in Fig. 3.

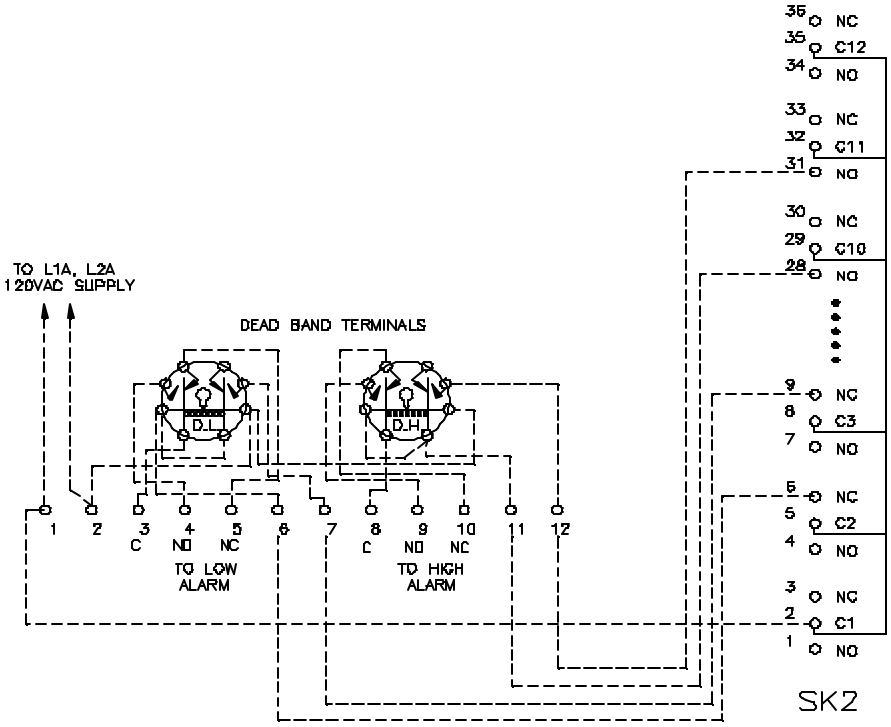

Fig. 3 Dead Band Wiring

The above example is wired to illustrate a high alarm when the water reaches the 11th probe, and will de-energize the alarm when the water drops below the 10th probe. The low alarm will be energized when the water drops below probe #2 and will remain energized until the level rises to the probe #3. The user may select a broader range between actuation levels to suit the operation.

7. The **4-20 mA Output Transmitter** (part # RPC-27) has been pre-wired at the factory to provide a digital signal output. This signal corresponds to the level in the Electrolev column. The output has been adjusted to provide equal increments of change between input levels.

The transmitter PC board has been designed with 21 field adjustable potentiometers (see Fig. 4). One potentiometer has been provided to fine tune the 4-mA output with no level in the electrolev (1). The remaining 20 potentiometers are numbered from 1 to 20. They correspond to the conductivity probes in sequence from the lowest to the uppermost (2). For example , if a 10 probe system is employed, then potentiometers #1 through #10 will be used.

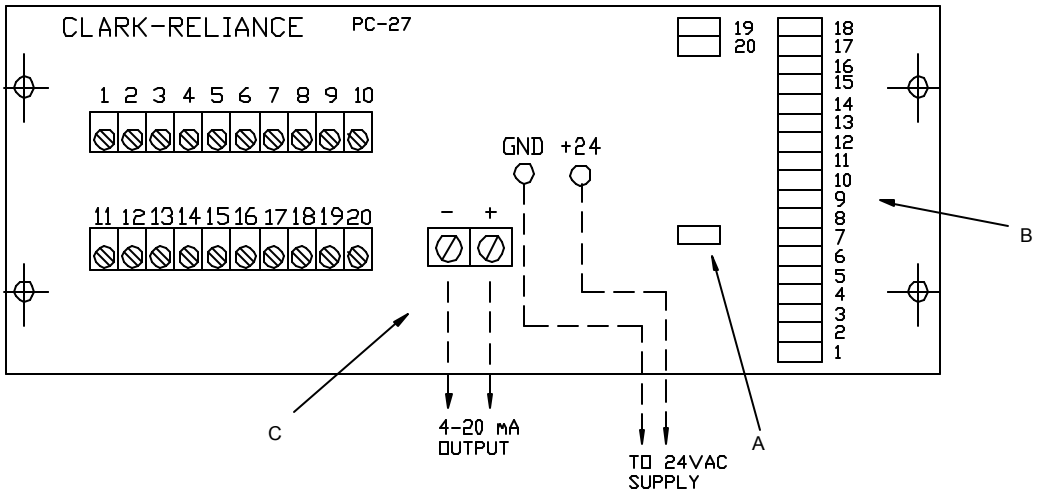

Fig. 4 4-20mA Output P-C Board

The adjustment procedure is as follows:

1. Isolate the 120 VAC supply from the control unit.
2. Valve out and drain the Electrolev.
3. Verify all the Probe leads from the Control Unit to the Electrolev.
4. Attach an ammeter to the signal output terminals (C) in proper polarity.
5. Return the 120 VAC supply to the control unit. At this time, no relays will be energized.
6. Adjust the potentiometer in the center (A) to obtain 3.85 mA on the meter.
7. Turn off 120 VAC supply.
8. Add a jumper wire from Electrolev probe #1 terminal to the Electrolev common. This will cause relay #1 to energize.
9. Restore power and adjust #1 potentiometer to desired output level.
10. Remove power and add next jumper from Electrolev Probe #1 to Probe #2.
11. Restore power and adjust #2 potentiometer to desired level.
12. Repeat the procedure used on probes #1 and #2 for each remaining probe, and adjust output levels until complete.
13. With power off remove all jumpers.
14. Return unit to service.

G. Startup and Operational Checks:

CAUTION !

The Electro Eye-Hye System has mains voltages present when the source power is connected. Take care at all times when the enclosure is open and power is applied.

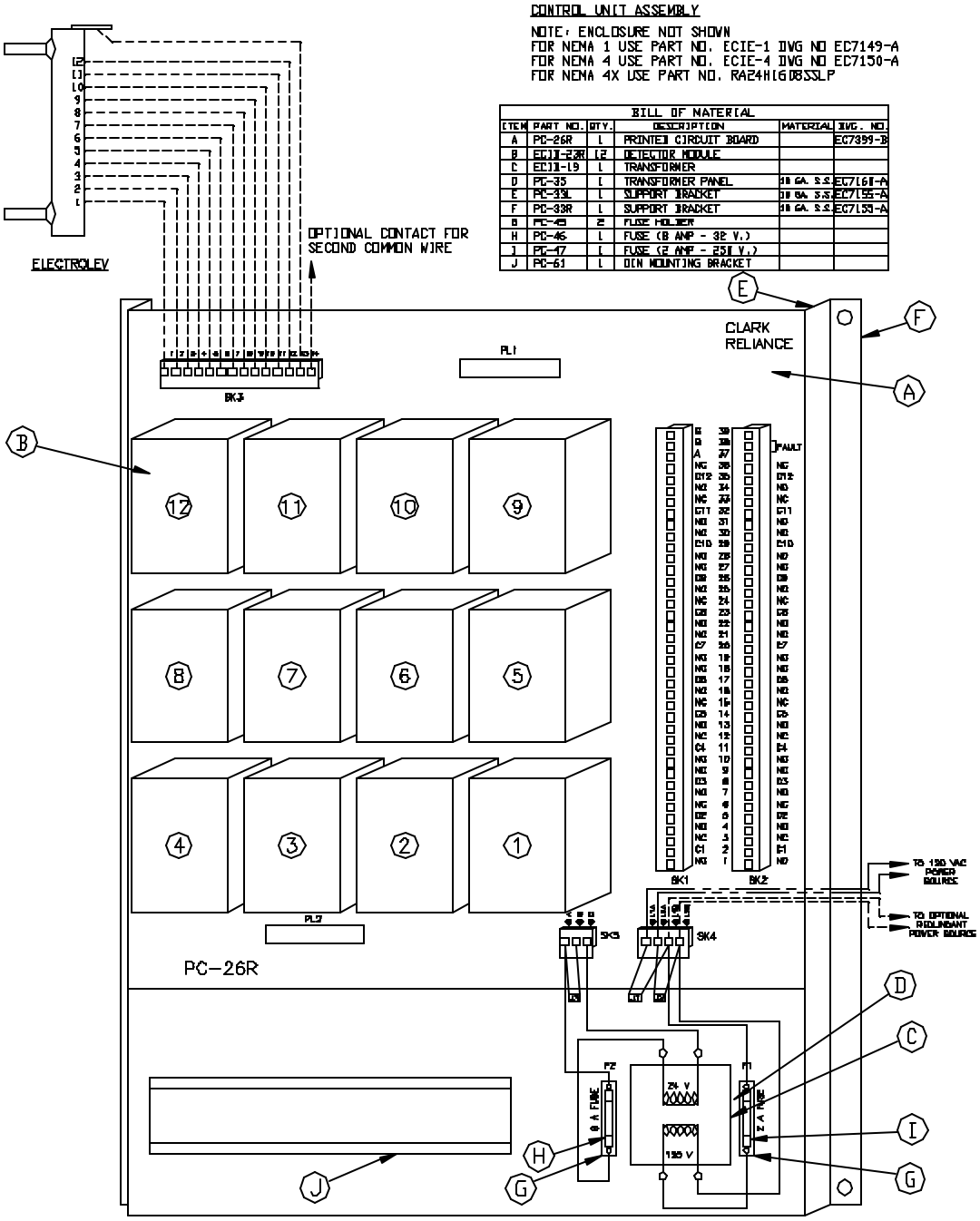

Fig. 5 Typical Control unit component arrangement (ECIL12R shown)

Electrolev Commissioning: Initial warm-up of the Electrolev column should be done gradually. To do this, keep the water valve closed, open the drain valve widely, and crack open the steam valve for a few minutes. Then, close the drain valve, and slowly open the steam and water valves fully. Check for any leakage at the conductivity probes.

Hot-torquing is recommended on all installations. After initial warm-up, the Electrolev column should be isolated and the drain valve opened. After insuring the column is drained and pressure relieved, re-torque T, V, or Z type probes to 40 Ft Lb., (54 Newton-Meters) and F type probes to 90 Ft Lb. (122 Newton-Meters) After torquing is complete, close the drain valve and return the Electrolev to service. Hot-torquing of the conductivity probes insures proper sealing and extends the sealing gasket life. Note: FSB probes do not require hot-torquing.

Control Unit and Remote Indicators: Verify all wiring is in accordance with drawings for the specific model Electro Eye-Hye and any installed options purchased. Remove the two tubular glass fuses at the power transformer and apply source power to the system. Verify AC source power is within specifications. Verify transformer output between source side of 8 amp fuse and SK 5 terminal "C" is between 24 and 32 VAC. Remove source power and install fuses. Re-apply power and observe the system is energized at the Local (if supplied) and Remote Indicators. Isolate the Control Unit from the Electrolev by removing SK 3 from the main board mating plug. By using the optional System Exerciser Box (see instructions provided with unit) or individually shorting between SK 3 terminal 13 and each of the terminals 1 through 12 in sequence verify a change of the detector status from steam to water by the illumination of the internal red LED within each of the detector modules and an indication of water on any Local and Remote Indicators. Remove all jumpers or System Exerciser Box and re-connect SK 3. Verify all indications agree with water level in the Electrolev.

H. Maintenance

1. **Cleaning:**

Blow down of the Electrolev column should be performed as needed to clear any accumulations of debris in the column and pipework. Blow down should be conducted weekly or less frequently, based upon water quality. Blow down is performed correctly by closing the water valve and slowly opening the drain valve for approximately 15-30 seconds. A brief blow down is sufficient. Excessive blow down may shorten the life of the probes.

2. **Probe Replacements:**

Clark-Reliance probes require very little maintenance. We suggest weekly blow downs of the water columns to prevent the build-up of contamination on the probes. A bypass switch can be installed on fuel cutout circuits. This switch will prevent a false trip during blow-down. The blow-down procedure is conducted thoroughly by closing the water valve and opening the drain valve slightly for about 20 seconds. (Refer to Clark-Reliance Form E156-B, "Recommended Blow-Down Practices for Water Columns, Electrolevs, and Water Gages)

If blowing-down of the column does not clean the probes sufficiently, use a stainless steel wire brush or fine emery cloth to clean the stainless steel rod portion of the probe. To clean the insulator, use a soft cloth and a mild detergent.

If probes are removed at any time for replacement or inspection, the sealing gasket must be replaced. Probe replacement kits are furnished with two spare gaskets. The gasket part numbers are as follows:

Probe Type	Gasket part Number
T	WCM-13
V	X175500 (Formerly E10-10)
ZG	E10-10S
FG	E10-10S

Replacing the probes:

1. Close both steam and water valves and drain the column before starting probe maintenance.
2. Remove probe to be inspected or replaced, after the column has cooled.
3. When replacing the probes, coat the threads lightly and uniformly with a high temperature anti-seize type lubricant such as 'Never-Seize', 'MolyCote G' or 'Fel-Pro C'
4. Torque the probes as follows:
    - Type T, V, ZG or ZB to 40 Ft-Lb. (54 Newton-Meters)
    - Type FG or FB Probes to 90 Ft-Lb. (122 Newton-Meters)

Hot torquing is suggested for all probes (except FSB). However, the column *must* be isolated from service with the drain valve open *before* re-torquing the probes.The hot torquing procedure will extend probe sealing gasket life and should be
performed as follows:

1. Partially open *steam* valve to warm up the column with the drain valve slightly open.
2. Close steam (and water) valves to isolate the column.
3. Open the drain valve completely.
4. Re-torque as instructed above.
5. Return to service by closing the drain valve and opening the steam and water valves.

<u>Note</u>: When installing the high temperature wire to the probe, use an open end wrench to prevent the probe assembly from turning while tightening the wire terminal nut. Use a ¼" wrench for both the compression nut and the terminal nuts on T and V type probes. ZG and FG type probes require a ½" wrench for the compression nut and a 3/8" wrench for the terminal nut.

Assembly Instructions for Model FSB Compression Type Probes

1) Remove the probe wire by loosening the terminal nut with a 3/8" wrench.
2) Insert Model FSB probe into compression fitting adaptor. Make sure that the sealing surface on both the probe and the fitting adaptor are free of any debris.
3) Do not lubricate threads on either the nut or the fitting adaptor.
4) Place the coupling nut on to the probe turn on until hand tight. Then, using a 1 1/8" wrench, turn the nut an additional 1/4 turn. No specific torque value is required.
5) The coupling nut must be replaced when a new probe is installed. A new coupling nut is furnished with each replacement probe.
6) Replace the probe wire, lock washer, and terminal nut. Note: use a 1/2" wrench to hold the Probe Assembly Nut from rotating while tightening the Terminal Nut.
7) Hot torquing is not required with Compression Type Probes.

3. **Control Units**

Control Units require no maintenance. Test switches may be activated at any time.

4. **Indicators**

The standard type (STI Series) Indicators utilize 30 volt incandescent lamps, C-R part no. LI2-5B, or LED style lamp, part no. LI2-9. Indicators that are of the sub-miniature or miniature models employ LED's and contain no replacement parts.

I. Electrical Specifications

Enclosure Design: NEMA 1 (standard)
NEMA 4, 4X & 7 (optional)

Temperature Rating: -40 to +150ºF / -40 to 65ºC

Supply Voltage: 120 VAC 50/60 HZ (standard) 240 VAC 50/60 HZ (option)

Supply Current: 4.4 VA

Contact Design: DPDT (2 form C)

Contact Ratings: 5A @ 120, 240 VAC, 5A. @ 30 VDC., and
1A. @ 120 VDC.

Contact Life: Mechanical - 5 million operation Electrical - 100,000 operations min. at full load.

Probe Circuit Current: 1.5 mA @ 12 VAC per probe.

Sensitivity: 50,000 Ohms

Listing: Factory Mutual #2N2A4.AF, CSA # LR14001, and UL listed Detector Modules

SPECIFICATIONS

Control Design: Solid State components enclosed in a clear Lexan plug-in style housing. Housing carries no NEMA rating.
Contact Design: DPDT (2 form C): two normally open (N.O.) and two normally closed (N.C.) non-powered contact.
Contact Ratings: 5A @ 120, 240 VAC resistive, 1/10 H.P. @ 120, 240 VAC, 5A @ 30 VDC.
Contact Life: Mechanical – 5 million operations. Electrical – 100,000 operations minimum at rated load.
Supply Voltage: 24, 120, and 240 VAC models 10%, minus 15%, 50/60 Hz.
Supply Current: 24, 120, and 240 VAC, Relay energized 4.4 VA
Secondary Circuit: 12 VAC RMS voltage on probes, 1.5 milli-amp current.
Sensitivity: Models operate from 0 – 100,000 OHM maximum specific resistance.
Temperature: -40 to 150° F. ambient.
Terminals: All connections #6-32 screw type terminals with pressure clamps
Listings: U.L. listed, Industrial Motor Control (508), CSA approved Industrial Control.
LED Terminal Output: Probe in water, +12VDC, Probe out of water, -12 VDC.

ECID-__R Control Relay Module Information

SUFFIX	SENS. (ohms)	MODE	SUPPLY
-22R	26K	DIRECT	120VAC
-23R	50K	DIRECT	120VAC
-24R	100K	DIRECT	120VAC
-25R	26K	INVERSE	120VAC
-26R	50K	INVERSE	120VAC
-27R	100K	INVERSE	120VAC
-28R	26K	DIRECT	24VAC
-29R	50K	DIRECT	24VAC
-30R	100K	DIRECT	24VAC
-31R	26K	INVERSE	24VAC
-32R	50K	INVERSE	24VAC
-33R	100K	INVERSE	24VAC
-116	26K	DIRECT	240VAC
-56R	50K	DIRECT	240VAC
-121R	100K	DIRECT	240VAC

For other relay models, please contact the factory.

INSTALLATION

- Install octal socket in appropriate enclosure using two (2) #6 or #8 metal screws.
- Wire control per wiring diagram, following N.E.C. and local codes.
- Install control module in socket.

SENSITIVITIES VS MAXIMUM PROBE WIRE DISTANCE

SEN. (K ohms)	DISTANCE (ft.)
26	2,200
50	1,075
100	570

DIMENSIONAL DIAGRAM

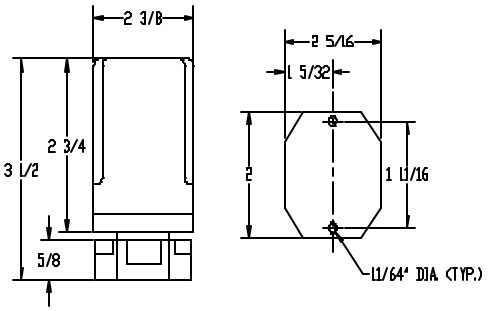

USE COPPER (60/75°C) WIRE ONLY. TORQUE TO 20 INCH POUNDS.

J. System Component Supply Current:

Part #	Component	Current @ 120 VAC
ECIL-10R	Control Unit	.37 A
ECIL-12R	Control Unit	.44 A
ECIL-20R	Control Unit	.74 A
SMI-10BR	Sub-Miniature Indicator	.04 A
SMI-12BR	Sub-Miniature Indicator	.04 A
SMI-20BR	Sub-Miniature Indicator	.06 A
MTI-10	Miniature Indicator	.09 A
MTI-12	Miniature Indicator	.10 A
MTI-20	Miniature Indicator	.18 A
MTI-10B	Miniature Indicator	.09 A
MTI-12B	Miniature Indicator	.10 A
MTI-20B	Miniature Indicator	.18 A
STI-10	Standard Indicator	.38 A
STI-12	Standard Indicator	.45 A
STI-20	Standard Indicator	.76 A

K. Trouble - Shooting Guide

Symptom	Probable Cause	Corrective Action
1. Indicator Lamp illuminated above level, or remains on during blow-down	1 A) Failed/Short-circuited probe	1 A) Remove probe and clean if contaminated, or replace if leakage is detected.
	1 B) Shorted/Open circuit in field wiring	1 B) Check all wires and connections for short circuits and proper connections
2. Indicator lamp out at any level	2 A) Single Lamp failure on STI Series indicator	2 A) Replace lamp P/N: LI2-5B
	2 B) All Indicators not illuminated due to power out or loss of signal or ground wire.	2 B) check 8 amp fuse on power panel in control unit. Verify all wiring and terminations.
	2 C) Single LED not illuminated on models with LED indicators, problem is either failed LED, faulty detector module or wiring problem.	2 C) Replace detector module. Verify all wiring and terminations. Replace remote display (unit is not field repairable)
3. Control circuits inoperative	3 A) faulty detector module or open wiring circuit	3 A) Replace detector module. Verify all wiring connections.

Consult the factory or your local Clark-Reliance Representative with any questions. Technical questions can be promptly answered, if the caller provides the system serial number (Example EE - _ _ _ _ _) or the drawing numbers.

Clark•Reliance®

Notice to Plant Operators

The use of non-Original Equipment Manufacturer parts (such as glass, gaskets, probes, modules, etc.) will void the Agency Approval (FM, UL, CSA, CRN, ABS, etc.), pressure/temperature rating, and warranty of this equipment. Clark-Reliance requires the use of OEM parts for all repairs on this product in order to maintain plant and personnel safety, and reliable operation.

"PARTS-PLUS"

Critical spare parts for overnight delivery, direct from the manufacturer.

clark-reliance.com/parts

Steel Valve Repair Kit

Replacement Probes

Gage Glass Repair Kit

Simpliport Module

Simpliport Packing Nut

Replacement Relays

Probe Repair Kit

Replacement EA100

Replacement Micro-switch

Bronze Valve Repair Kit

Valve Packing

Replacement Floats

16633 Foltz Parkway Strongsville, OH 44149 USA
Phone (440) 572-1500 Fax (440) 238-8828
sales@clark-reliance.com www.clark-reliance.com

Maintenance Instructions
FORGED STEEL GAGE VALVES
SG700 and SG800 Series

To Repack Valves (Valve must not be under pressure)

1. Isolate valves from pressure.
2. Open drain valve to eliminate any potentially trapped pressure.
3. Remove stem bushing locking means; a) If set screw, loosen to clear bushing threads; b) If lock weld bead, file off or cut with hacksaw.
4. Remove stem, stem bushing, packing yoke, and *all* old packing material.
5. Install new packing cartridge(s). Use SG854-4 stem packing cartridge for stem applications, and SG854-5 nipple packing cartridge on valve models with nipple connections for the water gage.
6. Install packing washer, yoke, stem, and stem bushing.
7. Retighten stem bushing locking set screw.
8. Replace yoke and cap screws lubricated with Molykote "G", or equal and tighten with a 5/8" open-end wrench to avoid over-torquing and stem binding.
9. Crack open valves to allow gradual warm-up of gage glass for several minutes.
10. Close drain valve and further tighten packing yoke screws, if necessary, to stop leakage.
11. Open valves and check again for leakage once valves and packing have reached full operating temperature.

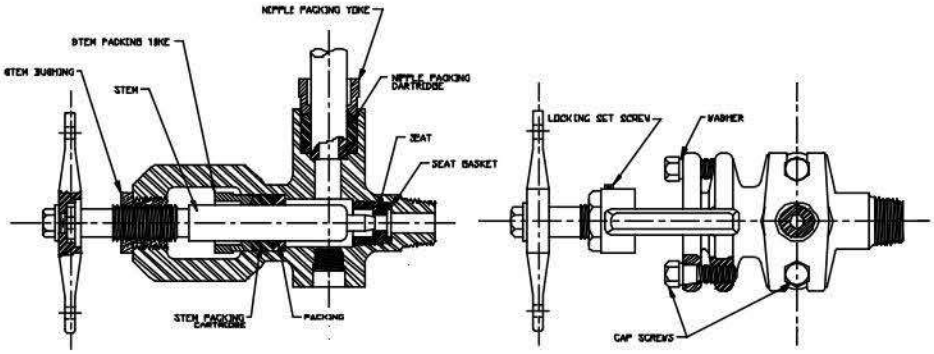

To Replace Seat (Valves must not be under pressure)

1. Isolate valves from pressure.
2. Open drain valve to eliminate any potentially trapped pressure.
3. Remove stem bushing locking means; a) If set screw, loosen to clear bushing threads; b) If lock weld bead, file off or cut with hacksaw.
4. Remove stem, stem bushing, packing yoke, all old packing, and packing washer
5. Insert a 3/4" socket with an extension into the valve body, onto the valve seat and remove valve seat by rotating counter-clockwise. Note: old style valves contain a separate valve seat and seat holder. Remove seat holder with a 1/2" socket extension.
6. Lift out seat and seat gasket. Dispose of the gasket.
7. Clean and lubricate threads of seat with Molykote "G" or equal.
8. Install new seat gasket and new seat. Tighten seat using 40 ft.-lb. torque.
9. Install packing washer, yoke, stem, and stem bushing.
10. Lubricate threads of stem and cap screws with Molykote "G" or equal.
11. Repack stem as described. Retighten stem bushing locking set screw. Be sure to check for leakage and re-tighten cap screws (if necessary) shortly after boiler is returned to service.

Clark•Reliance®
16633 Foltz Industrial Pkwy., Strongsville, OH 44149 USA
Telephone: (440) 572-1500 Fax: (440) 238-8828
www.clark-reliance.com

Clark•Reliance®

BOIL-OUT GAGES PRACTICE AND POLICY

On new boiler installations it is common procedure initially to operate the boiler at a reduced pressure for a short time in order to cook out foreign materials (pipe joint compound, grease oil, flux, etc.) that remain in the drum or other pressurized parts of the system after the boiler has been constructed. During this boil-out period most of the suspended or dissolved debris is flushed out with blowdown discharges. However, a small amount of residue is unavoidably deposited as a film on all internal, wetted surfaces. .. including those of the water level gage. This type of scum layer is nearly impossible to remove by blowing down the gage, particularly if the gage glasses are protected by mica shields, as they must be, in high pressure installations.

As a practical matter, it is more expedient to employ an inexpensive temporary level gage (which can be discarded or returned after the boil-out procedure), rather than to use and then rebuild the gage intended for regular service. For boil-out purposes on new water columns and direct-to-drum gage assemblies, Clark-Reliance

provides temporary level gage at no charge or at a refundable charge under one of the following conditions:

1. When a Prismatic gage, flat glass gage or Simpliport gage, having 3/4" diameter end nipples, is supplied as part of a water column or direct-to-drum assembly, we automatically furnish for temporary boil-out service the following parts at no charge:

   1 pc. — ¾" OD tubular gage glass of proper length

   2 pc. — Rubber packing rings (*)

   1 pc. — Low visibility tubular shield (so that low vision level in the tubular gage is same as in the gage that will be used for regular service).

At the conclusion of the boil-out procedure all of the above parts should be discarded. When the gage having stainless steel nipples is then installed, it is essential that the appropriate (non-rubber) packing rings are used, to assure durable sealing of the stainless steel nipples.

2. When a gage having flanged connections is supplied as part of a water column or direct-to-drum assembly, and the boil-out pressure will not exceed 200 PSIG, we will furnish the following parts at no charge:

   1 set — VB-991 gage valves with ½" NPT conn.

   1 pc. — 5/8" OD tubular gage glass of proper length

   1 pc.— Low visibility shield

The boil-out gage valves should be temporarily installed in the 1/2" NPT "Test" connections in the flanges of the regular water gage shut-off valves, which are on the water column or direct-to-drum assembly. This equipment may be discarded after the boil-out has been completed.

3. On installations like the above but where boil-out pressures will exceed 200 PSIG, the following are recommended for temporary service:

   1 set — RV1-113 gage valves with ½" NPT conn.

   1 pc.— RLR-110 reflex gage of proper visibility (t * =No. of sections and size of each)

The cost of this assembly will be listed separately on our order invoice. However, full credit will be issued upon its return to Clark-Reliance.

* Bronze valves are supplied with rubber packing rings. These are to be used for the boil-out procedure. Steel valves are supplied with packing cartridges and separate rubber packing rings (to be used for boil-out).

VOGT POWER INTERNATIONAL
V17460-ICXE-512-00
06-Oct-2011

VOGT POWER INTERNATIONAL	
Released, Work May Proceed	
Hugle, Kathy	Oct-17-2011

For additional information contact your local Clark•Reliance representative

Clark•Reliance®

16633 FOLTZ INDUSTRIAL PARKWAY • STRONGSVILLE, OHIO 44136 • USA
TELEPHONE: +1-440-572-1500 • FACSIMILE: +1-440-238-8828

Note: Clark Reliance shall not be liable for damages of any kind resulting in part from failure to install its products in accordance with all applicable codes and/or state and local regulations, improper application and/or maintenance

Illustrations that show how Boil-out gage assemblies are to be used on water columns or Direct-to Drum Units having flanged gage connections.

The boil-out gage per Fig. 2A or 2B should be temporarily installed on the gage valves flanges per Fig. 3A or 3B, until the boil-out procedure is finished. Then the flanged gage per Fig. 1A or 1B should be installed for regular service.

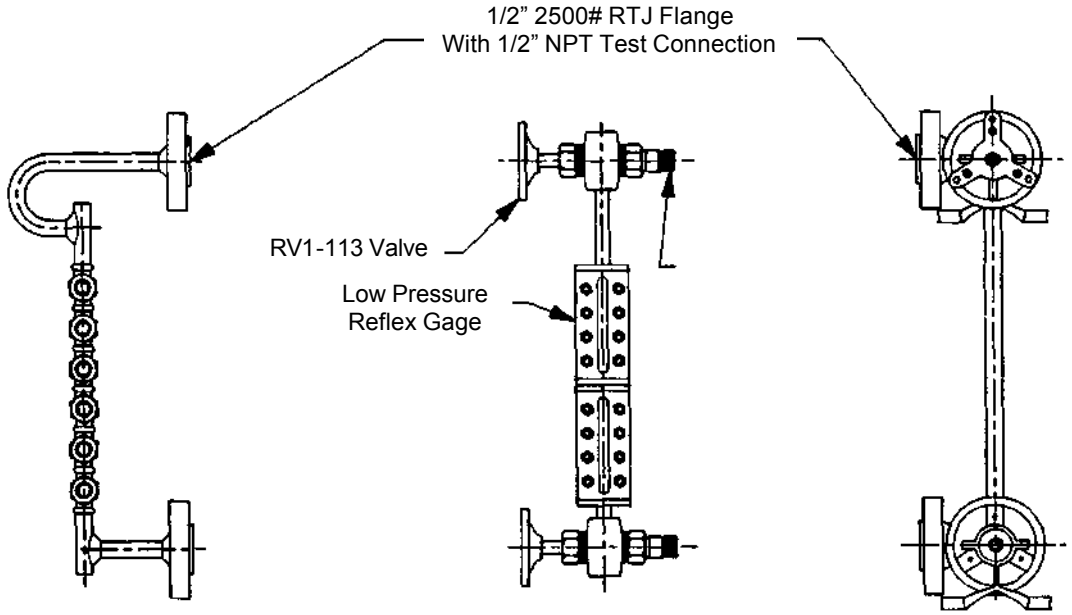

Fig. 1A
Simpliport with
flanged gage conn.

Fig. 2A
Steel Valves and Reflex
Gage for Boil-out service

Fig. 3A
Direct-to-Drum unit with
flanged gage conn.

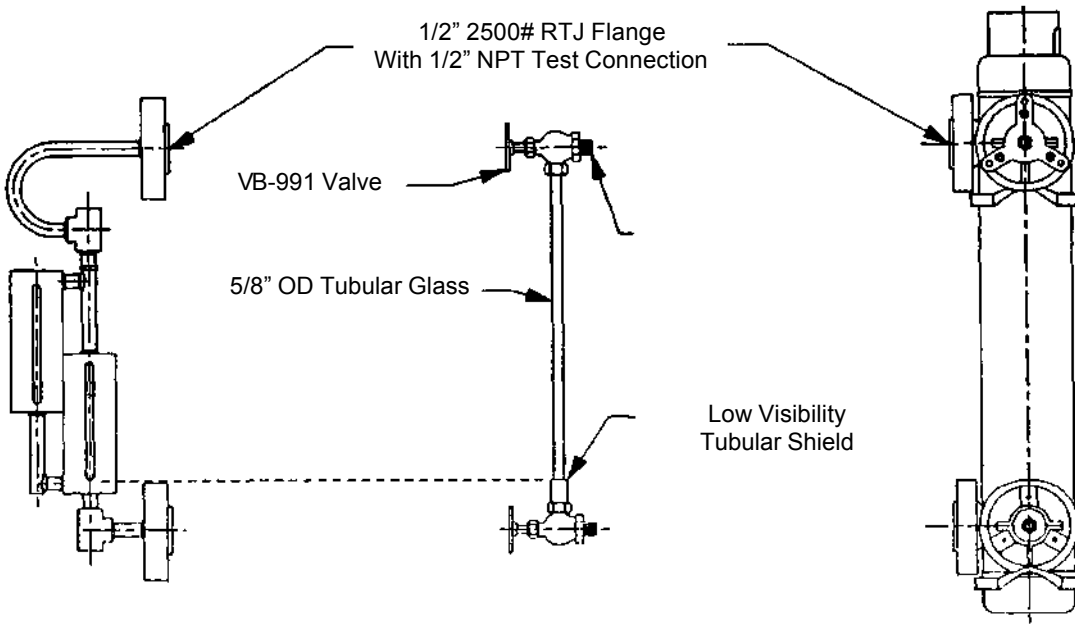

Fig. 1B
Flat glass gage with
flanged gage conn.

Fig. 2A
Bronze valves and tubular gage
glass for boil-out service

Fig. 3B
Water column with valves
having flanged gage conn.

Form E156-B

Clark•Reliance®

Recommended Blow-Down Practices For Water Columns, Electrolevs and Water Gages

It is common practice to blow-down water columns and gage glasses. However, the frequency and method of blow-down may affect service life and performance of this equipment.

Clark-Reliance suggests the following blow-down procedure:

1. Close both the steam and water valves between the boiler drum and the water column or water gage.
2. Open the drain valve fully on the bottom of the water column or water gage.
3. Crack open the steam valve and allow a gentle rush of steam to pass through the water column or water gage for no longer than 20 seconds.
4. Close the steam valve.
5. Inspect the water gage to insure that all foreign matter is flushed from the glass or mica. If the gage is not visually clean, repeat steps 3 and 4.
6. Close the blow-down valve and simultaneously open the steam and water valves, slowly bringing the equipment back to a normal operating level.

Note:

1. Any trip or alarm circuits that are actuated by the equipment being blown-down should be bypassed to prevent false alarms during the blow-down process.
2. Blow-down should be conducted on a weekly basis, or as necessary, based on water quality.

VOGT POWER INTERNATIONAL	
Released, Work May Proceed	
Hugle, Kathy	Oct-17-2011

VOGT POWER INTERNATIONAL
V17460-ICXE-513-00
06-Oct-2011

For additional information contact your local Clark•Reliance representative

Clark•Reliance®
16633 FOLTZ INDUSTRIAL PARKWAY • STRONGSVILLE, OHIO 44136 • USA
TELEPHONE: +1-440-572-1500 • FACSIMILE: +1-440-238-8828

Note: Clark Reliance shall not be liable for damages of any kind resulting in part from failure to install its products in accordance with all applicable codes and/or state and local regulations, improper application and/or maintenance

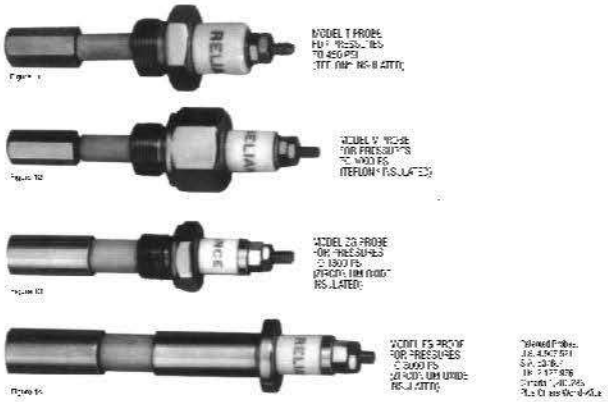

A. Maintenance

Clark-Reliance probes require very little maintenance. We suggest weekly blow downs of the water columns to prevent the build-up of contamination on the probes. A bypass switch can be installed on fuel cutout circuits. This switch will prevent a false trip during blow-down. The blow-down procedure is conducted thoroughly by closing the water valve and opening the drain valve slightly for about 20 seconds. (Refer to Clark-Reliance Form E156-B, "Recommended Blow-Down Practices for Water Columns, Electrolevs, and Water Gages)

If blowing-down of the column does not clean the probes sufficiently, use a stainless steel wire brush or fine emery cloth to clean the stainless steel rod portion of the probe. To clean the insulator, use a soft cloth and a mild detergent.

If probes are removed at any time for replacement or inspection, the sealing gasket must be replaced. Probe replacement kits are furnished with two spare gaskets. The gasket part numbers are as follows:

Probe Type	Gasket part Number
T	WCM-13
V	X175500 (Formerly E10-10)
ZG or ZB	E10-10S
FG or FB	E10-10S

Replacing the probes:

1. Before removing and replacing any probes, make sure that the column is isolated from any pressure and the drain valve is open.
2. After the column has cooled, remove probe to be inspected or replaced.
3. When replacing the probes, coat the threads lightly and uniformly with a high temperature anti-seize type lubricant such as 'Never-Seize', 'MolyCote G' or 'Fel-Pro C'
4. Torque the probes as follows:
   - Type T, V, ZG, or ZB to 40 Ft-Lb. (54 Newton-Meters)
   - Type FG or FB Probes to 90 Ft-Lb. (122 Newton-Meters)

VOGT POWER INTERNATIONAL
V17460-ICXE-514-00
06-Oct-2011

Hot torquing is suggested for all probes. However, the column *must* be isolated from service with the drain valve open *before* re-torquing the probes.The hot torquing procedure will extend probe sealing gasket life and should be performed as follows:

1. Partially open *steam* valve to warm up the column with the drain valve slightly open.
2. Close steam (and water) valves to isolate the column.
3. Open the drain valve completely.
4. Re-torque as instructed above.
5. Return to service by closing the drain valve and opening the steam and water valves.

B. Interwiring

The wires attached to the probes must be of high temperature type in order to withstand the heat. Clark-Reliance suggests the following types of wire:

Maximum Application Pressure (PSI)	Wire Specification
1000	18 Ga. Stranded conductors, Teflon insulation rated at 300 VAC and 200°C (Belden #83029, Alpha #5857, or equal)
1001 to 3000	18 Ga. Stranded conductors, Teflon treated glass braided insulation rated at 300 VAC and 400°C, Nickel coated copper conductor U.L #5182 (Radix #MGT-4502 or equal)

The high temperature wires attached to the probes can be routed to a local junction box or directly to the control unit. If a junction box is used, a low cost 18 Ga. Multi-conductor cable may be used to carry the signal to the control unit. We suggest Belden #8467 or equal.

Note: When installing the high temperature wire to the probe, use an open end wrench to prevent the Probe assembly from turning while tightening the wire terminal nut. Use a ¼" wrench for both the compression nut and the terminal nuts on T and V type probes. ZG, ZB, FG, and FB type probes require a ½" wrench for the compression nut and a 3/8" wrench for the terminal nut.

C. Troubleshooting

Troubleshooting is only necessary in the event that a control relay fails to energize or de-energize. In the event that the relay fails to *de-energize* during blow-down, the cause is a failed (short circuited) probe. The probe should be replaced.

In the event that a relay fails to *energize*, the following steps should be taken:

1. Verify probe wiring to the appropriate probes from each relay.
2. Verify water level in the column.
3. Exchange relays to verify function. If the problem moves with the relay, then replace the relay.

Any additional questions should be directed to your local Clark-Reliance Representative, or to the Factory.
Phone: (440) 572-1500 Fax: (440) 238-8828

"Always use only genuine Clark-Reliance replacement parts!"

VOGT POWER INTERNATIONAL
Released, Work May Proceed
Hugle, Kathy | Oct-17-2011

FLAT GLASS GAGES

Jerguson Flat Glass Gages are simple, rugged instruments engineered and constructed throughout to give you accurate liquid level readings for the life of the vessel - with a complete range of models for any application from pure water to highly corrosive chemicals and from cryogenic fluids to superheated steam.

Like any instrument, Jerguson flat glass gages must be installed, operated, and maintained with reasonable care and due regard for the application and environment if they are to give accurate readings over a long life.

Inspection and Delivery

Upon receiving gage, check all components carefully for damage incurred in shipping. Notify shipping firm immediately of any such damage, and request damage inspection.

Confirm that gage model number and pressure/temperature ratings (stamped on nameplate) meet application specifiacations. Also confirm that gage material is compatible with both process fluid and surrounding atmosphere in your application.

Caution: Jerguson Gage Glasses are not to be used for gaging lethal substances as defined by ASME Section VIII.

BEFORE YOU INSTALL THE GAGE
...*you should consider the following:*

- To avoid imposing piping strains on the gage chamber, connect and mount the gage so that it does not support the piping.
- Differential thermal expansions between the vessel and gage can impose severe mechanical loads on the gage — especially if the vessel contains hot or cryogenic liquids. To prevent these, install an expansion loop between gage and vessel or use a reasonably long run of piping.
- Support brackets should be considered for gages over four feet in length or over 100 pounds in weight, especially when the gage is exposed to vibration. These support brackets will prevent overloading the connecting valves and piping and prevent damage to the gage from excessive vibration.
- Always provide shutoff valves between gage and vessel. Jerguson automatic ball check valves are recommended to help provide protection against physical injury and loss of product if glass breakage should occur. Such valves also provide a means to isolate the gage for maintenance.
- Bolt torque is vital to the proper operation of a liquid level gage. Because gaskets compress over a period of time, bolt torque should be checked before the gage is installed. (Ref. to maintenance). Bolt torque should also be checked after the first few hours of operation.

CAUTION: Gages should always be isolated from the process system by closing upper and lower valves, and drain gage to relieve pressure before doing any torque or maintenance checks.

OPERATION

CAUTION: Rapid opening of connecting valves can cause glass breakage and/or possible injury to personnel. Gages should be brought into service slowly.

Always warm up the gage slowly when it is used with a vessel containing hot fluid. Crack open the shutoff valves carefully, and wait until the gage is fully warmed up before opening them all the way. Actually, Jerguson gages are fitted with tempered glass that can withstand sharp thermal transitions — cold water to 500° F — without breaking; but additional loads that you cannot measure are imposed on the glass during installation, and resistance to thermal shock is reduced correspondingly.

During system shutdown, it is best to leave the shutoff valves open, the gage then cools and depressurizes along with the system.

Keeping valves closed during shut down can trap high pressure liquid in the gage.

For high pressure and/or temperature applications a viewing system of mirrors should be used to protect personnel from possible glass breakage.

Gages should be *isolated* periodically and bolt torque checked to prevent leaks. This is especially important on gages used in intermittent operation or varying service conditions. (See TIPS FOR SPECIAL APPLICATIONS.)

When putting a gage into service always check for leaks and be certain the shut-off valves are fully open with all vents and drains closed before leaving the site.

CAUTION: While the gage Glass is in operation, the shut-off valves must be in the fully open valve position. A partially open valve will prevent automatic ball checks from seating which could result in physical injury to personnel and loss of product.

VOGT POWER INTERNATIONAL
V17460-ICXE-515-00
07-Oct-2011

MAINTENANCE

Tools for easy and correct maintenance of all flat glass gages and associated valves are contained in the special Jerguson Tool Kit (see photo). The heavy-duty olive drab twill tool case folds over and is tied compactly with tape for easy carrying or storage.

A. Inspection of Glass:

Look *at* the glass regularly for any signs of clouding or scratching. In new processes, the glasses should be inspected daily until the need for replacement becomes apparent; this will help establish the routine inspection cycle.

To examine for scratches, shine a very bright concentrated light ("Burton Lite", powerful flashlight, or automotive stop-light bulb) at about a 45° angle. Anything which glistens brightly should be looked at closely. Any scratch which glistens and catches fingernail, any star-shaped or crescent-shaped mark which glistens is cause for replacement. If inner (chemical) surface appears cloudy or roughened and will not respond to cleaning procedures, this is evidence of chemical attack and, if severe, is cause for replacement.

B. Cleaning of Glass:

Keep glasses clean using commercial glass cleaners (including Windex, Glass Wax, Bon-Ami, Lava Soap, Super Soilax, household detergents). Where regular cleaners do not seem to work, it is possible to use dilute acids such as Hydrochloric (muriatic) acid. Observe safety rules carefully when handling these dangerous chemicals. Cleaning should be done *without removing glass;* this may require recirculation of cleaning material if vessel side of glass is not accessible. Never use harsh abrasives, wire brushes, metal scrapers, or other things which could scratch the glass. **DO NOT** attempt to clean glasses while equipment is in operation.

C. Receiving and Storing Glass

Upon receiving glass inserts, inspect containers and glass inserts for shipping damage. Keep glasses in original boxes until ready to use. If ware is to be inspected, unwrap and wrap carefully, avoiding bumping or sliding polished face across any other object (including table tops).

D. Disassembly

Prior to any disassembly of the gage, first be sure that the gage is relieved of all internal pressure, and temperature is ambient. *Failure to do this may result in a sudden release of pressure and/or glass breakage.*

Loosen end bolts first, working from opposite ends toward the center.

E. Reassembly

Glass, Gaskets, and Cushions

The cutaways show the basic arrangements for Reflex and Transparent gage glasses.

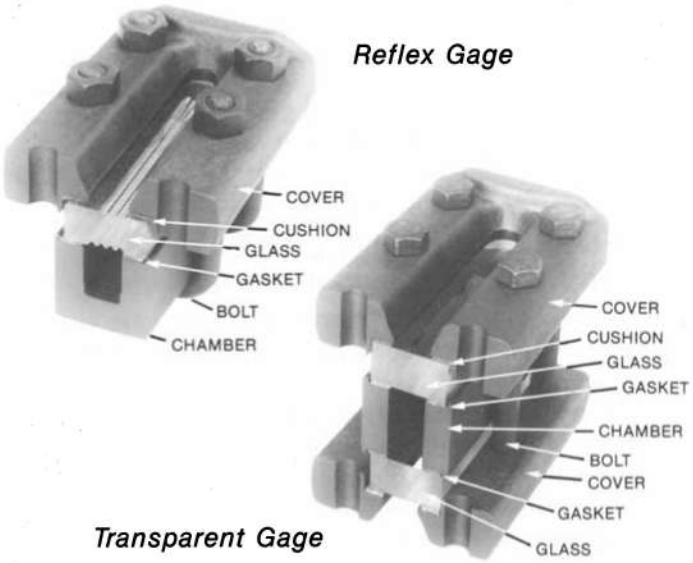

Jerguson gages use molded borosilicate glass, tempered to increase its bending resistance. This glass has a low coefficient of expansion and is more resistant to thermal shock than other glasses. Nevertheless, like any glass it is much stronger in compression than it is in tension: you should be careful not to impose any bending on the glass or set up any local stresses. The following points should be observed to ensure long life:

Check with maintenance supervisor and engineer for the proper glass to be used in equipment. Check box and glass labels or marking against the equipment pressure and temperature ratings.

The glasses, gaskets, and cushions should not be re-used, even when they appear in perfect condition. Replace them with new ones. Chipped or scratched glass should not be used, because such defects become points of high stress concentration. Even though a used glass may look perfect, it is not as reliable as a new one. Best practice is to always use a new glass.

- The glass should be seated on a flat surface with a suitable gasket on the seating surface to avoid subjecting the glass to stress concentrations which result from poor loading. It should be clamped in place with a flat cover plate that is uniformly loaded, as described in Reassembly Procedures below.
- The glass should not be in contact with any metal surfaces; in service, temperature differences at points of contact will set up high loadings and may break the glass.
- Use gaskets as follows:
  Series 51 Gages — O-ring gaskets
  Series 40 Gages — $^1/_{32}$ inch thick sheet
  All others — $^1/_{16}$ inch sheet
- For transparent gages used in steam service — protect the glass from steam erosion by inserting mica sheet between glass and gasket on the liquid side. (For special protective devices and procedures for cryogenic and corrosive chemical applications (see TIPS FOR SPECIAL APPLICATIONS).

To avoid leakage and stresses on the glass, we recommend that you use these procedures:

- Before reassembling, clean gage chamber seats thoroughly with a soft metal scraper (preferably brass), like the one furnished in the Jerguson Tool Kit. Be sure all burrs and bits of old gasket are removed. Gouged or scarred seats should be refinished in a milling machine (or you can return the chamber to the Jerguson factory for refinishing), since they cause low gasket compression and leakage.
- Locate the glass centrally in seat and cover, to avoid glass-metal contact at the ends or sides. This is best done with the gage horizontal on a bench. If it must be reassembled in a vertical position, use a small strip of gasket material (included in Tool Kit) as a spacer at each end of the glass; the sketch shows how. This will prevent contact of glass with metal during assembly and in service.

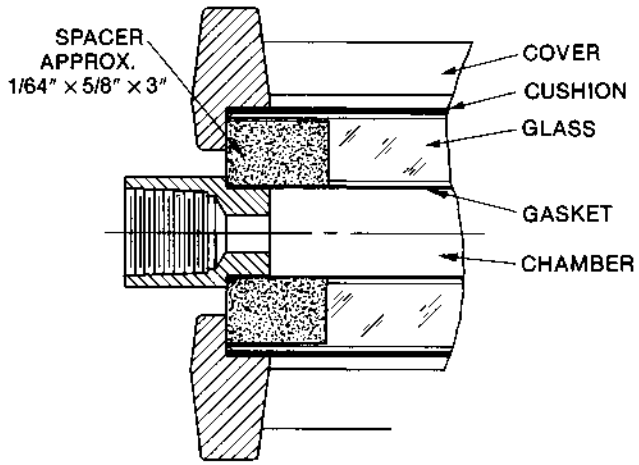

Glass End-Spacer Installation

- With a torque wrench like that in the Jerguson Tool Kit, replace the gage covers as follows:
  a. Clean bolt and nut threads and apply light oil to threads and the nut face. For gages operating at more than 150° F, use Molykote (supplied in tool kit) or a similar molybdenum disulfide lubricant.
  b. Tighten nuts finger-tight in the sequence shown in the sketch, and then tighten with torque wrench in the same sequence, in five-pound stages; this procedure produces even loading of the glass.

CAUTION: While tightening the cover, be sure the gage is isolated from the vessel. Close valves between the pressure vessel and the gage glass and open the vent or drain on the gage glass to relieve the pressure.

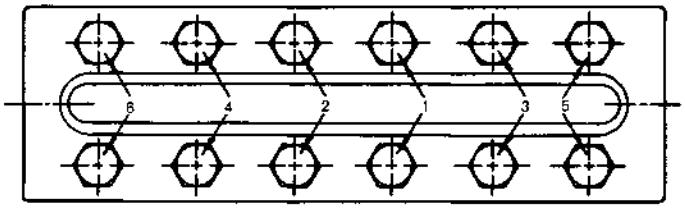

Sequence for Tightening Cover Bolts

c. Recommended final torques are:

PROCESS GAGES

Gage Series	Recommended Re-Torque Factory Assembled Gages at Initial Installation
RL & TL-10	20 Ft. Lbs. +/- 10%
R & T-300L	23 Ft. Lbs. +/- 10%
R & T-18	32 Ft. Lbs. +/- 10%
R & T-20	32 Ft. Lbs. +/- 10%
R & T-30 & R & T-32	40 Ft. Lbs. +/- 10%
R & T-40	80 Ft. Lbs. +/- 10%

Gage Series	Recommended Torque of Field Reassembled Gages
RL & TL-10	20 Ft. Lbs. +/- 10%
R & T-300L	23 Ft. Lbs. +/- 10%
R & T-18	32 Ft. Lbs. +/- 10%
R & T-20	32 Ft. Lbs. +/- 10%
R & T-30 & R & T-32	40 Ft. Lbs. +/- 10%
R & T-40	80 Ft. Lbs. +/- 10%

d. New rubber-bonded gaskets tend to become permanently compressed after a short time in service, especially if the gage operates hot; this causes slight leaks or apparent loosening of bolts. Therefore, retorque to the original value after the gage has been in hot operation for half an hour, using the same sequence as before.

e. Recommended torque values in Paragraph C are based on the use of molybdenum disulfide lubricant and the use of gaskets cut to the appropriate dimensions for the particular gage series.

f. Be sure that the replacement glass is proper for the service. Check safety devices for operation below pressure rating of the glass. Protective shields to keep cold air, water, or falling objects from glass, must be replaced.

TIPS FOR SPECIAL APPLICATIONS

Spring Washers for Temperature Extremes

To avoid retorquing cover bolts in exceptionally hot or cold applications, use Jerguson spring washers under the bolt heads or nuts to maintain gasket loading. It is best to return the gage to the factory to add spring washers, since longer bolting is required and the characteristics of the washers and their arrangement are important.

Protection from Chemical Attack

Gage glasses used with fluids corrosive to glass require the use of shields. Kel-F or Mica may be suitable to protect the glass. (Shields cannot be used with Reflex-Type glass inserts.) Mica Shields are installed between the sealing gasket and glass. Kel-F Shields are to be installed as follows:

a) Place the Kel-F shield in the gage instead of a gasket between the chamber and glass inserts.

b) Torque to the required torque level for the gage series in use.

c) Let the gage sit for 10-12 hours.

d) Retorque to original torque level as completed in Step b.

e) Steps c and d may have to be repeated to prevent leakage.

Uniformly insulate the gage, so that all parts remain at the same temperature. Otherwise, thermal gradients may cause overloads on the glass or may relax the gasket clamping load and cause leaks.

Operation

To prevent thermal shock, bring the gage into service gradually; crack the shutoff valves to prevent a cold surge of liquid into the gage, and do not open them wide until the gage has time to cool down.

Do not isolate the gage when cold; the fluid within will warm up, the internal pressure will increase, and the gage may break. Either let the gage warm up with the system after shutdown, or if it must be isolated from the vessel, vent it to atmosphere.

If you must retorque at low temperatures to stop leaks, retorque the minimum amount required for the purpose. The torque tends to increase as the gage warms up, and excessive torquing when cold may overload the glass when it is restored to ambient temperatures. The use of Jerguson stainless steel spring washers (described above) may solve this problem.

High Temperature Service (over 500°F)

To prevent damage from high stresses resulting from extreme temperature gradients within the glass, a mica shield may be installed on the outside of the glass. The shield has an insulating effect and protects the outer surfaces of the glass from the effects of rapid changes in ambient temperature or cold spray.

Low Temperature Service

Installation

A Non Frost Ext. may be installed on the Series 10L, 18, 20 and 32 gages, as shown in the sketch. Attachment is accomplished by placing the stainless steel hooks (4 per extension) around the cover bolts on the under side of the cover. In effect, the extension increases the distance from glass face to cryogenic fluid so the face remains warm enough to prevent frosting.

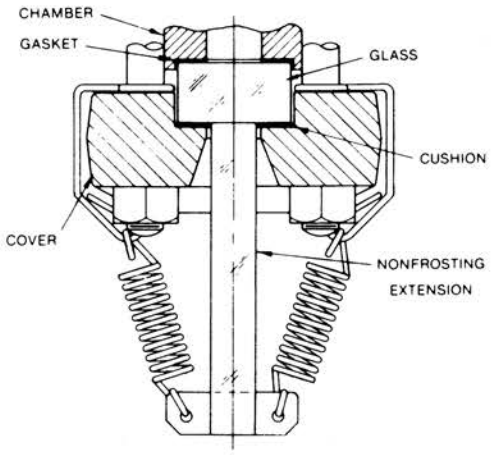

RECOMMENDED SPARE PARTS

Part	Commissioning	Two Year
Glass	5%	10%
Shields (if used)	5%	10%
Gaskets	5%	10%
Cushions	5%	10%

Replacement Parts

Jerguson Gage Glasses are constructed using the highest quality glass possible and designed for trouble-free service. JERGUSON WILL ONLY WARRANT THE USE OF JERGUSON REPLACEMENT PARTS which can be obtained from any of our authorized representatives or manufacturing and service centers listed below:

JERGUSON MANUFACTURING & SERVICE CENTER LOCATIONS

CLARK-RELIANCE CORPORATION
16633 Foltz Industrial Parkway • Strongsville, OH 44149
Telephone: (440) 572-1500 • Fax: (440) 238-8828

CLARK-RELIANCE CORPORATION
9441 West Sam Houston Parkway, Suite 100 • Houston, TX 77099
Telephone: (713) 785-4400 • Fax: (713) 785-1826

Notice to Plant Operators

The use of non-Original Equipment Manufacturer parts (such as glass, gaskets, probes, modules, etc.) will void the Agency Approval (FM, UL, CSA, CRN, ABS, etc.), pressure/temperature rating, and warranty of this equipment. Clark-Reliance requires the use of OEM parts for all repairs on this product in order to maintain plant and personnel safety, and reliable operation.

"PARTS-PLUS"

Critical spare parts for overnight delivery, direct from the manufacturer.

clark-reliance.com/parts

Jerguson Repair Kits

JRK - _ _ _

S = Garlock IFG-5500 (Standard) Seal & Cushion Gaskets
T = Teflon Seal Gasket; IFG-5500 Cushion Gasket
G = Grafoil Seal Gasket; IFG-5500 Cushion Gasket
AG = Grafoil Seal & Cushion Gaskets

Gage Size, 1 thru 9 (Applicable with codes 0-4 only)
Gage Size, 11, 12, 13, 15, 18, 20 (Applicable with codes 5 & 6 only)

0 = Reflex Borosilicate Glass
1 = Transparent Borosilicate Glass
2 = High Pressure Transparent Borosilicate Glass
3 = Transparent Borosilicate Glass with Mica Shields, Standard Quality
4 = High Pressure Transparent Borosilicate Glass with Mica Shields, Standard Quality
5 = Reflex Borosilicate Glass
6 = Transparent Borosilicate Glass

16633 Foltz Parkway Strongsville, OH 44149 USA
Phone (440) 572-1500 Fax (440) 238-8828
sales@clark-reliance.com www.clark-reliance.com

JERGUSON®
A Division Of The Clark-Reliance Corporation

Specialists In Liquid Level Indication

Installation, Operating and Maintenance Instructions

Section: J500
Bulletin: J500.07
Date: 10/1/96
Supercedes: F-7

140, 60 & 90 Series Valves

Jerguson gage valves are simple, rugged instruments engineered and constructed throughout to give you accurate liquid level reading for the life of the vessel. With a complete range of models for any application, from pure water to highly corrosive chemical.

Like any instrument, Jerguson gage valves must be installed, operated and maintained with reasonable care and due regard for the application and environment.

INSPECTION AND DELIVERY

Upon receiving valves, check all components carefully for damage incurred in shipping. Confirm that valve model number and pressure temperature ratings (on nameplate) meet application specifications. Also confirm that the material is compatible with both process fluid and surrounding atmosphere for your application.

CAUTION: Jerguson gage valves are not to be used for gaging lethal substances as defined by ASME Section VIII.

BEFORE YOU INSTALL THE GAGE VALVES

- To avoid imposing piping strains on the valves, connect and mount the valves so that they do not support the piping.
- Support brackets should be considered, if level gage is over four feet in length or over 100 pounds in weight, especially when exposed to vibration. Support brackets will prevent overloading the valves.
- When installing liquid level gages, always provide shut off valves between gage and vessel. Jerguson automatic ball check valves are recommended to help provide protection against physical injury and loss of product if glass breakage should occur.

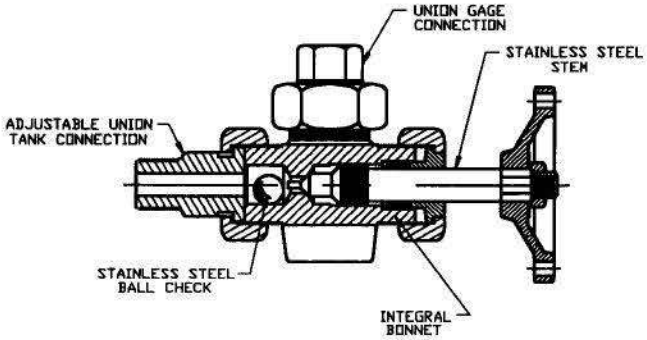

NO. 147

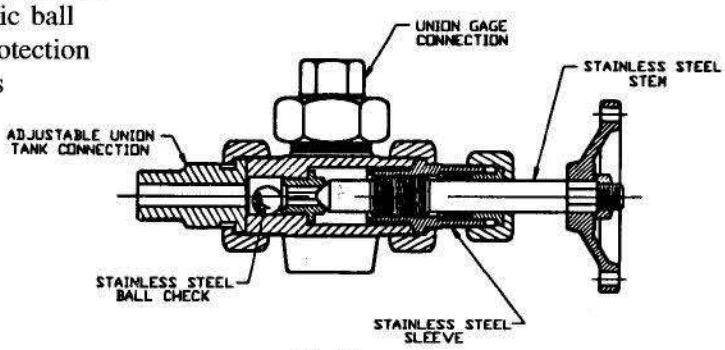

NO. 67

VOGT POWER INTERNATIONAL	
Released, Work May Proceed	
Hugle, Kathy	Oct-17-2011

VOGT POWER INTERNATIONAL
V17460-ICXE-516-00
07-Oct-2011

OPERATION

CAUTION: Rapid opening of valves can cause glass breakage and/or possible injury to personnel.

For protection during shipments, packing gland is loosened and stem is in the open position. Adjust stem and packing after installation. Do not tighten packing more than enough to stop leakage.

Crack open the valves carefully, and wait until equipment is fully warmed up and/or pressure is equalized before opening valves all the way.

CAUTION: While the valves are in operation, they must be in their fully open position. A partially open valve will prevent automatic ball checks from seating which could result in physical injury to personnel and loss of product.

MAINTENANCE

CAUTION: Prior to any disassembly of valves, first be sure that the valves are relieved of all internal pressure, and temperature is ambient, and has been drained and/or purged of any fluids. Failure to do this may result in a sudden release of pressure and/or physical injury to personnel.

CAUTION: When gage fails causing ball checks to seat, closing the valve will allow fluid to flow from vessel during that period when pin pushes ball off its seat and before stem has contacted seat, the operator could be hurt if not realizing what is happening or fires could result if hazardous liquids are involved.

TO REPLACE STEM PACKING 140, 60 & 90 Series Valves

Close valves and drain fluid. Disengage packing gland nut and pull packing gland out of stuffing box. Remove old packing and insert new packing. Put the packing gland and packing gland nut into position and tighten the nut. The gland nut should be tightened enough to stop leakage around the stem without causing excessive binding of stem during operation.

TO REPLACE VALVE SEAT 60 & 90 Series Valves

Close valves and drain fluid, disengage sleeve nut from valve body and remove stem, sleeve, sleeve nut, gland, gland nut as a unit from the valve. Using a standard 5/8″ socket wrench remove seat. Before replacing seat apply lubricant (Molykote "G" or equivalent) to the threads to prevent seizure of metals. The seat is then replaced and tightened well to prevent leakage. Replace the stem unit in the valve body and tighten the sleeve nut.

WARNING: During system shut down, it is best to leave shut off valves open, the equipment then cools and depressurizes along with the system. Keeping valves closed during shut down can trap high pressure liquid in the valves.

Clark•Reliance®
Instrumentation and Controls Group

World's Leader in Boiler Trim Instrumentation & Controls

Section: R500.E153C
Bulletin: E153-C
Date: 5-10-09
Supersedes: E153-A-1

Prismatic and Flat Glass Water Gage Maintenance Instructions

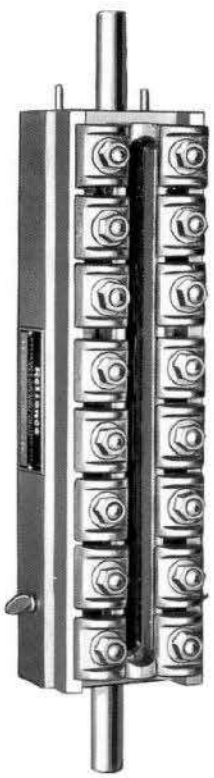

Flat Glass Gage Glass

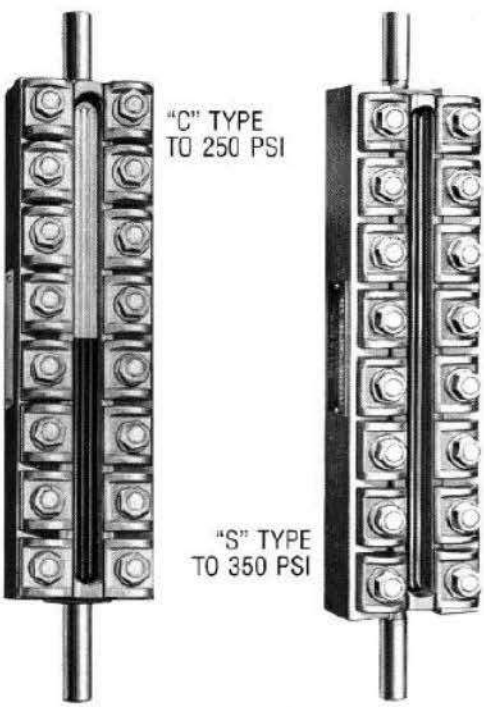

Prismatic Gage Glass

VOGT POWER INTERNATIONAL	
Released, Work May Proceed	
Hugle, Kathy	Oct-17-2011

Clark•Reliance®
Instrumentation and Controls Group
16633 Foltz Parkway, Strongsville, OH 44149 USA
Telephone: (440) 572-1500 Fax: (440) 238-8828
www.clark-reliance.com

VOGT POWER INTERNATIONAL
V17460-ICXE-517-00
06-Oct-2011

Unpacking and inspection

Upon receipt of the Boiler Drum Level instruments, examine the contents of the container(s) for damage. Report any faulty conditions as soon as possible to your carrier to avoid acceptance of damaged goods. Clark-Reliance will not be responsible for goods damaged in shipping or storage, or subsequent loss or damage due to improper storage or exposure as a result of damage to shipping containers. Submit a digital photo of any damaged equipment and container to Clark-Reliance, if possible

Verify that all materials are present as recorded on the Packing List provided with each shipment. Report any discrepancies to Clark-Reliance immediately. Have the Clark-Reliance order number and shipping waybill available at the time of your call.

Handling

Your Clark-Reliance shipment has been carefully packed. However, the shipment may include spare parts, temporary water gages for "Boil-out" purposes, maintenance instructions, and engineering drawings.
Upon receipt of the order, the equipment and above items should be identified and verified against the packing list. Any documentation that has been provided should be directed to the appropriate personnel.
Care should be exercised as the items are uncrated. The shipment may contain fragile glass components. If any equipment appears to have been damaged from shipment, please contact your local Clark-Reliance representative or the factory immediately.

Storage

Clark-Reliance Boiler Trim products should be stored in a dry and sheltered area prior to installation. The equipment provided may consist of electrical items that are intended for either indoor or outdoor use. As a matter of good practice, dry storage will eliminate the potential for water damage.
The temperature of the storage area should not exceed 150 degrees F. (65.5 degrees C) or drop below 32 degrees F (0 degrees C).

Boil-out Gage Practice and Policy

On new boiler installations, it is common procedure to initially operate the boiler at a reduced pressure for a short time to 'cook out' foreign materials (pipe joint compound, grease, oil, flux, etc.) that remain in the drum or other pressurized parts of the system after the boiler has been constructed. During this boil-out period, most of the suspended or dissolved debris is flushed out with blow-down discharges. However, a small amount of residue is unavoidably deposited as a film on all internal wetted surfaces… including those of the water gage glass. This type of scum layer is nearly impossible to remove by blowing down the gage glass, particularly if the gage glasses are protected by mica shields, as they must be, in high pressure installations.

As a practical matter, it is more expedient to employ an inexpensive temporary level gage, which can be discarded or returned after the boil-out procedure, rather than to use then rebuild the gage glass intended for regular service. For boil-out purposes on new water columns, Clark-Reliance provides a temporary level gage at no charge, or at a refundable charge, under one of the following conditions:

1) When a Prismatic, Flat Glass, or Simpliport gage having ¾" O.D. end nipples is supplied as part of a water column, and the boil-out pressure will not exceed 200 PSIG, Clark-Reliance automatically will furnish for temporary boil-out service the following parts at no charge:

1 pc. – ¾" O.D. tubular glass gage cut to the proper length

2 pcs. – Rubber packing rings (*)

1 pc. – Low visibility shield (so that low vision in the tubular glass gage is the same as in the gage glass that will be used for regular service).

At the conclusion of the boil-out procedure, all of the above parts should be discarded. When the gage having stainless steel nipples is installed, it is essential that the appropriate (non-rubber) packing rings are used, to assure durable sealing of the stainless steel nipples.

2) When a gage glass having flanged connections is supplied as part of a water column, and the boil-out pressure will not exceed 200 PSIG, Clark-Reliance will furnish the following parts at no charge:

1 set – VB991 gage valves with ½" MNPT connections

1 pc. 5/8" O.D. tubular glass gage cut to the proper length

1 pc. – Low visibility shield.

The boil-out gage valves should be temporarily installed in the ½" FNPT "Test" connections in the flanges of the regular water gage shut-off valves, which are on the water column. This equipment may be discarded after the boil-out has been completed.

3) On installations like the above, but where the boil-out pressure will exceed 200 PSIG, consult Clark-Reliance to discuss options for an appropriate temporary use gage and valves. The cost of this assembly will be listed separately on our order invoice. However, full credit will be issued upon its return to Clark-Reliance.

* Bronze valves are supplied with rubber packing rings. These are to be used for the boil-out procedure. Steel valves are supplied with packing cartridges and separate rubber packing rings (to be used for boil-out).

Recommended Blow-Down Procedure for Water Columns and Gage Glasses

The importance of proper cleaning and maintenance of the water column and the water gage glass, or sight glass, cannot be stressed enough. The water column must he kept clean to ensure the water level in the gage glass accurately represents the water level in the boiler. Note that the frequency and method of blow-down may affect service life and performance of the water column and gage glass.

The water gage glass on a boiler enables the operator to visually observe and verify the actual water level in the boiler. However, if not properly cleaned and maintained, a gage glass can seem to show that there is sufficient water, when the boiler is actually operating in a low or low water condition. A stain or coating can develop on the inside of the glass where it is in contact with boiling water. After a time, this stain gives the appearance of water in the boiler, especially when the glass is completely full or empty of water.

Also, the connection lines to the gage glass can become clogged with sediment and show normal water levels when water may be low. After performing the blow-down procedure, if the water level does not return to normal promptly, the connecting piping may be partially clogged and have to be cleaned.

Clark-Reliance suggests the following blow-down procedure:

1. Close both the steam and water valves between the boiler drum and the water column or water gage.

2. Open the drain valve fully on the bottom of the water column or water gage.

3. Crack open the steam valve and allow a gentle rush of steam to pass through the water column or water gage. The steam should not pass through for longer than 20 seconds.

4. Close the steam valve.

5. Inspect the water gage to insure that all foreign matter is flushed from the glass or mica. If the gage is not visually clean, repeat steps 3 and 4.

6. Close the blow-down valve and simultaneously open the steam and water valves, slowly bringing the equipment back to a normal operating level.

7. Water should enter the gage glass quickly when the blow-down valve is closed. This will indicate that the lines are free of sludge, sediment, or scale buildup.

Note:

1. Any trip or alarm circuits that are actuated by the equipment being blown-down should be bypassed to prevent false alarms during the blow-down process.

2. Blow-down should be conducted on a weekly basis, or as necessary, based on water quality.

3. Always notify control room personnel prior to conducting a Blow-Down to prevent any false alarms or false trips.

Recommended Maintenance and Annual Inspections

Regarding any recommended maintenance procedures or annual inspections, we suggest any device containing probes should be inspected on an annual basis for contaminated probes and wire secure terminations.

Caution: Before proceeding, follow any and all plant lock out - tag out procedures required. Verify that all power is turned off to the probes. If under pressure, the equipment should be isolated, or the boiler should be shut down *before* proceeding with the installation. Open drain valve to eliminate any trapped pressure. All inspection and installation steps should be performed by a qualified technician and should be executed in accordance with all applicable national and local codes.

With no pressure or elevated temperature, beyond ambient conditions, at least one probe should be removed for inspection. Ideally, for devices containing multiple probes, we suggest removing one probe from an upper indication location (normally in steam area) and one probe from a lower indication location (normally in water area) for inspection. If any probes display signs of contamination, they can be cleaned with a mild detergent and re-installed using a new sealing gasket, if applicable. Refer to the attached IOM # E189-A for additional details. If a probe exhibits and contamination across the length of the insulator, which cannot be easily cleaned, the probe should be replaced.

Prismatic and Flat Glass Gages

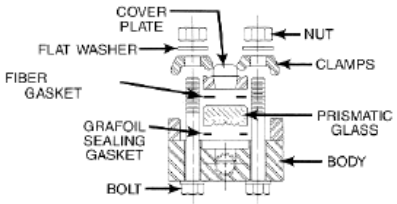

PRISMATIC TYPE
("C" or "S" Model)
Note: 1) Prism side of glass must face inside of gage, as shown

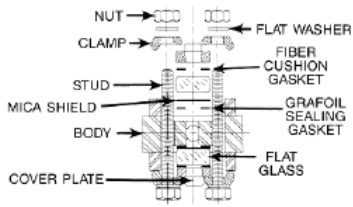

FLAT GLASS TYPE
(FG400, FG900, FG1500, or FG2000 Model)
Note: 1) Mica shields are typically furnished in two pieces. Insert the thicker of the two pieces first.

BEFORE YOU INSTALL THE GAGE GLASS:

- Support brackets should be considered for gages over four feet long and weighing in excess of 100 pounds. The support brackets will help prevent overloading of the connecting valves and piping. The brackets will also help prevent damage caused by excessive vibration.

- While the advantage of using automatic ball check valves ahead of a level gage is evident, the principal disadvantage is the check valves will prevent effective blow-down of the gage itself. When the level gage drain valve is opened, pressure inside the level gage drops, and the check valve balls are driven into the almost closed positions by system pressure.

- Confirm that the gage glass model number and the pressure rating, which can be found on the nameplate, meet the required specifications and design conditions for the application.

Maintenance

Water Gage Removal Procedure

This procedure applies to all Clark-Reliance water level gages with nipple end connections. Nipple end connected water gages are designed in various models to service pressure up to 1500 PSIG (103.4 BarG) saturated steam applications.

Water gages designed for use with bronze water gage valves have an overall length of 2 ¾" (70mm) less than the design of the water gage valve centers. Water gages designed for use with steel water gage valves have an overall length of 3 ¼" (82.5mm) less than the design of the water gage valve centers.

1) Isolate the water gage valves and open the drain valve.
2) Remove the packing yoke bolts on steel valves. On bronze valves loosen the nipple packing nut.
3) Grasp the water gage firmly and push up into the upper (steam) valve. This action will disengage the water gage from the lower (water) valve.
4) Carefully swing the water gage off to one side and drop it out from the steam valve.

Disassembly:
-After pressure is relieved from the gage glass, remove from the boiler drum and lay flat on a workbench
-Loosen end bolting first, working from the opposite ends toward the center of the gage.
-Remove all components including washers, finger clamps, cover plates, gaskets, glass, and Mica shields. Retain the bolting and cover plates. Discard all gaskets, glass, and Mica. Note: ***Never*** re-use these components, even when they appear to be in perfect condition!

Reassembly:
-Inspect all glass kit components. Verify that the repair kit is the correct one for the model gage that is being repaired. Carefully inspect the glass for any chips, cracks or scratches. Do not use the glass if it is damaged! Inspect the Mica shields and gaskets for any visible signs of damage, Do not use these components if damaged!
-Use a bronze or brass scraper to remove any bits of gasket material that may remain, without causing damage to the gage body or cover plate(s).
-Examine body gasket surfaces for steam cuts or scratches. Gouged or scratched gasket surfaces may be re-machined if necessary. See Clark-Reliance Form E190-A for machining details and tolerances.
-Locate the gaskets, Mica (if on Flat Glass Gages), and glass centrally in the seat and cover to avoid any glass-metal contact at the ends or sides.
-Clean and lubricate all fasteners with Molycote or similar high temperature anti-seize lubricant.
-Tighten nuts 'finger tight' in the sequence shown in the sketch. Using a calibrated torque wrench, tighten all nuts in the proper sequence in 1/3rd increments.

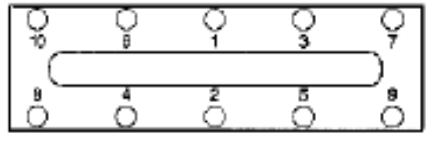

-Torque values

'C' and 'S' Prismatic	40 Ft. Lbs. (54 Newton Meters)
FG400 or FG900 Series	45 Ft. Lbs. (61 Newton Meters)
FG1500 or FG2000 Series	70 Ft. Lbs. (95 Newton Meters)

-Hot torque gage per instructions found on page 8 of this manual.
-Return gage to service
-**Note**: Conduct regular inspection of the gage glass. The gage must be repaired if there are any signs of scratches, etching, erosion of the glass, clouding, or deterioration of the glass or Mica shields.

Recommendations and Instructions for Hot Torquing Gage Glasses and Probe Type Devices

When a new piece of equipment, whether a Gage Glass or a Probe* type device is installed, the hot torque procedure must be performed. This ensures that all bolting and components are properly seated for optimum performance. This procedure must also be performed after any maintenance is done to the equipment. Note that only the affected components, such as the installation of a new probe or glass kit, need to be hot torqued.

All work must be done by a qualified technician. All plant rules and procedures must be followed, including any lock out / tag out requirements. Verify that all alarms and trips have been by-passed on probe columns before any maintenance is performed, to prevent any false alarms or wiring hazards.

The hot torque procedure should be performed as follows:

1) Isolate the gage glass or probe device from any pressure.
2) Fully open the drain valve to evacuate any built up pressures and to allow the contained steam and water to escape during equipment warm up.
3) Slowly open the *steam valve* to allow a gentle rush of steam to flow through the equipment. This should take approximately 5 – 10 minutes. The observer should see the High Temperature lubricant "sizzling" and smoke emanating from the gage of column. This is an indication that the equipment has reached the operating temperature.
4) When the equipment has been properly heated, close the steam valve. The drain valve should remain open to allow any residual steam or pressure to escape.
5) Immediately re-torque the equipment to the correct values stated in the applicable instruction manual. There should be movement of approximately 1/8th of a turn or more.
6) If there is no movement of the bolting or probes, the equipment was not heated properly. Repeat the procedure.
7) Once the hot torque procedure is completed, close the drain valve, and the equipment can be put back into service. Carefully check for any leaks in the equipment and verify proper operation of all illumination, relay controls and wiring, or other accessories.

Installation Instructions for Model GL-53 Water Gage Illuminators for Tubular Glass Gages or Prismatic Gages

1. General Information

Model GL-53 Water Gage Illuminators are designed to improve the vision of the water level, for plant personnel. If a tubular glass or prismatic type water gage is installed in an area with adequate lighting, a gage illuminator may not be required. However, if the water gage is to be viewed from a distance greater than 25 feet, or in poorly lit areas, then a gage illuminator is recommended.

2. Installation

Model GL-53 illuminators are designed with a ½" female NPT electrical conduit connection. These illuminators should be installed vertically with the conduit connection located at the bottom. A flexible power cord can be temporarily installed on the unit, and used to test the unit. This will enable the installer to optimize the illuminator location, with respect to the gage. **CAUTION: when testing the position of the unit, the housing will become very hot when powered.** Then, a permanent power connection can be installed. Normally, the illuminator will be installed parallel to the gage and off to the left or right side, to prevent obstructing the operator's view of the water gage.

If the illuminator is to be installed with a prismatic type water gage, one illuminator can be used for up to two sections of size 9 glass or approximately 27 inches of water gage viewing.

This illuminator can be installed outdoors.

3. Maintenance

There is no maintenance required, other than the occasional need to service the lamp. For additional instructions, see form E178-A. As an option to extend lamp life, we suggest an illuminator timer: model TPS-120 (for 120 VAC supply) or TPS-240 (for 240 supply). An illuminator timer provides up to 3 minutes of operation time, by depressing a pushbutton. This results in extended lamp life, reduced power consumption and maintenance. Consult C-R or your local representative for additional details.

Wiring instructions for the Clark · Reliance GL53 Illuminators (for 'C' and 'S' Series Gages).

Note: Make sure that the power is turned off to the supply wiring before connecting the illuminator.

Tools needed:
– Slotted Screwdriver
– 1/2" Wrench

1. Open the illuminator housing by loosening the three hex head cap screws on the end of the unit that secures the Conduit/Lamp assembly in place.

2. Carefully remove the assembly and remove the 60W Frosted Lamp (B) from the illuminator housing and set aside.

3. Loosen the screw (C) from the side of the lamp socket/conduit connector that holds the assembly in place on the pipe nipple.

4. Take the lamp socket/conduit connector assembly (D) off of the housing end piece and set the housing aside.

5. Disassemble the lamp socket/conduit connection assembly by removing the two screws (E) from *inside* of the lamp socket. (Note that there are two small washers on the assembly screws. Do not lose these washers as they are needed for re-assembling the illuminator.)

7. Connect the *black* wire to the 'gold' screw terminal on the bottom of the lamp socket.

8. Connect the *white* wire to the 'silver' screw terminal on the bottom of the lamp socket.

9. Re-assemble the lamp socket/conduit connector assembly using the same two screws with washers inside of the lamp socket. Make sure that the mounting plate is centered on the lamp socket/conduit connector assembly.

10. Thread the lamp socket/conduit connector assembly back into the bottom of the pipe nipple and tighten the holding screw.

11. Carefully screw the lamp into the socket and re-assemble the bottom assembly back onto the illuminator housing (make sure that the gasket between the bottom assembly and housing is in place). Secure by tightening the three hex head cap screws on the bottom side of the housing.

12. Wire the illuminator to the 120 V.* power supply. (*Unless lamp is for 230 V. service) Note that a proper ground wire is recommended.

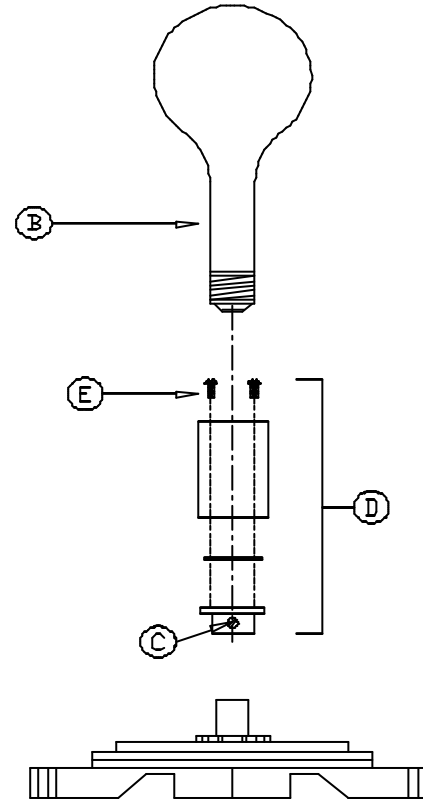

GL53 Illuminator - 120V.
Specification: 60W/120V
Current Draw: .5 Amps

Wiring instructions for the Standard and Vertical Clark · Reliance Flat Glass Gage Illuminators

Note: Make sure that the power is turned off to the supply wiring before connecting the illuminator.

Tools needed:
– Slotted Screwdriver

1. Open the illuminator housing by loosening the thumb screw (A) in the side of the unit that secures the door assembly in place.

2. Carefully open the door and remove the 150W clear lamp (B) from the inside of the illuminator housing and set aside.

3. Remove the two brass screws (C) from the bottom of the illuminator which hold the lamp socket/conduit connector assembly in place.

4. Take the lamp socket/conduit connector assembly (D) from the illuminator housing and set the housing aside.

5. Disassemble the lamp socket/conduit connection assembly by removing the two screws (E) from *inside* of the lamp socket. (Note that there are two small washers on the assembly screws. Do not lose these washers as they are needed for re-assembling the illuminator.)

6. Slide the conduit connector and mounting plate over the power supply wires for re-assembly.

7. Connect the *black* wire to the 'gold' screw terminal on the bottom of the lamp socket.

8. Connect the *white* wire to the 'silver' screw terminal on the bottom of the lamp socket.

9. Re-assemble the lamp socket/conduit connector assembly using the same two screws with washers inside of the lamp socket. Make sure that the mounting plate is centered on the lamp socket/conduit connector assembly.

10. Place the lamp socket/conduit connector assembly back into the bottom of the illuminator housing and fasten with the two brass screws.

11. Carefully screw the lamp into the socket and close the illuminator door. Secure by tightening the thumb screw on the side of the housing.

12. Wire the illuminator to the 120 V.* power supply. (*Unless lamp is for 230 V. service) Note that a proper ground wire is recommended.

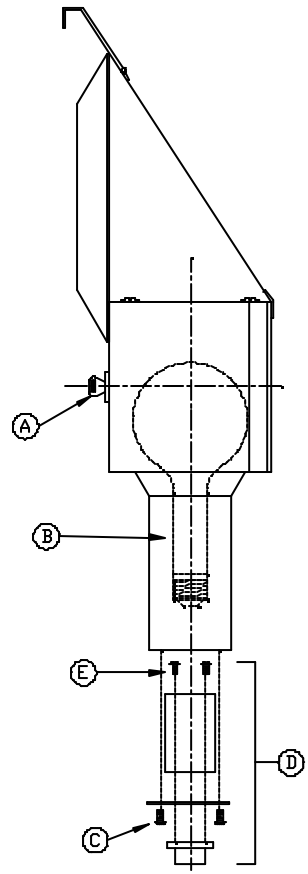

FG*0 Standard Illuminator - 120V.
Specification: 150W/120V
Current Draw: 1.25 Amps

Reliance DuraStar
INSTALLATION, OPERATING & MAINTENANCE INSTRUCTIONS

STORAGE and HANDLING

The Reliance DuraStar LED Illuminator meets or exceeds all applicable specifications when shipped from the factory.

All units should be inspected upon receipt to ensure that no damage has been incurred during transit. If there has been, a claim should be filed with the carrier immediately. The unit should be stored in an area protected from the elements and corrosive fumes, in a secure manner where they can neither fall, nor be struck by other objects. Care should be taken to protect the window and the end connections from damage. Avoid placing any objects on the illuminator at any time.

COMPONENTS

There are three main components that make up the DuraStar Illuminator: the light strip with louvers, the power supply, and the cable connecting these two main pieces. The cable may have more than one piece depending on the required distance between the illuminator and the power supply. *Note that an illuminator hood is not required or recommended.*

INSTALLATION

Caution: All lights are tagged with the service conditions for that particular unit. These specifications are located on the Reliance tag on the power supply housing, and are contained in the "Specifications" section of this manual. Do not use or refer to specifications listed on the red label on the power supply housing. They are specifications for generic use. Review the ratings prior to installation and again prior to start-up, to ensure proper operation in the installed environment. Should there be any doubt as to the applicability of a unit for the installed environment, consult the factory before placing the unit into service.

Note: All installation steps should be performed by a qualified technician and should be executed in accordance with all applicable national and local codes.

The light and power supply should be checked to ensure that they contain no foreign matter, and that the end connections are clean, undamaged, and in line with existing conduit.

Step by step instructions:

1) The upper bracket on the illuminator has two holes that fit onto the hood pins that are installed on the top of the gage glass body. There are two different upper brackets: one for the FG400 and FG900 series gages and another for the FG1500 and FG2000 series gages. Verify that the assembly you received fits the existing gage glass. Slip the upper illuminator bracket onto the hood pins. (See Figure 1)
2) Let the lower bracket rest on the gage glass between the cover plate. Adjust the lower bracket by loosening the set screw and align the bracket at the lowest point on the glass between the cover plate opening. Tighten the set screw to secure the lower bracket.

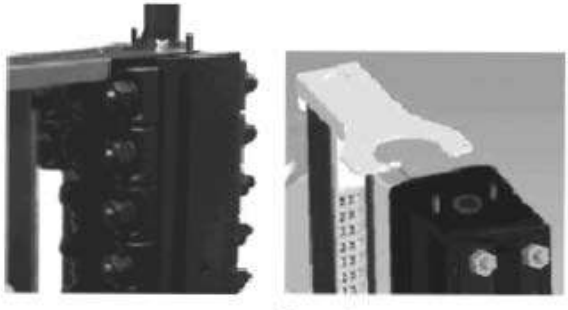

Figure 1

Figure 1 : Wiring Instructions

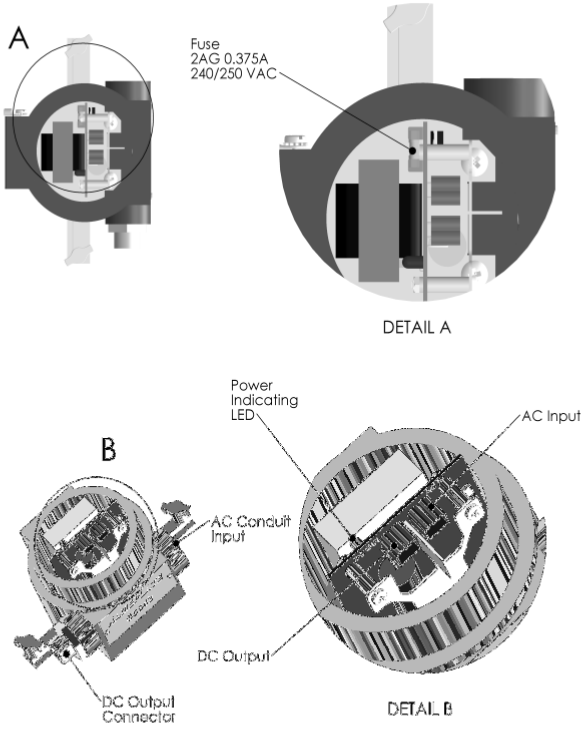

Caution:
Incorrectly wiring the AC input to the DC output will cause permanent damage to the power supply and could result in ignition of hazardous atmosphere

Confirm that the correct supply voltage is being applied to the illuminator power supply. The unit has been manufactured for a specific power source, either 120 or 240 VAC.

SPECIFICATIONS

Power Supply: 120 or 240 VAC @ 50-60 Hz
Power Consumption:< 750 mA @ 120 VAC
< 375 mA @ 240 VAC

Est. Life: 100,000 Hours (continuous)

Agency Approvals: FM and CSA
Class I, Div. I Grps. B, C, & D
Class II, Div I, Grps. E, F, & G
Intrinsically Safe Associated Apparatus

Wire Size: Min 18 AWG / Max 12 AWG
Max dist. from power supply to light: 8 feet (2.5M)

Ambient Temperature: -40 F (-40 C) to 170 F (77 C)
Electrical Connection: ¾" FNPT

RECOMMENDED SPARE PARTS

PRISMATIC GAGE GLASS			
Size/Type	Part No.	Description	Quantity
C4 or S4	RK-35	Repair Kit (incl. Glass & Gaskets)	1 per section
C5 or S5	RK-35A	Repair Kit (incl. Glass & Gaskets)	1 per section
C6 or S6	RK-35B	Repair Kit (incl. Glass & Gaskets)	1 per section
C7 or S7	RK-35C	Repair Kit (incl. Glass & Gaskets)	1 per section
C8 or S8	RK-35D	Repair Kit (incl. Glass & Gaskets)	1 per section
C9 or S9	RK-35E	Repair Kit (incl. Glass & Gaskets)	1 per section

FG400 / FG900 SERIES FLAT GAGE GLASS			
Size/Type	Part No.	Description	Quantity (Set)
FG404/FG904	RK-4E-SET	Repair Kit Set (incl. Glass, Mica & Gaskets)	1 per section
FG405/FG905	RK-4F-SET	Repair Kit Set (incl. Glass, Mica & Gaskets)	1 per section
FG406/FG906	RK-4A-SET	Repair Kit Set (incl. Glass, Mica & Gaskets)	1 per section
FG407/FG907	RK-4B-SET	Repair Kit Set (incl. Glass, Mica & Gaskets)	1 per section
FG408/FG908	RK-4C-SET	Repair Kit Set (incl. Glass, Mica & Gaskets)	1 per section
FG409/FG909	RK-4D-SET	Repair Kit Set (incl. Glass, Mica & Gaskets)	1 per section

FG1500 SERIES FLAT GAGE GLASS			
Size/Type	Part No.	Description	Quantity (Set)
FG1504	RK-5F-SET	Repair Kit Set (incl. Glass, Mica & Gaskets)	1 per section
FG1505	RK-5A-SET	Repair Kit Set (incl. Glass, Mica & Gaskets)	1 per section
FG1506	RK-5B-SET	Repair Kit Set (incl. Glass, Mica & Gaskets)	1 per section
FG1507	RK-5C-SET	Repair Kit Set (incl. Glass, Mica & Gaskets)	1 per section
FG1508	RK-5D-SET	Repair Kit Set (incl. Glass, Mica & Gaskets)	1 per section
FG1509	RK-5E-SET	Repair Kit Set (incl. Glass, Mica & Gaskets)	1 per section

FG2000 SERIES FLAT GAGE GLASS			
Size/Type	Part No.	Description	Quantity (Set)
FG2004	RK-38-SET	Repair Kit Set (incl. Glass, Mica & Gaskets)	1 per section
FG2005	RK-39-SET	Repair Kit Set (incl. Glass, Mica & Gaskets)	1 per section
FG2006	RK-40-SET	Repair Kit Set (incl. Glass, Mica & Gaskets)	1 per section
FG2007	RK-41-SET	Repair Kit Set (incl. Glass, Mica & Gaskets)	1 per section

*** REPLACEMENT PARTS WARNING ***

The use of non-Original Equipment Manufacturer parts (such as glass, gaskets, probes, modules, etc.) will void the Agency Approval (FM, UL, CSA, CRN, ABS, etc.), pressure/temperature rating, and warranty of this equipment. Clark-Reliance requires the use of OEM parts for all repairs on this product in order to maintain plant and personnel safety, and reliable operation.

Clark·Reliance
Instrumentation and Controls Group

World's Leader in Boiler Trim Instrumentation

Simpliport 4000

INSTALLATION, OPERATION & MAINTENANCE INSTRUCTIONS

Section: R500
Bulletin: R500.E241 A
Date: 10/09
Supersedes: 12/07
CDC 07-323

Boil-Out Procedures (Form E-146A) Must be Completed Prior to Start-Up

To Place SIMPLIPORT® 4000/4100 in Service:

NOTE: Bench torque all new Simpliport Gages before installing on to the boiler!

1. Shut off water and steam gage valves.

2. Make proper connection of SIMPLIPORT 4000/4100 end nipples or flanges to the water gage valves.

NOTE 1: Where end nipples are furnished, be sure that the red lug is at the top and that all SIMPLIPORT 4000/4100 window packing nuts point slightly to the **left** as observed by viewer, See Fig. 3

NOTE 2: Where expansion loops and flanges are furnished, the SIMPLIPORT 4000/4100 is installed with the loop on the top side.

3. With Cold Boiler:

a) Open water and steam gage valves and allow SIMPLIPORT 4000/4100 to heat up along with boiler.

b) Check each port window for leakage. A small mirror held opposite the leak-detector hole (drilled through one face of each window nut) is useful here. If leakage is observed, shut off water and steam gage valves and replace module of affected port, as described on reverse side under "Installing SIMPLIPORT 4000 Replacement Modules."

NOTE: If a mirror is used to detect leaks, a small wisp of steam may be seen on the surface of the mirror when held directly opposite of the leak detection hole. This is typical and should not be considered as a failure.

c) Mounting the illuminator:
Traditional Illuminator models (PI or PIW Series): Mount illuminator and hood on side lugs of SIMPLIPORT 4000/4100, joining red slot in illuminator with red lug on SIMPLIPORT 4000/4100 (see Fig. 3).

LED Illuminator models (SI*-LED Series): Remove the four (4) Hex head screws from the gage, and install the four (4) socket-head cap screws (provided with the LED Illuminator), in order to install the LED Illuminator Mounting Bars (see Fig. 4). (Ref: IOM#R5400)

4. With Hot Boiler:

a) Open drain valve. Open steam and water valves far enough to allow a small amount of water and steam to pass through the gage for about 5 minutes. This permits a gradual warm-up of the SIMPLIPORT 4000.

b) Close the drain valve and finish opening the water and steam valves.

c) Check each port window for leakage, as in procedure 3b) above.

d) Mount Illuminator as described above in procedure 3c).

CAUTIONS:

1. **NEVER APPLY TORQUE TO SIMPLIPORT 4000 SERIES UNDER PRESSURE.**
2. **DO NOT HOT TORQUE ON SIMPLIPORT 4000 SERIES GAGES.**
3. **DO NOT TORQUE NUTS TO GREATER THAN 80 FT-LBS. TORQUE AS DESCRIBED.**
4. **EXCESSIVE BLOWDOWNS MAY SHORTEN GAGE SERVICE LIFE (Form E-156B).**

SIMPLIPORT 4000 SERIES COMPONENTS (Fig. 1)

1. SIMPLIPORT 4000 Body (Single Window Unit)
2. Module (RPW-87)
3. Spring Retainer (RPW-40)
4. Spring Washers (RPW-66)
5. Packing Nut (RPW-65)
6. Spiral-Wound Gasket (RPW-90)

Note: Packing Nut Assembly (RPW-68) includes (1) Packing Nut (RPW-65), (2) - 0.125" edge thickness Spring Washers (RPW-66), and (1) Spring Retainer (RPW-40).
****DO NOT USE P/N RPW-39: 0.078" EDGE THICKNESS BELLEVILLE WASHERS****

Note 2: Use only OEM replacement modules to retain design and maintain performance safety standards. See page two for additional maintenance information.

Figure 1

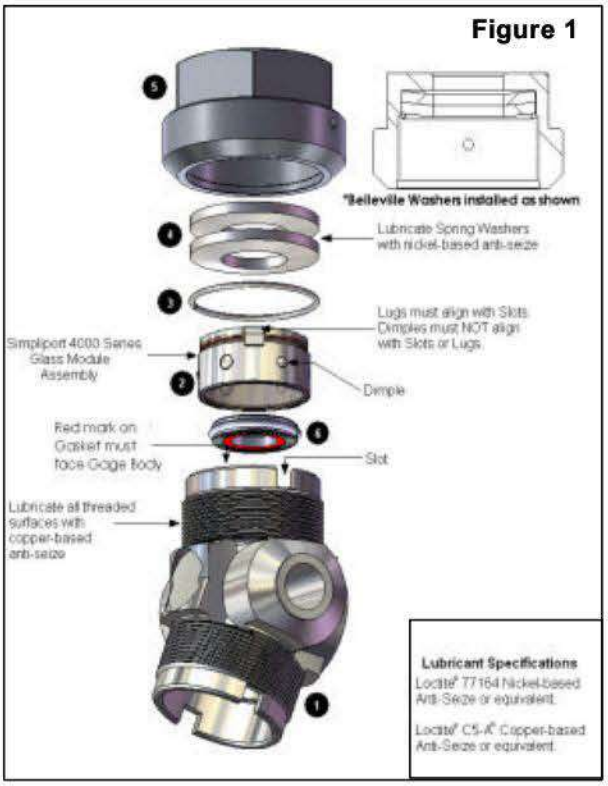

NOTE: Industrial Power Boilers are one of the most harsh environments for Level Gage Glasses. Actual service life will vary based on one or more of the following conditions: cycle frequency, temperature fluctuations, water quality, and other factors. Depending upon these factors, the average service life is from 6-18 months.
Complete gage rebuilds are suggested on an annual basis for personnel and plant safety. This can reduce the number of maintenance intervals caused by the need to replace individual glass modules.

VOGT POWER INTERNATIONAL
Released, Work May Proceed
Hugle, Kathy | Oct-17-2011

VOGT POWER INTERNATIONAL
V17460-ICXE-518-00
06-Oct-2011

INSTALLING SIMPLIPORT® 4000 SERIES REPLACEMENT MODULES

(required: Torque Wrench w/ 1-7/8" Socket, Special Pliers – P/N RPW-35, Lubricant – see steps 7 & 8)

1. Shut off the steam and water gage valves then open drain valve and drain the SIMPLIPORT 4000/4100 completely.
2. Remove Packing Nut containing 0.125" edge thickness Spring Washers – save for re-use.
3. Remove old module and discard. (use Special Pliers, P/N RPW-35)
4. Wipe recess in Gage Body with clean cloth; be sure that the gasket surface at bottom is perfectly clean and smooth. An electric drill with a medium grade 1" (25mm) diameter stainless steel wire brush may be used to polish the gasket surface, if necessary.
5. Insert Spiral Wound Gasket into gasket seat in Gage Body. **IMPORTANT –** Make sure the Spiral Wound Gasket is installed with the red indication mark facing towards the Gage Body. The red indication mark should **NOT** be visible when the Spiral Wound Gasket is installed correctly.
NOTE: A small amount of water applied to the red marked side of the Gasket will help hold the Gasket in place during installation.

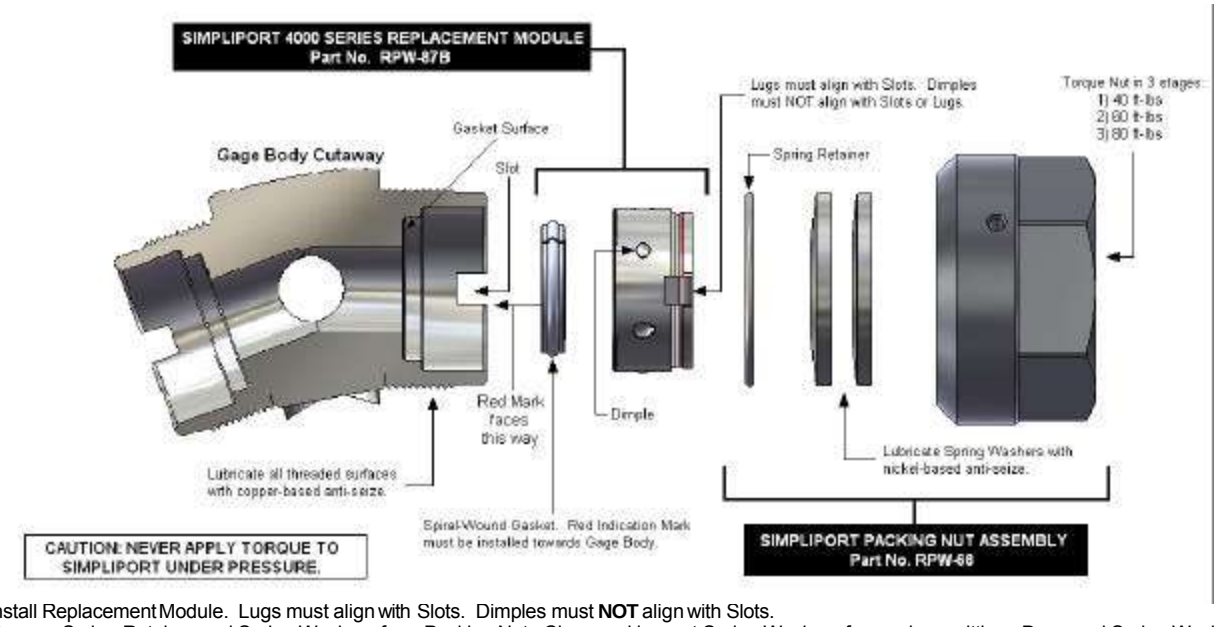

6. Install Replacement Module. Lugs must align with Slots. Dimples must **NOT** align with Slots.
7. Remove Spring Retainer and Spring Washers from Packing Nut. Clean and inspect Spring Washers for cracks or pitting. Damaged Spring Washers must not be re-used. **IMPORTANT: If replacing spring washers, use part # RPW-66 (.125" thick washers). Do not use part# RPW-39 (.078" thick washers).** Lubricate each Washer and Spring Retainer with Loctite® 77164 Nickel-based Anti-Seize or equivalent, and re-insert into the Packing Nut as shown above. Make sure Spring Retainer seats completely.
   A). Do not sandblast Spring Washers. Clean with solvent only in order to prevent the removal of the nickel plating
   B). Clean Packing Nut and Spring Retainer thoroughly with a soft wire brush. If excessive corrosion still exists or threads appear damaged, replace the Packing Nut assembly with a new one. Packing Nuts may be glass-bead cleaned to remove corrosion and dirt from threads.
8. Clean Gage Body threads with a soft wire brush and inspect for damage. Lubricate Gage Body threads and Packing Nut threads with Loctite® C5-A® Copper-based Anti-Seize or equivalent.
9. A) Install Packing Nut Assembly and turn Nut "finger-tight".
   B) Tighten Nuts in 3 stages: 40 ft-lbs first, 60 ft-lbs second, 80 ft-lbs last. Do NOT tighten Nuts completely from "finger-tight" to 80 ft-lbs.
   NOTE: After waiting about a minute, re-torque nuts at 80 ft-lbs.
10. Close the drain valve. Slowly open the steam and water valves and allow the SIMPLIPORT 4000/4100 to reach operating temp/pressure gradually (approximately five (5) minutes) and observe that no leakage is detected. Repair or installation of SIMPLIPORT 4000/4100 is now complete.

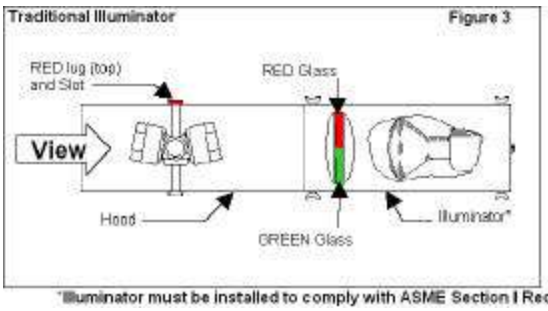

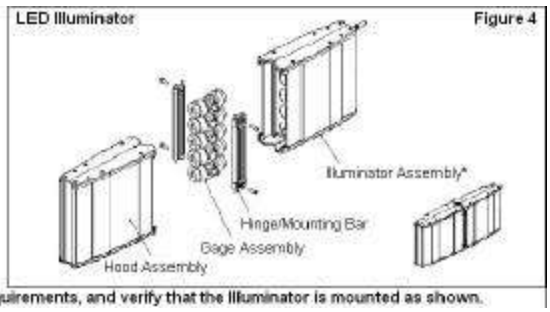

*Illuminator must be installed to comply with ASME Section I Requirements, and verify that the Illuminator is mounted as shown.

Notice to Plant Operators

The use of non-Original Equipment Manufacturer parts (such as glass, gaskets, probes, modules, etc.) will void the Agency Approval (FM, UL, CSA, CRN, ABS, etc.), pressure/temperature rating, and warranty of this equipment. Clark-Reliance requires the use of OEM parts for all repairs on this product in order to maintain plant and personnel safety, and reliable operation.

"PARTS-PLUS"

Critical spare parts for overnight delivery, direct from the manufacturer.

clark-reliance.com/parts

Steel Valve Repair Kit

Replacement Probes

Gage Glass Repair Kit

Simpliport Module

Simpliport Packing Nut

Replacement Relays

Probe Repair Kit

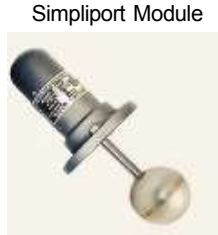

Replacement EA100 Ass'y

Replacement Micro-switch

Bronze Valve Repair Kit

Valve Packing

Replacement Floats

16633 Foltz Parkway Strongsville, OH 44149 USA
Phone (440) 572-1500 Fax (440) 238-8828
sales@clark-reliance.com www.clark-reliance.com

VOGT POWER INTERNATIONAL
V17460-ICXE-519-00
06-Oct-2011

Clark·Reliance®
Instrumentation and Controls Group
World's Leader in Boiler Trim Instrumentation

Reliance Simpliport Wide Angle Illuminator

INSTALLATION, OPERATING & MAINTENANCE INSTRUCTIONS

Section: R5400
Bulletin: R5400.E245A
Date: 10-05-2010
Supersedes: New

The Simpliport LED Illuminator Assembly has been designed to accept 120 or 240 VAC power sources and for a service life of up to 7 years. The LED Illuminators are weatherproof and are rated safe for use in ordinary locations

STORAGE and HANDLING

All units should be inspected upon receipt to ensure that no damage has been incurred during transit. If there is a claim due to damage, it should be filed with the carrier immediately. Units should be stored in a dry and sheltered area prior to installation, in a secure manner where they can neither fall, nor be struck by other objects. The temperature of the storage area should not exceed 170° F. (75° C.)

COMPONENTS

There are five main components that make up the Simpliport Illuminator Assembly: the LED Illuminator, the front end hood, the mounting bar assembly, the power supply, and the cable connecting the power supply to the LED Illuminator. The cable may have more than one piece depending on the required distance between the Illuminator and the power supply. In most cases, however, the power supply will be mounted directly to the LED Illuminator.

INSTALLATION

CAUTION: All LED Illuminators are tagged with the service conditions for that particular unit. This information is located on the power supply housing. The ratings should be reviewed prior to installation and again prior to start-up, to ensure proper operation in the installed environment. Should there be any doubt as to the applicability of a unit for the installed environment, consult the factory before placing the unit into service.

Note: All installation steps should be performed by a qualified technician and should be executed in accordance with all applicable national and local codes.

The LED Illuminator and power supply should be checked to ensure that they contain no foreign matter, and that the end connections are clean, undamaged, and in line with existing conduit.

Step by step instructions:

1) Assemble the mounting bar assemblies to the Simpliport Gage mounting lugs using the (4) 5/16" X 1" SHCS that are provided (Fig. 1).

2) To mount the LED Illuminator assembly to the gage: While holding the illuminator at a slight angle, slide illuminator top onto pins. Align bottom pins with slots and rest unit in place. **Note: The Simpliport Gage must be viewed with the packing nuts facing slightly to the left. Make sure the Illuminator and viewing hood are in the correct orientation to the Simpliport Gage. (Fig. 2)**

3) Repeat the procedure in Step 2 to mount the front end hood to the opposite side (viewing side) of the gage.

4) The unit's power supply has wire leads and a fuse ready to connect to the incoming AC power source. Remove the enclosure lid to access wiring. Connect incoming AC power source per local and National Electric Codes. The fused (red) wire is to be connected is the "Hot" and the remaining white wire is the "common".

5) The power supply can be remote mounted if desired. After remote mounting of power supply, if the blue power cord will not reach the power supply, contact your local representative or factory for the required extension cable.

VOGT POWER INTERNATIONAL	
Released, Work May Proceed	
Hugle, Kathy	Oct-17-2011

Clark·Reliance®
Instrumentation and Controls Group
16633 Foltz Industrial Parkway • Strongsville, OH 44149 U.S.A. • Telephone (440) 572-1500 • Fax (440) 238-8828
www.clark-reliance.com • sales@clark-reliance.com

Figure 1: Typical Simpliport Illuminator Installation

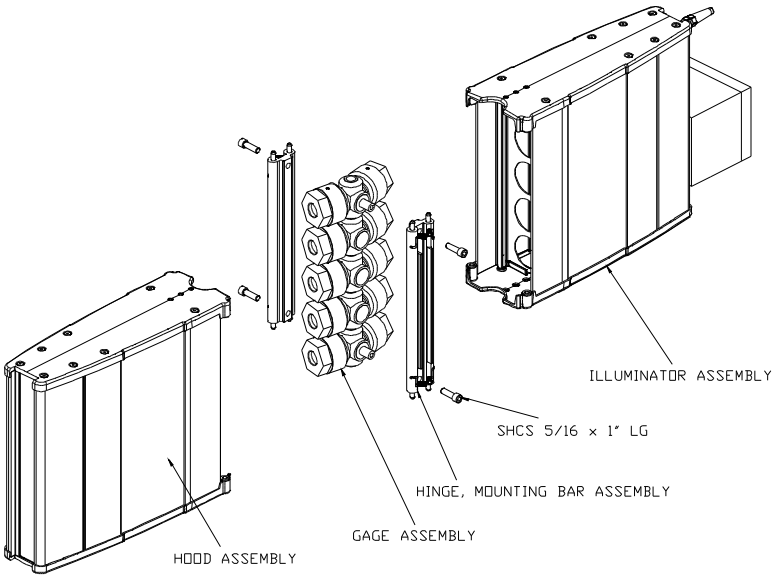

Figure 2: Viewing the Gage

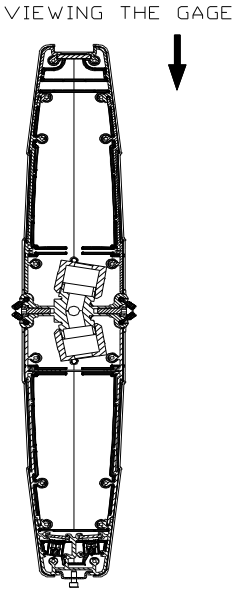

OPERATION

The Simpliport LED Illuminator can operate continuously. The operating life of the LED's is up to 7 years under normal conditions.

Customers may install a switch or a Reliance model TPS-XXX (120VAC or 240VAC) Timer Power Switch if desired. Any additional components must be installed prior to the customer's sealing fitting.

ROUTINE MAINTENANCE

Keep glass on the front of the front end hood and in the illuminator assembly clean using commercial glass cleaners, such as Windex® or similar. Never use harsh abrasives, wire brushes, metal scrapers, or any material that could scratch the glass.

The illuminator may be removed during inspection or maintenance of the customer's Simpliport gage. The LED Illuminator and the front end hood can both be removed by tilting at an angle to disengage the bottom slots and lifting up off of the top pins. Make sure that the hoods and illuminator are supported after removal. Damage can occur if either the front end hood or LED Illuminator is dropped.

SPECIFICATIONS

Power Supply:	120/240 VAC @ 50-60 Hz
Max Power Consumption:	500 mA
Est. Life:	Up to 7 years (continuous)
Agency Approvals:	FM/CFM Ordinary Locations
Wire Size:	Min 16 AWG
Max dist. from power supply to light:	72' (22 M) Standard Cable = 8' (2.5M)
Ambient Temperature:	-40 F (-40 C) to 170 F (77 C)

The use of non-Original Equipment Manufacturer parts (such as glass, gaskets, probes, modules, etc.) will void the Agency Approval (FM, UL, CSA, CRN, ABS, etc.), pressure/temperature rating, and warranty of this equipment. Clark-Reliance requires the use of OEM parts for all repairs on this product in order to maintain plant and personnel safety, and reliable operation.

http://parts.clark-reliance.com

Clark•Reliance
Instrumentation and Controls Group

Electro Eye Hye System Installation and Maintenance Instructions

Section: R500
Bulletin: 539CR2
Date: 9-3-2010
Supercedes: 539CR1

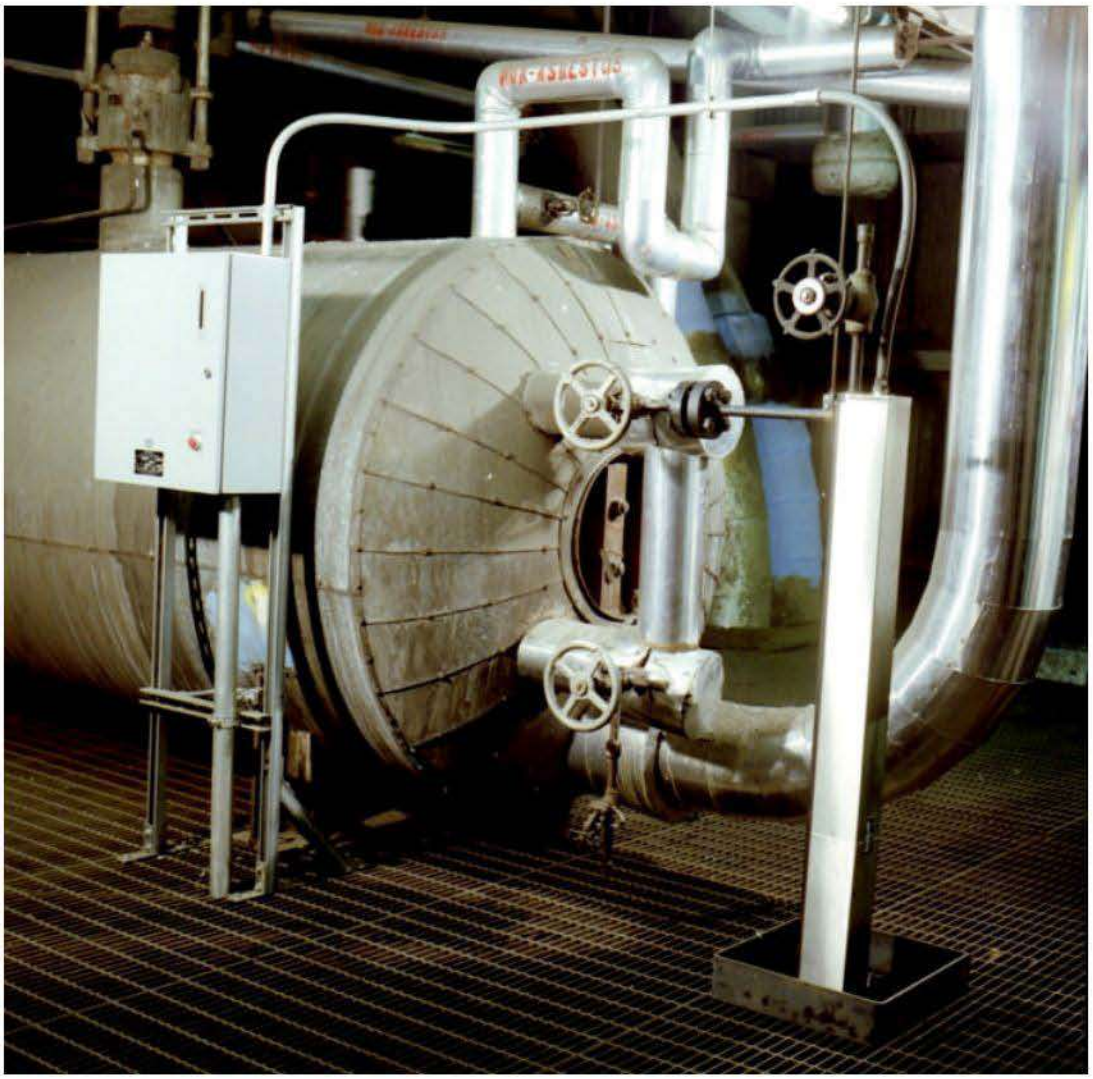

VOGT POWER INTERNATIONAL	
Released, Work May Proceed	
Hugle, Kathy	Jul-17-2012

VOGT POWER INTERNATIONAL
V17460-ICXE-527-00
05-Jul-2012

Table of Contents

SECTION	SUBJECT	PAGE
A.	Principle of Operation	3
B.	Components	4
C.	Unpacking and Inspection	4
D.	Hardware Installation	
	Electrolev Column	4
	Control Unit	4
	Remote Indicator Units	5
E.	Interconnecting Wiring	5
F.	Options	6
G.	Start Up and Operational Checks	9
H.	Maintenance	11
I.	Electrical Specifications	13
J.	System Power Consumption	15
K.	Trouble Shooting Guide	15

CAUTION !

The Electro Eye-Hye System has mains voltages present when the source power is connected. Take care at all times when the enclosure is open and power is applied.

Potentially dangerous pressures and temperatures are present when the Electrolev unit is in service. Insure isolation valves are closed and all pressure containing parts are vented to safe levels prior to beginning work.

If under pressure, the Levalarm should be isolated, or the boiler should be shut downbefore proceeding with the installation. Open drain valve to eliminate any trapped pressure. All installation steps should be performed by a qualified technician and should be executed in accordance with all applicable national and local codes.

REPLACEMENT PARTS WARNING

THE USE OF NON-ORIGINAL EQUIPMENT MANUFACTURER PARTS (SUCH AS GLASS, GASKETS, PROBES, MODULES, ETC.) WILL VOID THE AGENCY APPROVAL (FM, UL, CAS, CRN, ABS, ETC.) PRESSURE/TEMPERATURE RATING, AND WARRANTY OF THE EQUIPMENT. CLARK-RELIANCE REQUIRES THE USE OF OEM PARTS FOR ALL REPAIRS IN ON THIS PRODUCT IN ORDER TO MAINTAIN PLANT AND PERSONNEL SAFETY, AND RELIABLE OPERATION.

A.) Principle Of Operation

The **Electro-Eye-Hye** System utilizes the distinct electrical differences between water and steam to detect water presence. This is done by attaching a water chamber to a vessel (as a boiler steam drum) in which the water level is to be measured. The chamber will fill to the same level as the fluid in the main vessel.

This water chamber, called the **Electrolev** column, is fitted with a series of conductivity probes along its vertical length. Each conductivity probe is electrically connected to a detection circuit housed within the control unit. As the water level immerses the conductivity probes a circuit path is formed through the water and sensed by the detection circuits. Conversely, conductivity probes above the water level fail to provide an electrical circuit due to the relatively non-conductive properties of steam as compared to water.

The **Control Unit** contains the detection circuitry. As the detection circuits sense water presence, they operate control contacts within detector modules which provide indication and control functions.

The Eye-Hye System utilizes unique 'Multi-path' circuitry in which each conductivity probe is connected to its own dedicated detection circuit, control contacts and display drivers. Each circuit is enclosed in its own detector module housing. The power source for each detector module is individually fused to prevent the failure of any individual circuit from affecting other channels of the system. In addition to operational security, this provides for ease of maintenance, whereby a single channel can be repaired or replaced without needing to remove power from the entire system. A variety of supply power circuit arrangements are available to support the type and number of power sources the user requires.

Indication of the sensed water level is provided by lighted **Remote Indicators**. Two types are typically used: a single color vertical bank of lamps where a lighted red lamp indicates water and an unlit lamp indicates steam, or a bicolor display where a green lamp indicates water and a red lamp indicates steam. These indicators are typically placed at the control unit, feedwater or blowdown stations and in the control room.

Optional circuits for fault detection, analog outputs, fail safe, or redundant power distribution and latching pump control are also available.

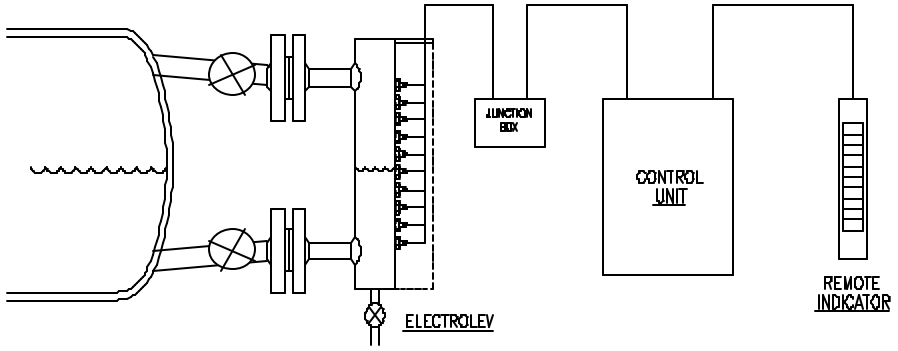

Fig. 1 EYE-HYE COMPONENTS & TYPICAL INSTALLATION

B.) Components:

The Electro Eye-Hye System consists of three primary items, which are:

1.) The Electrolev water column and Conductivity Probes.
2.) The Control Unit containing the Electro Eye-Hye electronic circuits.
3.) The local and remote Indicator(s) (type and number may vary based on system requirements).

C.) Unpacking and Inspection:

Upon receipt of the Eye-Hye System examine the containers for damage. Report any suspicious conditions as soon as possible to your carrier to avoid acceptance of damaged goods. Clark-Reliance will not be responsible for goods damaged in shipping or storage, or subsequent loss or damage due to improper storage or exposure as a result of damage to shipping containers.

Verify all materials are present as recorded on the Packing List provided with each shipment. Report any discrepancies to Clark-Reliance immediately. Have the Clark-Reliance order number and shipping waybill available at time of calling.

D.) Installation

1. The **Electrolev** should be installed on the boiler drum or vessel, as shown in Fig. 1. The distance between the Electrolev and the boiler drum should be kept to a minimum. A slope in the steam leg running from the drum or vessel towards the Electrolev of not less than 1 inch of fall for each 50 inches of linear length is recommended. The water leg should be installed with a downward slope running from the Electrolev to the drum or vessel. Care should be taken to insure no restriction or 'trap' occurs in the pipework which may lead to an accumulation of sediment, resulting in a restriction of flow to or from the Electrolev column. Isolation (Shut-off) valves should be installed to permit maintenance of the Electrolev while the vessel is pressurized. The standard vessel connections are 1" male pipe projections. Flanged or female socket weld connections are available options. A drain valve should be installed at the bottom of the Electrolev, as shown in Fig. 1. The standard drain connection on the Electrolev is 1/2" female socket-weld.

If the steam leg piping should be left exposed to encourage the formation of condensate flow to the Electrolev column (to promote heat transfer to minimize density related errors), it is recommended that shields or guards be fitted to reduce the risk of contact with hot surfaces. It is recommended that the water leg piping between the boiler drum and the Electrolev be insulated. Insulation will reduce the effects of cooling and will provide added personnel protection from hot piping. The Electrolev column may be insulated by field personnel, or with a Flexpak insulation jacket available from Clark-Reliance.

2. The **Control Unit** is provided in a variety of enclosures. Standard ECIL-**R model Control Units may be mounted up to 1000 feet away from the electrolev. The Control Unit should be mounted in an area that is accessible for inspection and below 150º F. Refer to the dimensional drawings specific to the materials ordered for mounting dimensions.

3. The **Remote Indicator(s)** should be mounted for ease of viewing by the operator in accordance with operational considerations and applicable codes. There is no practical distance limitation between the Control Unit and the Remote Indicator. All Remote Indicators are designed for panel mounting. Weatherproof enclosures are available for outdoor installations. Wall mounting brackets are also available from Clark-Reliance. Refer to dimensional drawings of specific products for panel cutouts and mounting dimensions.

E.) Interconnecting wiring:

1. Field Wiring from the Electrolev is terminated in the Control Unit at connector SK3. Connections should be made as illustrated on the field wiring diagrams provided for the specific equipment ordered. The Electrolev is furnished with a 30" length of high temperature wire leads exiting from the conduit connection. Longer leads are available as an option and may have been furnished on request.

Model	Wire Specifications
EL450, EL1000	18 GA. Stranded Teflon insulated conductors rated at 300 VAC and 200ºC / 392ºF
EL1800, ELF3000	18 GA. Stranded Teflon-treated glass braided rated at 600 VAC and 450ºC / 842ºF Nickel coated copper Conductor - UL #5107

High temperature probe to junction box wire specification

The high temperature probe wires should be routed to the Control Unit or a junction box (furnished by C-R, when specified).

Low temperature Multi-conductor cable may be routed from the junction box to the Control Unit. The number of required conductors is equal to the number of conductivity probes, plus one for the common connection. For example a twelve probe Electrolev would require 13 conductors. (note: for increased reliability a termination for a redundant common wire to the Electrolev is provided at the Control Unit. An additional conductor would be needed if this feature is employed.)

Model	Wire Specifications
EL450, EL1000, EL1800, ELF3000	18 GA. Stranded (Tinned Copper) PVC insulated, rated at 300 VAC and 60º C / 140º F

Junction box to control unit wire specification

2. The power connection to the Control Unit is suitable for 12 to 20 GA. wire. The power terminals provide for single or dual power source connections. Connect AC power source to SK4 L1A & L2A for single power source operation or when using the Power Source Diverter option. For split power source operation where one of two sources supply power to the odd or even channels, remove on board jumpers J1 & J2 and connect source #1 to SK4 L1A & L2A and source #2 to SK4 L1B & L2B.

3. Between the Control Unit and the Remote Indicator(s) the number of conductors required for a Remote Indicator equal the total number lamps plus one for a common conductor. For example, an MTI-12B Remote Bicolor Indicator has 12 red lamps, 12 green lamps, and one common. Therefore, 25 conductors are required. Connections for Remote Indicators are made at SK1 terminals 1 to 39. Refer to the Remote Indicator field wiring diagram furnished with the system for connections relating to the equipment supplied. Indicators may be wired in parallel, for multiple indicator installations. All Remote Indicators are powered with 24 VAC from the Control Unit

Model	Wire Specifications
All :STI, MTI & SMI models	18 GA. Stranded (Tinned Copper) PVC insulated, rated at 300 VAC and 60º C / 140º F (Belden #8468 or equal).

Remote indicator wire specification

4. Alarm and trip wiring is provided at SK2 terminals 1 to 36. A single form "C" contact is provided for generation of control and alarm functions for each channel. Contacts are rated at 5 Amp @ 120/240 VAC or 1 Amp @ 120 VDC., 5 Amp @ 30 VDC. Inter-connections between multiple channels can be made for various fail-safe or voting logic methods. Additional alarm and trip contacts can be obtained by using the contacts associated with the Remote Indicator circuits when no Remote Indicator is employed. *Insure that jumpers J4 through J15 are removed before using remote display driver circuits for alarm or trip functions.* Refer to the specific equipment assembly drawings provided with your system for further information on this feature. (Note: consult Clark-Reliance prior to using this feature).

F.) System Options

(Note: Refer to fig. 5 for location of system components.)

1. The **Flexpak Insulation** jacket provides a flexible insulation wrap for the Electrolev Column. This reduces heat loss and protects against accidental contact with hot surfaces on the Electrolev. The Flexpak can be specified with the original order, or ordered to retrofit an existing system. Flexpak jackets are designed for easy removal or installation with Velcro fasteners. When ordering for retrofit applications specify the serial number of the existing Electrolev. This information is located on the nameplate which is attached to the probe housing. The serial number will enable Clark-Reliance personnel to specify properly the Flexpack jacket for your application.

2. **Test Switch Circuits** are provided to enable operators / users to test indicator lamps and all relay circuits. On ECIL-**R models the test function is performed with an accessory printed circuit board attached to the PL 1 connector on the main control board. This board is field wired to a momentary normally open push button. The push button is furnished in a weather resistant enclosure for convenient mounting. 18 Ga. wire is sufficient for Test Switch interwiring. Refer to actual wiring diagrams for more details.

3. Models PSD-120 and PSD-240 **Power Supply Diverters** are designed to provide for continued operation of the Electro Eye-Hye with no loss of performance even in the event of the loss of a main power source. The primary source (A) will power the entire system under normal operating conditions. In the event of a power failure, the PSD diverts the power to the secondary source (B), and continues to power the system. When source (A) is restored, the PSD automatically switches back to source (A). A typical installation is illustrated in Fig. 2 below.

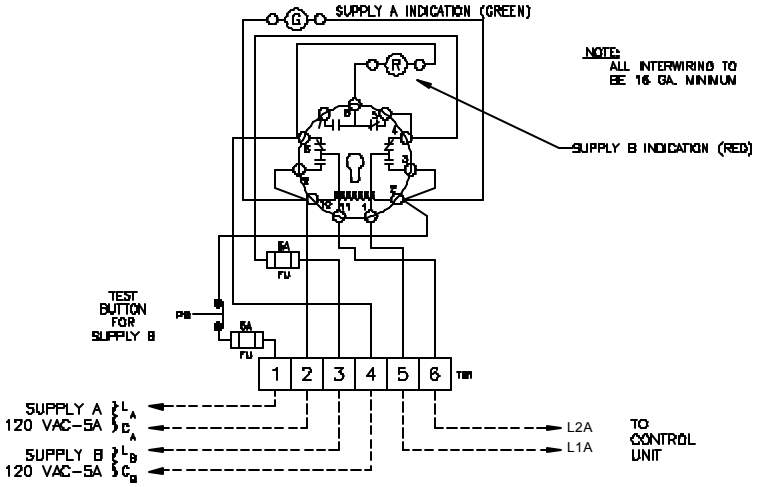

Fig. 2 Power Supply Diverter Wiring

4. The **Fault Detector** board (part # ECID-69/70) provides self diagnostic functions for the Eye-Hye Control Unit. This board plugs in by use of a ribbon connector to PL 2 on the main board and is mounted on the system's option DIN rail. AC power is connected at TB1 and can be connected to main board power at SK 4 or an independent AC source circuit based on design considerations. The microprocessor based unit performs full time examination of the Eye-Hye system to identify and provide alarm outputs for failures in the probe detection or power system. This checking is done completely separate from measurement and control functions. Unlike systems that use the same circuitry for measurement and fault detection, the Eye-Hye system is secure from "common-mode" circuit failures. A circuit failure in the control portion or the fault detection portion of the Eye-Hye will not go undetected or cause additional failures in the opposite circuits.

The Fault Detector board provides an integral slidewire analog output which is automatically ranged to 100% of the level measured in the Electrolev. The slidewire output is provided at TB 2. Consult option schematics for connection details.

5. The **System Exerciser** Box (part # ECID-71) is a set of toggle switches which provides a simulated electrode input to the Control Unit. The box is plugged into mainboard connector PL 1. With the Electrolev column drained or electrically isolated by removing connector SK 3, the switches on the System Exerciser Box can be toggled to simulate steam or water states, facilitating system checkout or analog calibrations.

6. The purpose of **Dead Band Relays** is to allow the user to enable an alarm or control function to be "turned on" at one level and to be "turned off" at another level. When dead band relays are specified, the Control Unit will be furnished with two additional relays, and all auxiliary contacts wired to terminal blocks. The Dead Band Relays will be identified on the Control Unit diagram as D.L. (Dead Low) and D.H. (Dead High). They will be as illustrated below in Fig. 3.

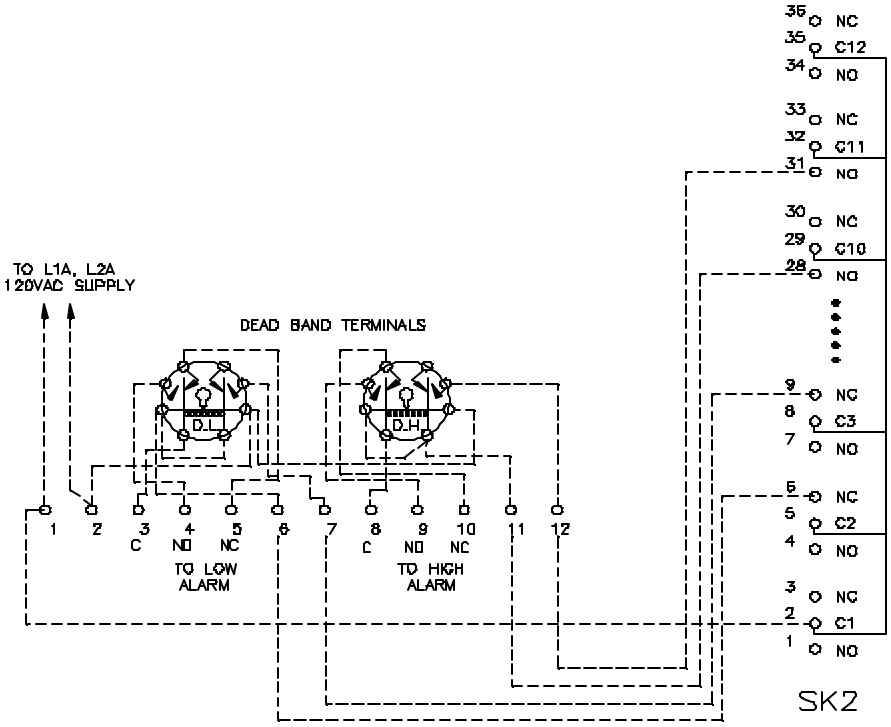

Fig. 3 Dead Band Wiring

The above example is wired to illustrate a high alarm when the water reaches the 11th probe, and will de-energize the alarm when the water drops below the 10th probe. The low alarm will be energized when the water drops below probe #2 and will remain energized until the level rises to the probe #3. The user may select a broader range between actuation levels to suit the operation.

7. The **4-20 mA Output Transmitter** (part # RPC-27) has been pre-wired at the factory to provide a digital signal output. This signal corresponds to the level in the Electrolev column. The output has been adjusted to provide equal increments of change between input levels.

The transmitter PC board has been designed with 21 field adjustable potentiometers (see Fig. 4). One potentiometer has been provided to fine tune the 4-mA output with no level in the electrolev (1). The remaining 20 potentiometers are numbered from 1 to 20. They correspond to the conductivity probes in sequence from the lowest to the uppermost (2). For example , if a 10 probe system is employed, then potentiometers #1 through #10 will be used.

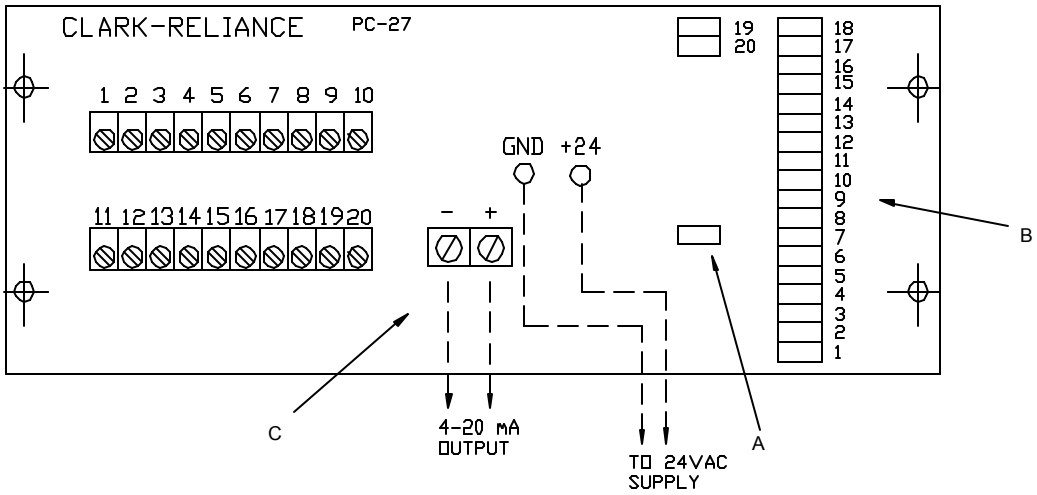

Fig. 4 4-20mA Output P-C Board

The adjustment procedure is as follows:

1. Isolate the 120 VAC supply from the control unit.
2. Valve out and drain the Electrolev.
3. Verify all the Probe leads from the Control Unit to the Electrolev.
4. Attach an ammeter to the signal output terminals (C) in proper polarity.
5. Return the 120 VAC supply to the control unit. At this time, no relays will be energized.
6. Adjust the potentiometer in the center (A) to obtain 3.85 mA on the meter.
7. Turn off 120 VAC supply.
8. Add a jumper wire from Electrolev probe #1 terminal to the Electrolev common. This will cause relay #1 to energize.
9. Restore power and adjust #1 potentiometer to desired output level.
10. Remove power and add next jumper from Electrolev Probe #1 to Probe #2.
11. Restore power and adjust #2 potentiometer to desired level.
12. Repeat the procedure used on probes #1 and #2 for each remaining probe, and adjust output levels until complete.
13. With power off remove all jumpers.
14. Return unit to service.

G. Startup and Operational Checks:

CAUTION !

The Electro Eye-Hye System has mains voltages present when the source power is connected. Take care at all times when the enclosure is open and power is applied.

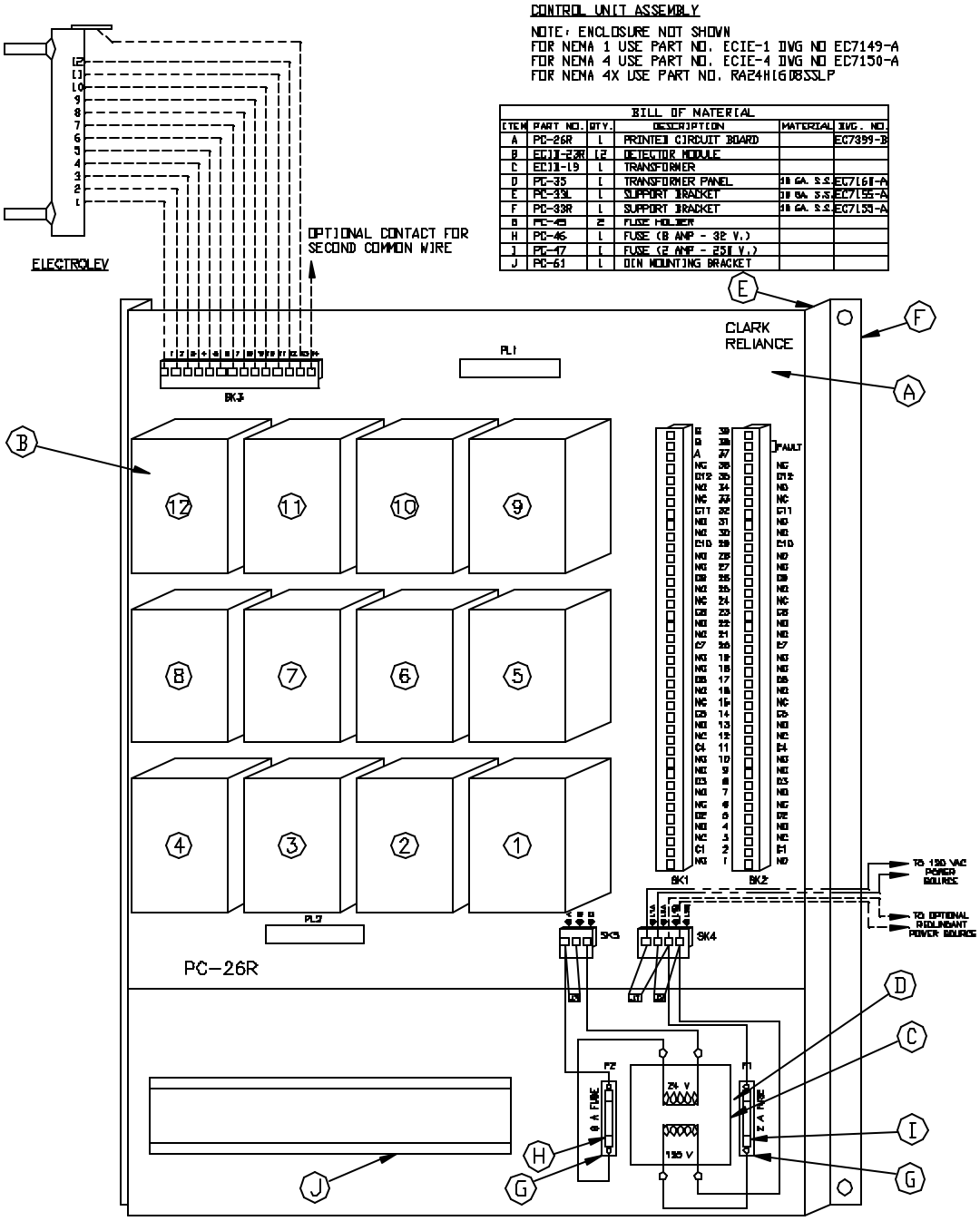

Fig. 5 Typical Control unit component arrangement (ECIL12R shown)

Electrolev Commissioning: Initial warm-up of the Electrolev column should be done gradually. To do this, keep the water valve closed, open the drain valve widely, and crack open the steam valve for a few minutes. Then, close the drain valve, and slowly open the steam and water valves fully. Check for any leakage at the conductivity probes.

Hot-torquing is recommended on all installations. After initial warm-up, the Electrolev column should be isolated and the drain valve opened. After insuring the column is drained and pressure relieved, re-torque T, V, or Z type probes to 40 Ft Lb., (54 Newton-Meters) and F type probes to 90 Ft Lb. (122 Newton-Meters) After torquing is complete, close the drain valve and return the Electrolev to service. Hot-torquing of the conductivity probes insures proper sealing and extends the sealing gasket life. Note: FSB probes do not require hot-torquing.

Control Unit and Remote Indicators: Verify all wiring is in accordance with drawings for the specific model Electro Eye-Hye and any installed options purchased. Remove the two tubular glass fuses at the power transformer and apply source power to the system. Verify AC source power is within specifications. Verify transformer output between source side of 8 amp fuse and SK 5 terminal "C" is between 24 and 32 VAC. Remove source power and install fuses. Re-apply power and observe the system is energized at the Local (if supplied) and Remote Indicators. Isolate the Control Unit from the Electrolev by removing SK 3 from the main board mating plug. By using the optional System Exerciser Box (see instructions provided with unit) or individually shorting between SK 3 terminal 13 and each of the terminals 1 through 12 in sequence verify a change of the detector status from steam to water by the illumination of the internal red LED within each of the detector modules and an indication of water on any Local and Remote Indicators. Remove all jumpers or System Exerciser Box and re-connect SK 3. Verify all indications agree with water level in the Electrolev.

H. Maintenance

1. **Cleaning:**

Blow down of the Electrolev column should be performed as needed to clear any accumulations of debris in the column and pipework. Blow down should be conducted weekly or less frequently, based upon water quality. Blow down is performed correctly by closing the water valve and slowly opening the drain valve for approximately 15-30 seconds. A brief blow down is sufficient. Excessive blow down may shorten the life of the probes.

2. **Probe Replacements:**

Clark-Reliance probes require very little maintenance. We suggest weekly blow downs of the water columns to prevent the build-up of contamination on the probes. A bypass switch can be installed on fuel cutout circuits. This switch will prevent a false trip during blow-down. The blow-down procedure is conducted thoroughly by closing the water valve and opening the drain valve slightly for about 20 seconds. (Refer to Clark-Reliance Form E156-B, "Recommended Blow-Down Practices for Water Columns, Electrolevs, and Water Gages)

If blowing-down of the column does not clean the probes sufficiently, use a stainless steel wire brush or fine emery cloth to clean the stainless steel rod portion of the probe. To clean the insulator, use a soft cloth and a mild detergent.

If probes are removed at any time for replacement or inspection, the sealing gasket must be replaced. Probe replacement kits are furnished with two spare gaskets. The gasket part numbers are as follows:

Probe Type	Gasket part Number
T	WCM-13
V	X175500 (Formerly E10-10)
ZG	E10-10S
FG	E10-10S

Replacing the probes:

1. Close both steam and water valves and drain the column before starting probe maintenance.
2. Remove probe to be inspected or replaced, after the column has cooled.
3. When replacing the probes, coat the threads lightly and uniformly with a high temperature anti-seize type lubricant such as 'Never-Seize', 'MolyCote G' or 'Fel-Pro C'
4. Torque the probes as follows:
    - Type T, V, ZG or ZB to 40 Ft-Lb. (54 Newton-Meters)
    - Type FG or FB Probes to 90 Ft-Lb. (122 Newton-Meters)

Hot torquing is suggested for all probes (except FSB). However, the column *must* be isolated from service with the drain valve open *before* re-torquing the probes.The hot torquing procedure will extend probe sealing gasket life and should be
performed as follows:

1. Partially open *steam* valve to warm up the column with the drain valve slightly open.
2. Close steam (and water) valves to isolate the column.
3. Open the drain valve completely.
4. Re-torque as instructed above.
5. Return to service by closing the drain valve and opening the steam and water valves.

<u>Note</u>: When installing the high temperature wire to the probe, use an open end wrench to prevent the probe assembly from turning while tightening the wire terminal nut. Use a ¼" wrench for both the compression nut and the terminal nuts on T and V type probes. ZG and FG type probes require a ½" wrench for the compression nut and a 3/8" wrench for the terminal nut.

Assembly Instructions for Model FSB Compression Type Probes

1) Remove the probe wire by loosening the terminal nut with a 3/8" wrench.
2) Insert Model FSB probe into compression fitting adaptor. Make sure that the sealing surface on both the probe and the fitting adaptor are free of any debris.
3) Do not lubricate threads on either the nut or the fitting adaptor.
4) Place the coupling nut on to the probe turn on until hand tight. Then, using a 1 1/8" wrench, turn the nut an additional 1/4 turn. No specific torque value is required.
5) The coupling nut must be replaced when a new probe is installed. A new coupling nut is furnished with each replacement probe.
6) Replace the probe wire, lock washer, and terminal nut. Note: use a 1/2" wrench to hold the Probe Assembly Nut from rotating while tightening the Terminal Nut.
7) Hot torquing is not required with Compression Type Probes.

3. **Control Units**

Control Units require no maintenance. Test switches may be activated at any time.

4. **Indicators**

The standard type (STI Series) Indicators utilize 30 volt incandescent lamps, C-R part no. LI2-5B, or LED style lamp, part no. LI2-9. Indicators that are of the sub-miniature or miniature models employ LED's and contain no replacement parts.

I. Electrical Specifications

Enclosure Design: NEMA 1 (standard)
NEMA 4, 4X & 7 (optional)

Temperature Rating: -40 to +150ºF / -40 to 65ºC

Supply Voltage: 120 VAC 50/60 HZ (standard) 240 VAC 50/60 HZ (option)

Supply Current: 4.4 VA

Contact Design: DPDT (2 form C)

Contact Ratings: 5A @ 120, 240 VAC, 5A. @ 30 VDC., and
1A. @ 120 VDC.

Contact Life: Mechanical - 5 million operation Electrical - 100,000 operations min. at full load.

Probe Circuit Current: 1.5 mA @ 12 VAC per probe.

Sensitivity: 50,000 Ohms

Listing: Factory Mutual #2N2A4.AF, CSA # LR14001, and UL listed Detector Modules

SPECIFICATIONS

Control Design: Solid State components enclosed in a clear Lexan plug-in style housing. Housing carries no NEMA rating.
Contact Design: DPDT (2 form C): two normally open (N.O.) and two normally closed (N.C.) non-powered contact.
Contact Ratings: 5A @ 120, 240 VAC resistive, 1/10 H.P. @ 120, 240 VAC, 5A @ 30 VDC.
Contact Life: Mechanical – 5 million operations. Electrical – 100,000 operations minimum at rated load.
Supply Voltage: 24, 120, and 240 VAC models 10%, minus 15%, 50/60 Hz.
Supply Current: 24, 120, and 240 VAC, Relay energized 4.4 VA
Secondary Circuit: 12 VAC RMS voltage on probes, 1.5 milli-amp current.
Sensitivity: Models operate from 0 – 100,000 OHM maximum specific resistance.
Temperature: -40 to 150° F. ambient.
Terminals: All connections #6-32 screw type terminals with pressure clamps
Listings: U.L. listed, Industrial Motor Control (508), CSA approved Industrial Control.
LED Terminal Output: Probe in water, +12VDC, Probe out of water, -12 VDC.

ECID-__R Control Relay Module Information

SUFFIX	SENS. (ohms)	MODE	SUPPLY
-22R	26K	DIRECT	120VAC
-23R	50K	DIRECT	120VAC
-24R	100K	DIRECT	120VAC
-25R	26K	INVERSE	120VAC
-26R	50K	INVERSE	120VAC
-27R	100K	INVERSE	120VAC
-28R	26K	DIRECT	24VAC
-29R	50K	DIRECT	24VAC
-30R	100K	DIRECT	24VAC
-31R	26K	INVERSE	24VAC
-32R	50K	INVERSE	24VAC
-33R	100K	INVERSE	24VAC
-116	26K	DIRECT	240VAC
-56R	50K	DIRECT	240VAC
-121R	100K	DIRECT	240VAC

For other relay models, please contact the factory.

INSTALLATION

- Install octal socket in appropriate enclosure using two (2) #6 or #8 metal screws.
- Wire control per wiring diagram, following N.E.C. and local codes.
- Install control module in socket.

SENSITIVITIES VS MAXIMUM PROBE WIRE DISTANCE

SEN. (K ohms)	DISTANCE (ft.)
26	2,200
50	1,075
100	570

DIMENSIONAL DIAGRAM

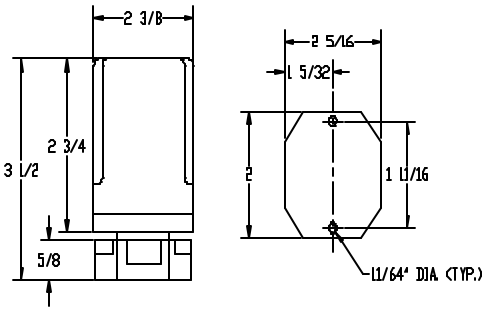

USE COPPER (60/75°C) WIRE ONLY. TORQUE TO 20 INCH POUNDS.

J. System Component Supply Current:

Part #	Component	Current @ 120 VAC
ECIL-10R	Control Unit	.37 A
ECIL-12R	Control Unit	.44 A
ECIL-20R	Control Unit	.74 A
SMI-10BR	Sub-Miniature Indicator	.04 A
SMI-12BR	Sub-Miniature Indicator	.04 A
SMI-20BR	Sub-Miniature Indicator	.06 A
MTI-10	Miniature Indicator	.09 A
MTI-12	Miniature Indicator	.10 A
MTI-20	Miniature Indicator	.18 A
MTI-10B	Miniature Indicator	.09 A
MTI-12B	Miniature Indicator	.10 A
MTI-20B	Miniature Indicator	.18 A
STI-10	Standard Indicator	.38 A
STI-12	Standard Indicator	.45 A
STI-20	Standard Indicator	.76 A

K. Trouble - Shooting Guide

Symptom	Probable Cause	Corrective Action
1. Indicator Lamp illuminated above level, or remains on during blow-down	1 A) Failed/Short-circuited probe	1 A) Remove probe and clean if contaminated, or replace if leakage is detected.
	1 B) Shorted/Open circuit in field wiring	1 B) Check all wires and connections for short circuits and proper connections
2. Indicator lamp out at any level	2 A) Single Lamp failure on STI Series indicator	2 A) Replace lamp P/N: LI2-5B
	2 B) All Indicators not illuminated due to power out or loss of signal or ground wire.	2 B) check 8 amp fuse on power panel in control unit. Verify all wiring and terminations.
	2 C) Single LED not illuminated on models with LED indicators, problem is either failed LED, faulty detector module or wiring problem.	2 C) Replace detector module. Verify all wiring and terminations. Replace remote display (unit is not field repairable)
3. Control circuits inoperative	3 A) faulty detector module or open wiring circuit	3 A) Replace detector module. Verify all wiring connections.

Consult the factory or your local Clark-Reliance Representative with any questions. Technical questions can be promptly answered, if the caller provides the system serial number (Example EE - _ _ _ _ _) or the drawing numbers.

Clark•Reliance®

Notice to Plant Operators

The use of non-Original Equipment Manufacturer parts (such as glass, gaskets, probes, modules, etc.) will void the Agency Approval (FM, UL, CSA, CRN, ABS, etc.), pressure/temperature rating, and warranty of this equipment. Clark-Reliance requires the use of OEM parts for all repairs on this product in order to maintain plant and personnel safety, and reliable operation.

"PARTS-PLUS"

Critical spare parts for overnight delivery, direct from the manufacturer.

clark-reliance.com/parts

Steel Valve Repair Kit

Replacement Probes

Gage Glass Repair Kit

Simpliport Module

Simpliport Packing Nut

Replacement Relays

Probe Repair Kit

Replacement EA100

Replacement Micro-switch

Bronze Valve Repair Kit

Valve Packing

Replacement Floats

16633 Foltz Parkway Strongsville, OH 44149 USA
Phone (440) 572-1500 Fax (440) 238-8828
sales@clark-reliance.com www.clark-reliance.com

Operation of the PC-27 (4-20 mA) Output Board

The PC-27 is designed to provide a 4-20 mA output signal, when interwired to an ECIL type Electro Eye-Hye Control Unit.

The operation of the unit is to provide a 4 mA output, when the water in the column is below the lowest probe, and a 20 mA output, when the highest probe is in contact with water. The 4-20 mA output is often specified, in order to use a two-wire signal from the control unit to the display or system interface. This output signal can be wired to a bar graph display (supplied by others) or into a DCS (Distributive Control System). The maximum output load for the PC-27 is 300 ohms.

The PC-27 is designed with set point potentiometers for the following purposes:

- One potentiometer is located in the center of the board, which is used to adjust the 4 mA output for the board, when the water is below the lowest probe.

- There are 20 additional set point potentiometers, one for each probe. They are numbered from 1 to 20. A 10 probe system would use potentiometers numbered from 1 to 10. There is enough range in the potentiometers so that 10 to 20 can be used, in order to obtain the full range from 4 to 20 mA of output.

The reason for one potentiometer for each probe is to provide the capability to fine tune the output for each probe level, as desired. Also, to permit precise output levels for probe columns with probes that are not equally spaced. For example, a user may require 1 mA of output from probe 4 and 3 mA of output from probe 6.

The concept of the design is a "summing" circuit. In other words, as the level rises in the column, each probe level contributes an additional amount to the output. If a particular probe circuit fails, the amount of output error will be equal to the amount of contribution of that particular probe. For example, a 16 probe system with equally spaced probes would be set with 1 mA of output from each probe, and if the actual level was between probe number 8 and 9, the output would be 12 mA. In that scenario, if probe number 11 shorted out, then the output would increase to 13 mA, or if a probe wire became disconnected from probe number 2, then the output would be 11 mA.

The PC-27 is powered from the 24 VAC power transformer in the control unit, and receives inputs that are wired in parallel to the water indicator output terminals (normally open contacts) on the SK1 terminal block on the PC-26R printed circuit board in the ECIL control unit.

VOGT POWER INTERNATIONAL	
Released, Work May Proceed	
Hugle, Kathy	Oct-17-2011

Form E209-A

VOGT POWER INTERNATIONAL
V17460-ICXE-550-00
06-Oct-2011

THE
Clark·Reliance
CORPORATION
16633 FOLTZ INDUSTRIAL PARKWAY • STRONGSVILLE, OHIO 44136, U.S.A.
TELEPHONE (216) 572-1500 • TELEX 985-317 • FAX (216) 238-8828

Adjustment & Operating Instructions for the PC-27:4-20mA Output

Adjustment Instructions for the 4-20mA Signal Output Function of the Electro-Eye-Hye System

4-20mA Accessory Part No. PC-27

The 4-20mA signal output is adjusted in equal increments at the factory prior to shipment. A user may wish to modify or fine-tune the adjustments in the field.

The PC-27 has been designed with 21 adjustable potentiometers. One potentiometer is located near the center of the printed circuit board. This potentiometer is used to fine-tune the 4mA signal output when there are no relays energized. In other words, the water level is below the lowest probe in the electrolev. The remaining 20 potentiometers are numbered from 1 to 20. They correspond to the probes in sequence from the lowest to the uppermost. For example, if a 10 probe system is being used then, the potentiometers numbered 1 through 10 will be used.

The adjust procedure is as follows:

1. Isolate 120V.A.C. supply from the control unit.
2. Disconnect all the probe leads from the control unit including the common or disconnect them from the probes.
3. Attach an ammeter to the signal output contacts in proper polarity.
4. Return 120V.A.C. supply to the control unit. At this time, none of the relays will be energized.
5. Adjust the potentiometer located in the center of the printed circuit board to obtain a 4mA output.
6. Add a jumper wire from the number 1 probe contact to the probe common contact. At this time the number 1 relay will energize.
7. Adjust number 1 potentiometer to obtain desired output.
8. Add a second jumper from number 2 probe to the probe common and adjust the number 2 potentiometer to obtain the desired output.

VOGT POWER INTERNATIONAL
Released, Work May Proceed
Hugle, Kathy
Oct-17-2011

VOGT POWER INTERNATIONAL
V17460-ICXE-551-00
06-Oct-2011

9. Continue to add jumpers cumulatively and perform the corresponding adjustments.

10. Upon completion of the adjustments, isolate 120V.A.C. from the control unit.

11. Remove all jumpers.

12. Reconnect any original wires that were removed.

13. Return unit to service.

Operating Instructions

Upon completion of the field adjustments, the PC-27 will not require any further maintenance.

The PC-27 receives its power from the 24 volt transformer located in the control unit. The PC-27 responds to change in the water level through the indicator circuitry.

Specifications:

- Printed Circuit Board Construction 4" x 11-3/4"
- Input: 24V.A.C
- Output: 4-20mA
- Maximum cable length for output is 150 feet.
- Suggested cable for output: 18 ga stranded two conductor

If any questions arise, contact your local representative or the Clark-Reliance factory.

Clark•Reliance®
Instrumentation and Controls Group

16633 Foltz Industrial Parkway • Strongsville, Ohio 44149, U.S.A. • Telephone (440) 572-1500 • Fax (440) 238-8828
www.clark-reliance.com

Recommended Storage and Handling Procedures for Jerguson Gages and Valves

1. Upon receipt of materials, open crates / boxes and inspect all materials to ensure no damage has occurred during transit. Based upon shipping terms, file a claim with Clark-Reliance or the applicable freight carrier for damages.
2. Replace and fasten down lid of crate / box.
3. Store all materials in a dry, clean indoor environment, protected from the elements or corrosive fumes.
4. Materials shall remain inside of the crate / box until it is ready to be installed.
5. Materials should be stored in a place where they can neither fall or be struck by falling objects.
6. Some gasket materials have a 5 year shelf life. Units should not be stored beyond 3 years.
7. Some sight gages are shipped unassembled, as they are to be welded into position and then assembled. Individual pieces should be carefully stored in a manner to avoid damage or loss until installation is required.
8. Gage glass requires special attention. It should not be stored or mixed with objects that may cause damage and should remain wrapped or boxed until use.

VOGT POWER INTERNATIONAL	
Released, Work May Proceed	
Hugle, Kathy	Oct-17-2011

VOGT POWER INTERNATIONAL
V17460-ICXE-552-00
07-Oct-2011

JERGUSON® JACOBY·TARBOX® MAGNE-SONICS® Clark•Reliance®

330-51
10/15/08

Quest-Tec Solutions
The New Standard of Level

Glass-Trac | Steam-Trac | Level-Trac | Magne-Trac

INSTALLATION, OPERATION AND INSTRUCTION MANUAL

Level-Trac Model LT-500 and LT-501 Probe Manifolds

Table of Contents

Section	*Page*
1. Operating Principle	2
2. Mechanical Installation Considerations	2
3. Installation & Cabling	2
4. Probes	2
4.1 Probe Maintenance	3
4.2 Probe Removal	3
4.3 Probe Installation	3
4.4 Bringing the Manifold On-Line	3

Figs	*Page*
1.1 Sensing Element	2
1.2 Water Level Monitoring	2

VOGT POWER INTERNATIONAL	
Released, Work May Proceed	
Hugle, Kathy	Oct-20-2011

Note: This document should be reviewed in its entirety prior to installation of equipment.

VOGT POWER INTERNATIONAL
V17460-ICXE-553-00
17-Oct-2011

Mailing Address: PO Box 2127 • Stafford, TX 77497-2127 • USA
Physical Address: 4003D Greenbriar • Stafford, TX 77477 • USA
Telephone: +1 (281) 240-0440 • Facsimile: +1 (281) 240-2440 • Email: sales@questtecsolutions.com
Www.questtecsolutions.com

1. **Operating Principle**

Quest-Tec Level-Trac LT-500/501 probe manifolds are a simple devices designed to position conductivity probes per customer specifications. In general, the probe manifold is mounted to a steam drum via a steam and water leg with at least one set of isolation valves. The probes are horizontally placed on the manifold, and when coupled with the correct control unit, will simulate the water level within the steam drum.

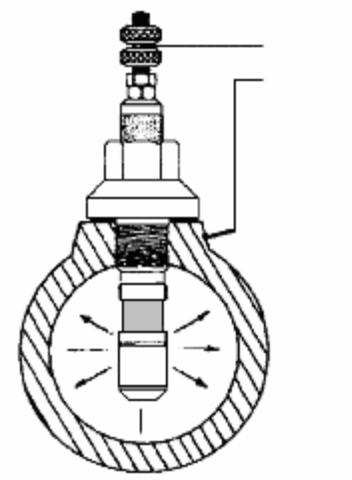

Figure 1.1

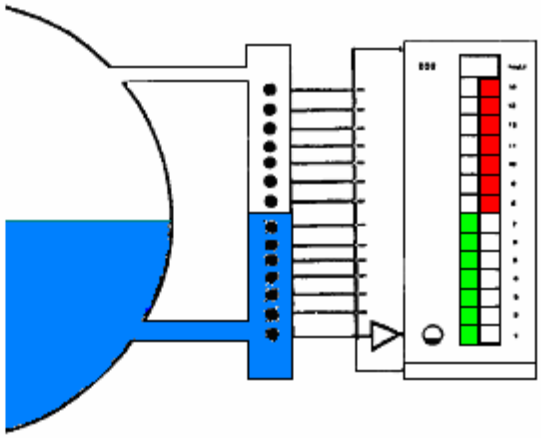

Figure 1.2

Figure 1.1 above shows a cross sectional view of a probe, as mounted to the probe manifold. Figure 1.2 illustrates the level of water in the probe manifold with respect to the steam drum and installed control unit.

2.0 Mechanical Installation Considerations

There are compliance considerations respective to ASME Section I PG 60. A current revision should be reviewed prior to purchasing a probe manifold, along with any specific local requirements. Level-Trac and Steam-Trac equipment is specifically designed in compliance with ASME Section 1, however Quest-Tec cannot be responsible for compliance issues with regard to installation and piping to the equipment.

The steam and water leg lengths should be kept to a minimum, and must be installed with at least one set of isolation valves to allow service to the manifold and any water gauge glasses mounted on the manifold.

3.0 Installation & Cabling

Pre-terminated, high temperature multi-conductor cable/wire bundles are available for the probe manifold. It is recommended that the wires are taped to the 1/4" vertical tie rods using high temp tape. The common connection should be made at the 1/2” nut supplied on the top probe cover support. For clarity, please refer to the specific wiring diagram referencing the Control Unit to be used.

4.0 Probes

The LT-500 or 501 probe manifold are identical in all mechanical respects, with the exception of the probe type used. LT-500 manifolds will use the Type 800, TFE insulated probe rated for Working Steam Pressure to 1000 PSI. LT-501 manifolds will use the Type 801, brazed, zirconia insulated probe rated for Working Steam Pressure to 2000 PSI. The probes are interchangeable, so care must be taken that the intended probe is used.

4.1 Probe Maintenance

Typical probe maintenance is limited to ensuring that the probes are clean. This can be accomplished by gently blowing down the manifold, or removal an re-installation. Individual installations will have site specific water quality, and this should be performed either “as needed” or per established maintenance cycle.

4.2 Probe Removal

Probe removal requires isolation and draining of the probe manifold.

1. Prior to isolating the probe manifold, ensure that there will be no false alarm ramifications that could lead to expensive boiler trips.
2. Upon isolation of the probe manifold, drain all water out. Keep the drain open until probes have been re-installed.
3. Remove the probe covers.
4. Disconnect the probe wire(s).
5. Using a 3/4” deep socket, remove the probe.

4.3 Probe Installation

1. Clean the threads and gasket sealing surface on the probe manifold.
2. Clean and lubricate the threads on the probe.
3. Thread the probe and gasket into the manifold hand tight.
4. Torque the probe to 53 ft/lbs.
5. Re-attach probe wires.
6. Replace Probe covers

4.4 Bringing the Manifold On-Line

1. Notify personnel of the intention to commission the Water Level Monitoring System.
2. Ensure Probe Guards are in place.
3. Close Drain Valves.
4. Slightly crack open the Steam Isolating Valve and observe by the Display that the manifold fills slowly due to condensation (15 minutes +).
5. After 15 minutes crack open the Water Isolating Valve and check with Display that the water level falls to the expected NWL in approximately 2 minutes.
6. Check valves and probes for steam leaks. **Tighten probes if necessary.** If steam leaks from the probe top insulator replace probe.
7. Open Water Isolation Valves fully.
8. Open Steam Isolation Valves fully.
9. The System is now operational.

Spare Parts	
P/N	Description
QTLT-PR800	Type 800, TFE Insulated Probe (For LT-500 Manifold)
QTLT-PR801	Type 801, Brazed Zirconia Insulated Probe (For LT-501 Manifold, or to upgrade LT-500 Manifold)
QTLT-801G	Probe Gasket, Type 800 or Type 801

13p60 South Wayside • Houston, TX 77048 • USA
Telephone: +1 (281) 240-0440 • Facsimile: +1 (281) 240-2440 • Email: sales@questtecsolutions.com
Www.questtecsolutions.com

INSTALLATION, OPERATION AND INSTRUCTION MANUAL

Level-Trac Model LT-310 Control Unit

1.0	Operating Principle	2
2.0	System Configuration	2
2.1	Channel Assignment	3
2.2	Alarm/Trip and Fault Detection Relays	3
2.2.1	Alarm Relays	3
2.2.2	Trip Relays	3
2.3	Sensitivity	3
2.4	Test Switches	4
2.5	System Fault	4
2.5	Process Fault	4
3.0	Installation & Cabling	4
3.1	Enclosure	
3.2	Main Power Supply	4
3.3	Wiring Control Unit to Probes	5
3.4	Wiring Alarm/Trip Relays	6
3.5	Panel Mount Remote Indicator	7
4.0	Commissioning	7
6.0	System Specification	8
7.0	Field Programming	9
7.1.	Discriminator PCB	9
7.2.	Power Supply/Relay PCB	10

Figures

1.1	System Overview	2
3.3.1	Wiring Control Unit to Probes	5
3.3.1	Wiring Alarm/Trip Relays	6

Appendices

Appendix A: Instructions for Mounting Stahlin Enclosures	11
Appendix B: 16 Conductor High Temp Cable Specification	12

VOGT POWER INTERNATIONAL	
Released, Work May Proceed	
Hugle, Kathy	Oct-20-2011

Note: This document should be reviewed in its entirety prior to installation of equipment.

13960 South Wayside Drive • Houston, TX 77048 • USA
Telephone: +1 (281) 240-0440 • Facsimile: +1 (281) 240-2440 • Email: sales@QTSLevel.com
www.QTSLevel.com

1.0 Operating Principle

The Level-Trac LT-310 is a remote level indication system, as described in ASME Section I, PG-60. The system may also be used as an alarm or trip device.

Discrimination between water and steam is based on the significant difference in resistivity between the two states over the saturation range. The sensing element is a probe with an insulated tip inserted in a probe manifold (Figure 1.1.) If a voltage is applied to the probe tip, conduction occurs between the tip and the inside wall of the column, resulting in an indication of water. Probe and manifold dimensions are selected to provide a resistance typically less than 100 KΩ when the probe is immersed in water, as compared to a resistance greater than 5 MΩ when in contact with steam. An electronic discrimination circuit is arranged to sense whether the Probe resistance is less than 100 KΩ representing water or greater than 5 KΩ representing steam.

With probes spaced vertically in a manifold attached to the boiler (Figure 1.1) and with each probe connected to its own sensing and water/steam indication circuit, a vertical display of Green/Red indicators provides a simulation of water level in the steam drum. Spacing between probes is per customer requirements to cover the visible range and alarm or trip points.

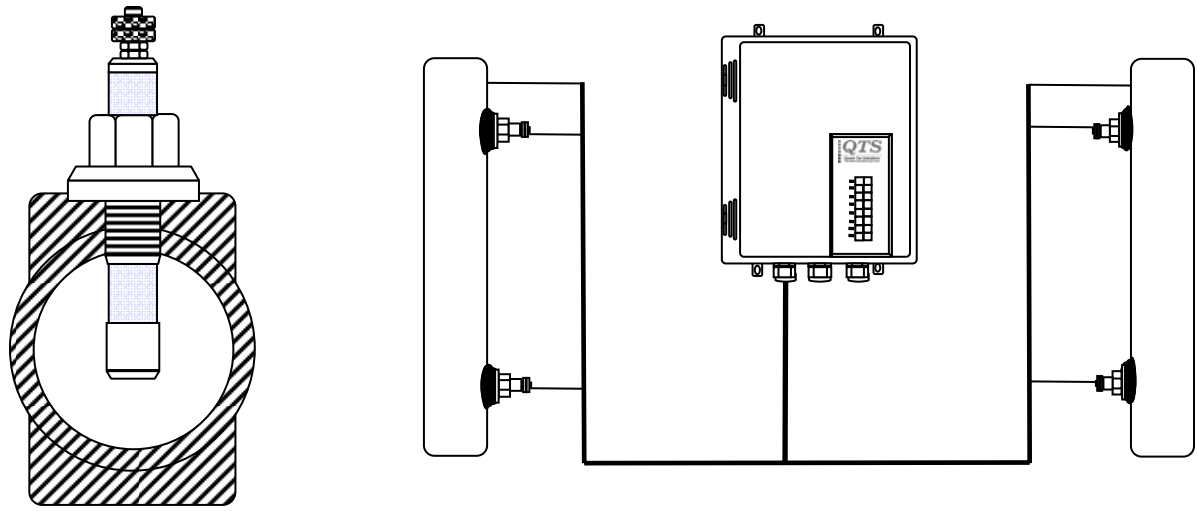

Typical Probe Manifold
Cross Section

Control Unit
4 probes from two sources

Figure 1.1

2.0 System Configuration

Probes are installed in the probe manifold. A length of high temperature wire connects the probes and the manifold to the control unit. The probe manifold itself serves as a common conductor. The presence of water will complete a circuit between the manifold and the probe tip. The LT-310 is designed with the flexibility to control six probes from up to six places with complete discrete settings.

Two printed circuit boards contained in a NEMA 4X (IP65) wall mounted enclosure provide up to 6 discrete water/steam discrimination circuits, LED display, relay alarm/trip outputs, fault detection and terminals for the connection of a remote display Unit.

To avoid galvanic interaction with the probe and variations in sensing voltage due to changing electrolytic potentials, an alternating voltage source is applied to the probe and the sensing circuit responds only to an alternating waveform. Two low frequency oscillators are provided for the source voltage; one drives the odd numbered channels and the other the even numbered channels. The voltage applied to the probe is less than 6 volts, current limited to 50 µA, and presents no risk to personnel.

The LT-310 is designed for use with two discrete power sources. In the event of failure of one power source, the remaining power source will maintain all system functions.

2.1 Channel Assignment

Alarm/Trip State: Each channel is individually assigned an alarm/trip state, wet or dry.

Cable Monitoring: Each probe is individually set as normally wet or dry. Normally wet probes require one conductor and normally dry probes require two.

2.1 Local Indication

Each channel output drives a green LED for water or a red LED for steam, along with yellow flashing LEDs for system and process fault, to a door mounted display.

2.2 Alarm/Trip and Fault Detection Relays

Seven 8A DPDT relays are supplied to provide contacts for alarms, trips or system fault annunciation.

RL1 through RL6 are independently selected to operate in energized (failsafe) or de-energized normal state. When operated in the energized state, trip will occur in the event of power loss to the system.

RL1through RL6 are independently set to delay 1 second, 5 seconds, 10 seconds or 15 seconds.

RL7 System Fault, is set to a normally energized state with a delay of 15 seconds; these functions are not adjustable.

2.2.1 Alarm/Trip Modes

RL1through RL6 can be set to operate on a single channel state or in channel pairs. The following table shows the options and pairing.

Relay	*Alarm/Trip*		
	Single Channel	*Channel Pairings*	*Voting Logic* *2 out of 3 Channels*
RL1	Channel 1	Channels 1 & 2 Channels 1 & 3 Channels 2 & 3	Poll Channels 1, 2 & 3
RL2	Channel 2	Channels 1 & 2 Channels 2 & 3 Channels 1 & 3	Poll Channels 1, 2 & 3
RL3	Channel 3	Channels 2 & 3 Channels 3 & 4 Channels 2 & 4	Poll Channels 2, 3 & 4
RL4	Channel 4	Channels 3 & 4 Channels 4 & 5 Channels 3 & 5	Poll Channels 3, 4 & 5
RL5	Channel 5	Channels 4 & 5 Channels 5 & 6 Channels 4 & 6	Poll Channels 4, 5 & 6
RL6	Channel 6	Channels 5 & 6 Channels 4 & 6 Channels 4 & 5	Poll Channels 4, 5 & 6

See 7.1 for location of the solder jumps to invoke these options. Voting logic is effected by making all of the channel pairings for the given relay.

2.3 Sensitivity

Each probe channel of the LT-310 can be set to one of three sensitivity ranges:

>4 mS/cm²
>2 mS/cm²
>1 mS/cm²

These values are effectively halved by using a shrouded probe. This increases the surface area of the system common and places the common much closer to the probe sensing element. Sensitivity is rarely an issue, and it is suggested that the mid-range setting be used initially to evaluate system performance in the actual application.

2.4 Test Switches

The LT-310 is supplied with two test switches, that simulate an all Wet or all Dry state. There is an On/Of slide switch that activates the Red/Green test switches and prevents the corresponding relays from going into alarm state during a simulation. When the slide switch is in the “On” position, System Fault will be indicated as a reminder that the LT-310 is in the simulation mode.

2.5 System Fault

System Fault is indicated by a flashing yellow LED labeled “SF” on the indicator and the activation of RL7.
There are three triggers for System Fault:

1. A failed power supply. If one of the switching power supplies fails, the remaining switching power supply will power the unit until the fault is corrected.
2. The On/Off slide switch that enables the Red/Green test switches is in the “On” position.
3. When the invoked via solder jumps on the discriminator PCB: out of sequence logic (i.e. Water over Steam). This is only valid where the probes are installed in a vertical progression respective of water level.

A failed probe insulator will typically cause the probe to be grounded, regardless of whether it is normally Wet or Dry. Hence, a dry probe with a failed insulator will indicate as Wet. If this occurs with a probe that has a functioning Dry probe below it, the out of sequence logic will declare a System Fault.

Probe cable monitoring is achieved by verifying continuity between two wires to probes that are expected to be normally Dry. A break in continuity between these two wires will simulate a Wet probe, and cause a System Fault. For the single wire connection to the normally Wet probes, an open-circuit connection will indicate Dry, activating the out of sequence Fault Detection circuit.

2.6 Process Fault

Process Fault is indicated by a flashing yellow LED labeled “PF” on the indicator, and is invoked by any channel that is not in its normal state, wet or dry.

3.0 Installation and Cabling

3.1 Enclosure

The LT-310 Electronic Unit enclosure is usually located adjacent to the probe manifold. The LT-310 enclosure should be located to provide clear routing of cables, minimum risk of damage from surrounding plant or activities and adequate visibility of the display. The standard enclosure is a Stahlin Diamond Shield, Model DS100806HPL, supplied with mounting foot kit. The instructions for mounting this enclosure are provided as Appendix A of this manual.

3.2 Main Power Supply

Line, Neutral and Earth Ground are connected directly to the switching power supplies located in the base of the enclosure. The power requirements are: 100 to 240 VAC ± 10% @ 15VA, 48 - 63 Hz. If two power sources are not available, install a wire jump to connect the switching power supplies.

3.3 Wiring Control Unit-to-Probes

It is recommended that a continuous length of high temperature cable be used to cover the span from the probes to the LT-310 control unit. Quest-Tec Solutions has a custom fabricated cable, available as an option, in 8, 12, 16 and 25 conductor versions. (The specification for 16 conductor cable is attached as Appendix B to this manual.) 20 AWG, nickel plated copper conductors should be used where elevated temperatures are expected. A maximum run of no more than 100 feet is recommended. Two conductors are required for each normally Dry probe, one conductor for each normally Wet probe, and two conductors for system Common.

Figure 3.3.1 shows the terminals provided for wiring the probes. Four terminals are supplied for each probe. Terminals 1 and 2 are for the probes, terminals 3 and 4 are for the Common Ground. To the right of each terminal block are two sets of solder pad jumps. The “A” jumps tie the two probe wires together, and should be jumped for all probes that are expected to be wet in the normal state. When “A” is jumped, a single wire can be used for the probe, either terminal 1 or 2.

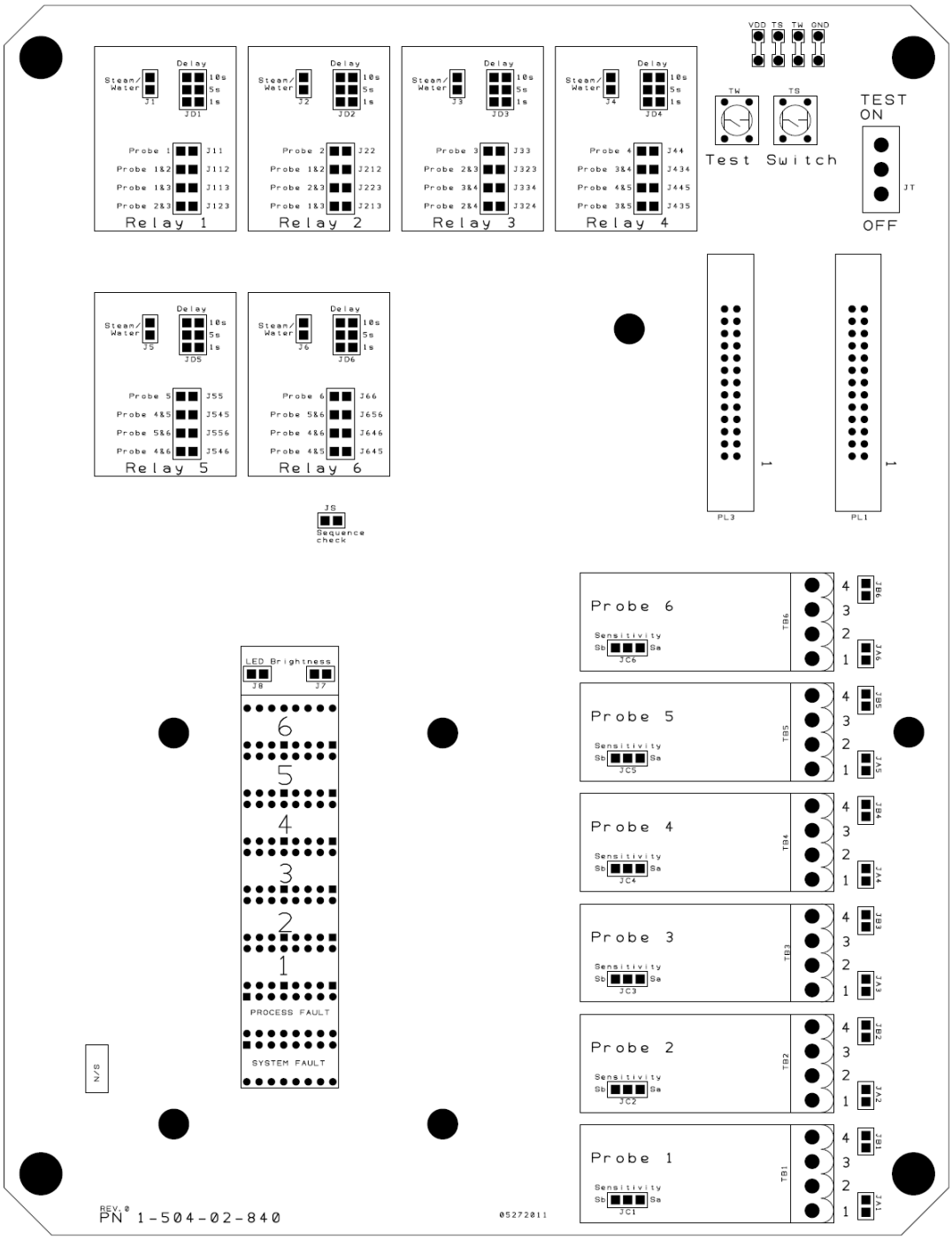

Figure 3.3.1

The Common Ground terminals (3 and 4) are common across the entire system, meaning that the common connection for any probe will work for any probe. Each probe holding device should have at least one common ground connection at minimum. The “B” jump invokes a continuity check of the probe wire, if required. (Units from the factory will normally have this jump made.)

For unused channels, making the “A” solder jump will cause the display to indicate a Dry state.

3.4 Wiring Alarm/Trip Relays

Figure 3.4 shows the connection point for relays and remote indicator. Each terminal block is supplied with a Phoenix Series MSTB plug.

There is an LED located at each relay to indicate the current status of the relay. When illuminated, the corresponding relay is energized. The relays are rated 8A at 250 VAC. *Note: If the continuous load is anticipated to be greater than 5A at 250 VAC, the board traces must be replaced with wire. This is a factory modification.*

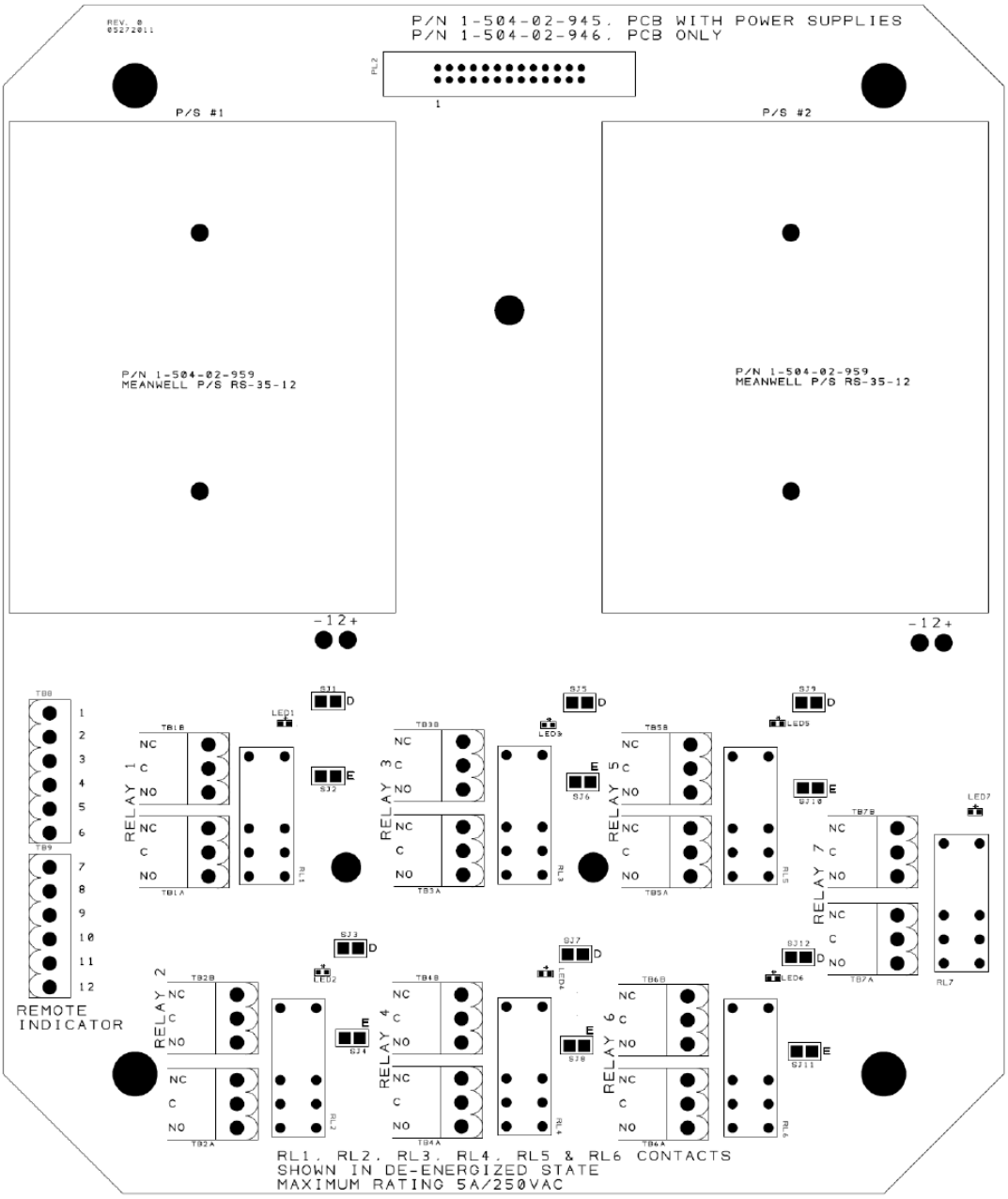

Figure 3.4.1

3.5 Panel Mount Remote Level Indicator

The Model LT-310 Control Unit can power up to two remotely mounted displays. The Model LTI-310 is designed to be mounted on a panel, with a cut-out size of 4.2" H X 2-5/8" W (107 mm H x 67 mm W). The quantity of conductors required is calculated by taking the number of channels used and adding 6. See Figure 3.4 for the location of terminal blocks TB8 and TB9. Terminal functions of the LT-310 Control Unit are as follows:

1 thru 6: Channel Drivers
7: Process Fault (Yellow) Driver
8: System Fault (Yellow LED) Driver
9: Ground
10: +12 VDC
11: Ground
12: +12 VDC

These correspond directly with the numbered terminals on the LTI-310. The remote display will operate with a single Ground and +12 VDC, the second pair is redundant.

4.0 Commissioning

4.1 Prior to initially powering up, verify that the ribbon cable connecting the two PCBs is oriented correctly and fully seated. The red conductor must be towards the "1" marked on the PCB.

4.2 Before installing the wired plugs for the probes, remote indicators, 4-20 mA output and relays, power up the unit, slide the test enabler switch to the "ON" position, depress and hold the green test switch and check that all green LEDs are illuminated. Release the green test switch, then depress and hold the red test switch and check that all red LEDs are illuminated. Slide the test enabler switch to the "OFF" position

4.3 Turn off the power, and install the wired probe plugs. Power up the unit, and observe. If the column is empty all probe channels should have the red LEDs illuminated. Short each probe in turn by touching a wire between the knurled nuts and probe body, checking that the corresponding green LED becomes illuminated.

4.4 Turn off the power and install the wired remote display plugs, if used. *To prevent permanent damage to the discriminator PCB, confirm that the wiring to the indicator is correct before powering up*. Power up the unit and check correct illumination of LED's by operation of the green and red test buttons.

4.5 Verify that the RL1 thru RL6 relays are receiving power as intended by observing the LED associated with each relay. When an LED is illuminated the associated relay has power and should be energized. If the "E" solder jump is made the relay LED will be illuminated when in normal state and will turn off when in the alarm or trip state. This is reversed when the "D" solder jump is made. (The relay LED Is powered by the current that activated the relay. It will verify that the relay has power, but does not verify that the relay has actually closed. Continuity must be checked at the terminals to verify that the relay is performing properly.)

When configuring the wiring for relays, note that the PCB labels "NC" and "NO" are based on the relays being in a de-energized (solder jump "D" mode).

5.0 Routine Maintenance

The LT-310 control unit requires no routine maintenance. However, it is recommended to periodically clean the external probe insulators with a small brush to keep free of accumulated dust, and to remove, clean and inspect the probes after one year's service.

6.0 LT-310 Control Unit Specifications

Enclosure:
Wall mounted glass-fiber reinforced polyester, IP65/NEMA4X protection for location in harsh environments.

Dimensions: 11.42” H X 9.79” W X 6.56” D (290 mm H X 249 mm W X 167 mm D)
Mounting Legs: (4) 0.50” X 0.31” (13 mm X 8 mm) Slots on 12.19” H X 6” W Centers (310 mm H X 152 mm W)

Inputs:
Discrimination between water and steam for up to 6 channels numbered in ascending order.

Sensitivity: Discrimination threshold may be selected for a minimum conductivity of 1 mS/cm², 2 mS/cm² or 4 mS/cm². (Use of a shrouded probe insert effectively reduces these values by half.)

Probe Normal State: This is set by solder jumps, making a jump for all probes anticipated to be in the wet state as normal. Probes that are normally wet require a single wire, probes that are normally dry require two wires.

Display:
Two vertical columns having 0.4” (10 mm) square LED’s on the front of the enclosure. One row of Green LED's represents water and another row of Red LED’s represents steam. A Yellow flashing LEDs signal a System or Process Fault Condition.

Supply Requirements:
100 to 240 VAC ± 10%, 48 - 63 Hz

Utility Consumption:
20 Watts

Temperature Rating:
Operating: -13º F (-25º C) to 158º F (70º C), Storage: -58º F (-50º C) to 212º F (100º C)

Relay Outputs:

Alarms/Trips: RL1 through RL6 can be set to activate on the input of one probe channel, or any of three parings. Enabling all three parings results in a voting logic circuit that polls three probes, activating in a 2 of 3 scenario.

Fault Alarm: One relay (RL7) is dedicated to activate when a Fault is indicated.

Alarm and Trip Relays may be set to a direct (de-energized) or inverse (energized) normal state The Fault relay is set to an inverse (energized) normal state.

Relay Ratings:
DPDT, Max. Current: 8 Amps @ 250VAC

Remote Display:
Twelve terminals are provided for direct connection to a Remote Display Unit. The Remote Display Unit option LTI-310 duplicates the display on the front of the main unit and is intended for control room location.

Panel Mounted, 7.75” H X 3” W (197 mm H x 76 mm W), Panel cut-out: 4.2” H X 2.625” W (107 mm H x 67 mm W)

7 Field Programming

7.1 Discriminator PCB

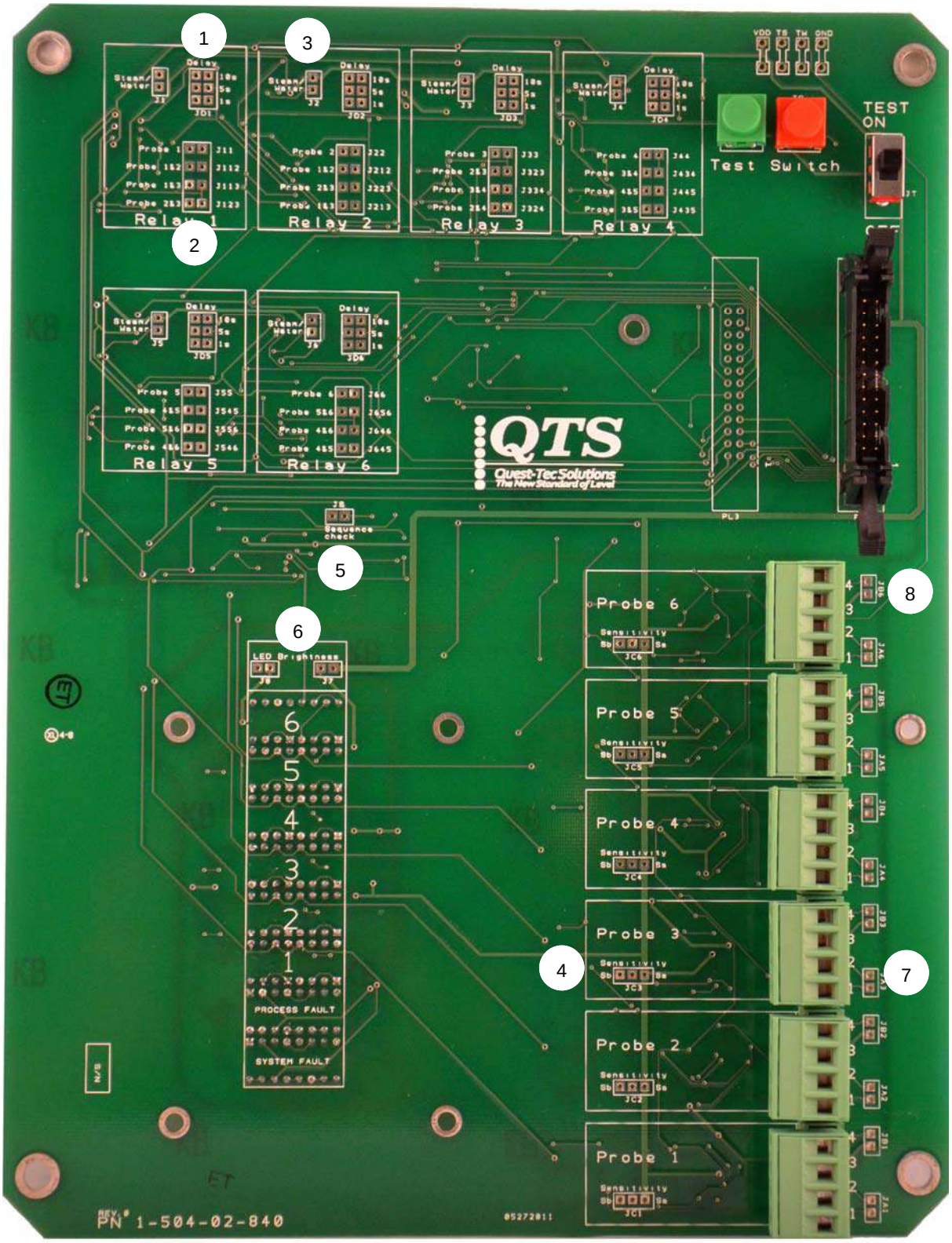

1) Time Delay (6 Places): No Jump = 15 seconds (See Part 2.2)
2) Alarm/Trip Relays (6 Places): Assigns relay activation conditions. (See Part 2.2.1)
3) Alarm/Trip State (6 Places): Assigns alarm state, wet or dry. (Make jump if Alarm state is Dry. See Part 2.1)
4) Sensitivity (6 Places): No Jump >4μ S/cm², Sa to Center is >2μ S/cm², Sb to Center is >1μ S/cm² (See Part 2.3)
5) Sequence Check: Invokes sequence logic.
6) LED Brightness (2 Places): Doubles voltage to indicator to make it brighter (See Part 2.5)
7) Probe Assignment (6 Places): Jump "A" to set probe to normally Wet state. (See Part 3.3 and Figure 3.4.1)
8) Common Ground (6 Places): Jump "B" should be made unless a Common Ground continuity check is desired.

7.2 Power Supply/Relays PCB

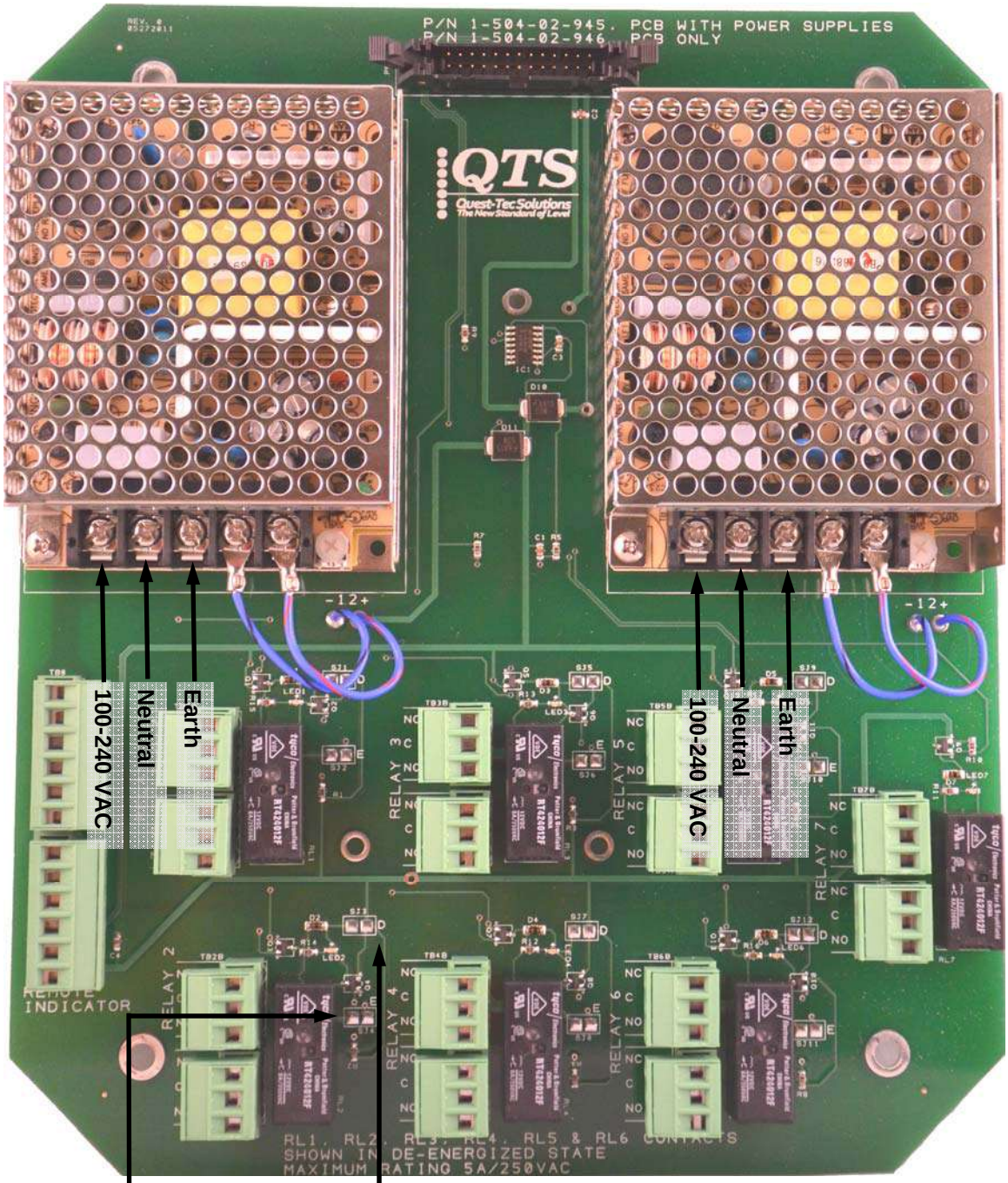

Normal Relay State
E = Inverse (Energized)
D = Direct (De-energized)

Installing and Removing Covers
To remove cover:
1) Open the enclosure completely and provide adequate support to keep the cover from being damaged during disassembly.

2) Using a hammer and screwdriver, gently tap on the end of the hinge pin nearest the middle of the enclosure (closed end) so that the pin becomes unseated at the other end (approx. 1/4")

3) Using pliers, grasp the opposite end (flattened) of the hinge pin and pull completely out. Repeat steps 1 and 2 to remove the second hinge pin.

To install new cover
4) Assemble hinge pins to the cover by inserting the round end of the pin into the hinge core in the cover. You may need to use a hammer to gently tap the pin into place. Repeat this for the second pin.

5) Align the cover with the base in the open position.

6) Using a small hammer, gently tap the hinge pin into the corresponding hole in the base until the end of the pin is fully seated and flush with the cover surface. Repeat this step for the second hinge pin.

Changing out the latches
7) Remove existing latch by gently tapping the latch off the dovetail on the side of the enclosure.

8) Assemble the new latch by sliding the latch base onto the corresponding dovetail on the enclosure base **UNTIL COMPLETELY SEATED**. Repeat steps 7 & 8 for the other latches.

Adding Mounting Feet
9) Place mounting foot on the back side of enclosure so that the countersink hole is directly over the brass insert.

10) Using a screw driver and the #10-32 x 7/16" flat head screw, tighten the mounting foot to the enclosure. Torque to approximately 25 in-lbs. Repeat steps 9 and 10 for the remaining mounting feet.

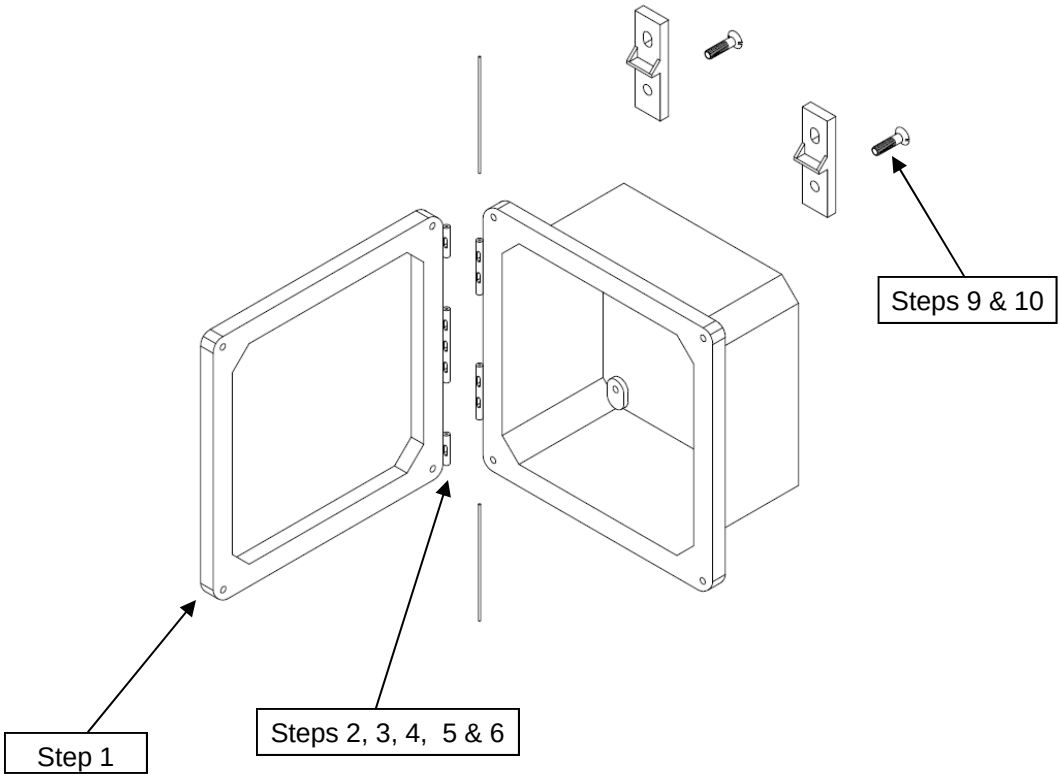

QTS Quest-Tec Solutions
The New Standard of Level

Glass-Trac | Steam-Trac | Level-Trac | Magne-Trac

Spec:	M22759-12-20-16C	Date:	July 16, 2009
By:		Approved:	

M22759/12-20 16 CONDUCTOR CABLE UNSHIELDED EXTRUDED WHITE PFA JACKET

PRIMARY WIRE TYPE	M22759/12-20-9
CONDUCTOR SIZE	20 19/32
CONDUCTOR MATERIAL	NICKEL PLATED COPPER
CONDUCTOR DIAMETER	.037" - .041"
PRIMARY INSULATION MATERIAL	PTFE
PRIMARY WIRE DIAMETER	.056" - .060"

CABLE CONSTRUCTION

NUMBER OF CONDUCTORS	16
COLOR CODE	9-96-93-954-92-90-94-97-98-91 901,902,903,904,905,906
JACKET MATERIAL	PFA
JACKET COLOR	WHITE
JACKET THICKNESS	.015" NOMINAL
CABLE FINISHED DIAMETER	.305" NOMINAL

PERFORMANCE CHARACTERISTICS

TEMPERATURE RATING	500° F / 260° C
VOLTAGE RATING	600 VOLTS

THERMOCOUPLE OPERATION AND INSTALLATION INSTRUCTIONS

Thermocouples are installed by means of compression fittings, welded 1/2" x 1/2" NPT fittings, or bayonet fittings.

Follow these instructions for installation of a thermocouple with a 1/2" x 1/2" NPT fitting:

(1) Insert thermocouple into process hole
(2) Tighten probe into place by turning probe into threaded connection.

When installing a spring-loaded sensor, the wires should be disconnected from the terminal block to prevent twisting and shorting during installation.

INSTALLATION:

Place thermocouple in area not too close to heating element or direct flame.

When measuring very high temperatures, install thermocouple vertically, if possible, to avoid protection tube element sagging.

Always use thermocouple extension wire to correlate with calibration of thermocouple and instrumentation being used.

Install thermocouple away from AC power lines, preferably more than one foot away.

Do not run thermocouple wires in the same conduit with other electrical wires.

Apply lacquer or silicon resin to screws to prevent effects of vibration and oxidation.

ELECTRICAL:

Make sure the extension wire is clean so a good electrical connection will result at the terminal block. Connect the positive extension wire to the positive thermocouple wire and the negative extension wire to the negative thermocouple wire. Wires are color coded for identification as follows, notice that the negative leg is always red.

	THERMOCOUPLE TYPE			EXTENSION WIRES		
	POS.	NEG.	OUTER JACKET	POS.	NEG*	OUTER JACKET
E	purple	red	brown	purple	red	purple
J	white	red	brown	white	red	black
K	yellow	red	brown	yellow	red	yellow
R	N/A	N/A	N/A	black	red	green
S	N/A	N/A	N/A	black	red	green
T	blue	red	brown	blue	red	blue
N	orange	red	brown	orange	red	orange

See Page 1-9 for IEC color codes for primary conductor and color codes. The outer jacket matches the primary conductor unless specified for an intrinsically safe area, in which case all outer jackets are blue.

*A tracer having the color corresponding to the positive extension may be used on the negative wire code. Occasionally, it is necessary to determine thermocouple polarity in the field. The above characteristics are helpful, along with the information on the following page.

4, one hour sessions training video.
$1200.00 - Call for information.

TYPE E-The negative wire has lower resistance in ohms per foot than the positive element for the same size wire.

TYPE J-The positive element is frequently rusty and is magnetic. It has a lower resistance in ohms per foot for the same size wire.

TYPE K-The negative element is slightly magnetic. It has a lower resistance in ohms per foot for the same size positive wire.

TYPE R or S-The negative wire is softer. The positive wire has a lower resistance in ohms per foot for the same size wire.

TYPE T-The negative wire is silver in appearance. The positive wire has a lower resistance in ohms per foot for the same size wire, and is usually copper colored.

TYPE N-The positive leg has a higher resistance in ohms per foot for the same size wire.

Note: When in doubt, twist the wire together, and connect opposite ends to a volt meter. Heat the twisted end with a cigarette lighter. If the volts go up - polarity is correct ...

OPERATION:

The temperature of the connection head should be kept as near room temperature as possible to avoid errors due to the extension wires. The maximum recommended temperature at the terminal block is 400°F.

MAINTENANCE:

The quality and frequency of calibration checks must be determined for each individual application by noting the decalibration rate of each thermocouple at individual installations. Thermocouples will deteriorate due to contamination from their environments. Calibration is usually made by comparison with a working standard. The thermocouple may be removed from its installation and checked in an electric furnace with the working standard; however, check the thermocouple in its installed position and location if possible. See page VI.

Return thermocouples that were removed for tests to the same location and immersion depth for reliable and repeatable readings.

Do not use a thermocouple to measure a very low temperature if it has been used to measure a very high temperature previously.

Make sure protection tubes and thermowells are in good condition when protecting thermocouples with them.

Do not run a single thermocouple to two different instruments. This can result in instrument imbalance. A dual isolated thermocouple should be used instead.

STORAGE:

Store in a clean dry place. Avoid stacking probes in areas of excessive moisture or humidity (ie: dripping, condensation). Special packing with desiccant can be specified. (See page II)

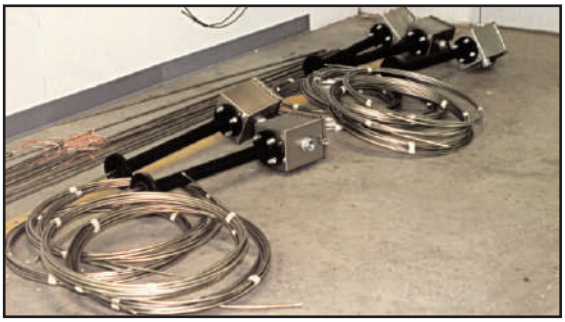

INSTALLATION AND MAINTENANCE INSTRUCTIONS FOR ASHCROFT® BIMETAL DIAL THERMOMETERS

ASHCROFT®

GENERAL

In removing the thermometer out of the packing box, handle it by the case or case outlet. Avoid handling it by the stem.

INSTALLATION OF THERMOMETERS

The thermometer should be mounted at any convenient location where it will be subjected to the average temperature variations to be indicated.

For an everyangle connection please refer to the reverse side of this document before beginning the installation.

Avoid bending the stem as this will cause misalignment of the internal parts, resulting in undue frictional errors.

To tighten the thermometer to the apparatus, use a wrench applied to the hexagon head of the threaded connection located just outside of the case.

INSTALLATION

Locate the stem so that at least two inches will be subjected to the average temperature to be measured.

Exposing the stem to a temperature in excess of the highest dial reading should be avoided.

The thermometer is normally provided with a threaded connection. To tighten the thermometer to the apparatus or into the well, use an open-end wrench applied to the hexagon head of the threaded connection.Turn until reasonably tight, then tighten still further in the same manner as a pipe elbow or similar pipe fitting until the scale is in the desired position for reading. DO NOT TIGHTEN BY TURNING THE THERMOMETER CASE. *Install the dry type thermometer so that the maximum case temperature is kept below 200°F at all times. Install the liquid filled type thermometer so that the maximum case temperature is kept below 150°F at all times.*

When a thermometer is equipped with a well, the well should be installed onto the apparatus first. The stem of the thermometer should then be coated with a heat conducting medium (a mixture of glycerin and graphite or vaseline or any other heavy lubricant may be used), after which the thermometer stem is inserted, and tightened into the well.

CAUTION:
Thermowells should be used on all pressurized applications, to protect the thermometer from corrosion or physical damage, and to facilitate removal of the thermometer without disturbing the process.

TESTING

Ashcroft Bimetal Dial Thermometers are carefully calibrated at the factory and under most operating conditions will retain their accuracy indefinitely. However, as in the case of all instruments, it is well to make periodic checks for accuracy against known standards.

ADJUSTMENT

If it is necessary to make an adjustment to the thermometer proceed as follows:

On thermometers fitted with an "External Adjustment" – Use a small wrench, small screwdriver or a coin to turn the slotted hexagon head in the back of the case until the pointer indicates the proper temperature on the dial.

MAINTENANCE OF DIAL THERMOMETERS

Aside from occasional testing, little or no maintenance is required.

Be sure that the gasketed glass cover is on the case at all times, as moisture and dirt inside the case will eventually cause the thermometer to lose its accuracy. (See caution note below.)

If the thermometer is used for measuring the temperature of a material that may harden and build up an insulating layer on the stem, the thermometer should be removed from the apparatus occasionally, and the stem cleaned. Observe this precaution to ensure the sensitivity of the instrument.

CAUTION:
Bimetal Thermometers operating below freezing must have a perfectly tight case to prevent entrance of moisture which eventually will condense and freeze inside the stem. This condition shows up as a failure of the thermometer to read accurately below 32°F or 0°C. For this reason it is important to avoid damage to the glass front while the stem temperature is at freezing or below. All thermometers are hermetically sealed in a dry atmosphere at the factory and require no further maintenance.

VOGT POWER INTERNATIONAL	
Released, Work May Proceed	
Hugle, Kathy	Sep-29-2011

VOGT POWER INTERNATIONAL
V17460-ICXE-521-00
27-Sep-2011

© 2011 Ashcroft Inc., 250 East. Main Street, Stratford, CT 06614-5145, USA Tel: 203-378-8281, Fax: 203-385-0499, www.ashcroft.com
All sales subject to standard terms and conditions of sale. I&M008-10187 Rev 05/11

Installation and Maintenance Instructions for ASHCROFT® Bimetal Thermometer with EVERYANGLE™ Conn.

ASHCROFT®

This thermometer was designed to be positioned to face the direction of easiest reading.

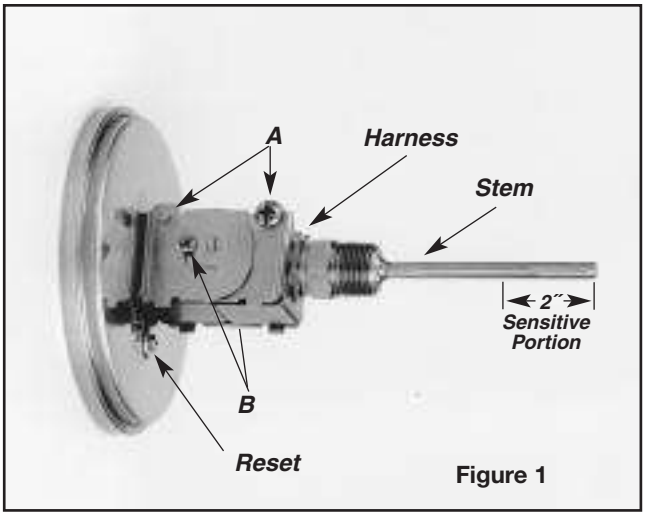

Figure 1

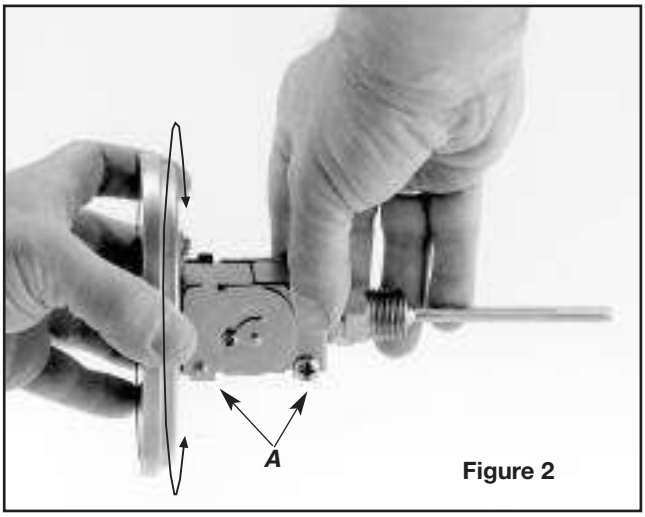

Figure 2

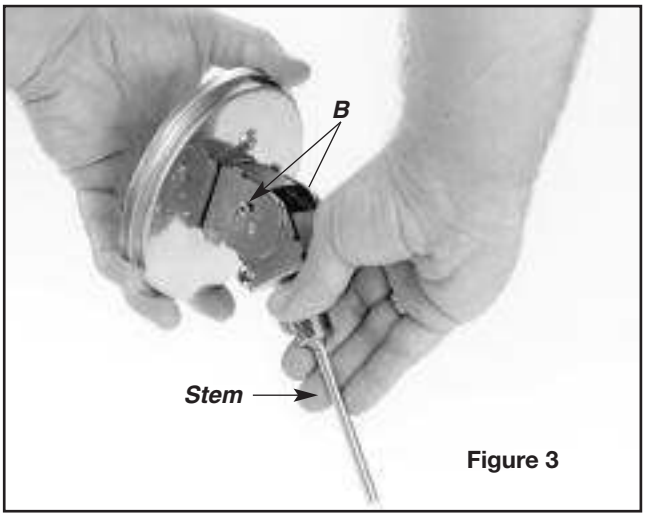

Figure 3

CAUTION: *To assure longest life, the "EVERY-ANGLE" joint should be operated only when necessary during installation or removal of the thermometer.*

POSITIONING THE STEM

Before installation, the stem should be set to the desired angle as follows:

Figure 1: Loosen the four screws labeled "A" and "B" in Figure 1, until the harness revolves freely without twisting the flexible housing.

Figure 2: While holding the case, revolve the harness clockwise or counterclockwise, as indicated by arrows in Figure 2, to place the harness in a position that will permit flexing the stem in the desired direction with respect to the case. Then lock the two screws labeled "A."

Figure 3: Flex the stem to the desired angle with respect to the face of the thermometer, as shown in Figure 3, then lock the two screws labeled "B."

INSTALLATION

The lower 2″ of the stem is the sensitive portion. Be sure this part of the stem is exposed to the temperature to be measured.

Tighten the thermometer to the apparatus or into the thermometer well, using an open-end wrench applied to the hexagon head of the connection bushing. Turn until reasonably tight, then tighten further (in the same manner as a pipe fitting) until the scale is in the desired position for reading.

DO NOT TIGHTEN BY TURNING THE THERMOMETER CASE OR THE HARNESS. INSTALL THE DRY TYPE EVERYANGLE THERMOMETER SO THAT THE MAXIMUM CASE TEMPERATURE IS KEPT BELOW 200°F. INSTALL THE LIQUID-FILLED TYPE EVERYANGLE THERMOMETER, SO THAT THE MAXIMUM CASE TEMPERATURE IS KEPT BELOW 150°F.

THERMOMETER WELLS

When the thermometer is equipped with a well, the well should first be removed from the thermometer and screwed into the apparatus.

© 2011 Ashcroft Inc., 250 East. Main Street, Stratford, CT 06614-5145, USA Tel: 203-378-8281, Fax: 203-385-0499, www.ashcroft.com
All sales subject to standard terms and conditions of sale. I&M008-10187 Rev 05/11

DURATEMP® GAS ACTUATED THERMOMETERS, INSTALLATION AND USE INFORMATION

ASHCROFT®

INSTALLATION OF REMOTE READING THERMOMETERS

The case of the thermometer should be mounted at a location where it can be read conveniently. The maximum case temperature should not exceed 160°F (70°C). The capillary line also should be laid so that it will not be exposed to extreme temperatures, such as alongside steam pipes, ovens or other heated surfaces.

The minimum capillary line radius is 1″. Place it so that it will be protected from damage. Should the capillary line be too long, coil the surplus neatly at a convenient point but **"DO NOT CUT IT."**

The thermometer system (Bourdon spring, capillary line and temperature sensing bulb) must not, under any circumstances be taken apart, or the capillary line cut.

INSTALLATION OF TEMPERATURE SENSING BULB IN THERMOWELL— (note: a 3/8″ bore thermowell is required— adapters are available to permit installation in larger bore thermowells.)

1. Install thermowell.
2. Assemble union connection to temperature sensing bulb finger tight.
3. Apply heat conducting medium to temperature sensing bulb of thermometer (50/50 mix of glycerin and graphite, or Vaseline.)
4. Insert temperature sensing bulb into thermowell and hold against bottom of thermowell.
5. Assemble union connection to thermowell.
6. Tighten jam nut to union to lock temperature sensing bulb in position, normal tightening is 3/4 to 1 turn from finger tight.

Where service temperatures exceed 350°F (177°C) the heat conducting medium may smoke when first subjected to a high temperature. This is caused by the vehicle, in the heat conducting medium, vaporizing and leaving the dry solids behind. This should not be cause for alarm. The dry solids will act equally well as a heat conducting medium for temperatures up to 1200°F (650°C).

TESTING

Every ASHCROFT DURATEMP thermometer is carefully calibrated at the factory and under normal operating conditions it will remain accurate. If it is necessary to test the thermometer the following procedure should be used:

Immerse the entire sensitive part of the temperature sensing bulb side by side with a test thermometer of known accuracy in a liquid bath which is being stirred vigorously and in which the temperature is maintained constant for several minutes before readings are taken.

Never attempt to test thermometers in air. Air is a poor conductor of heat and there is always the danger of cold currents influencing the thermometer reading.

TO CHANGE THE INDICATED TEMPERATURE READING

1. Remove the window.
2. Hold the hub of the pointer stationary. Use a slotted screwdriver for 4 1/2″ and 8 1/2″ cases, grasp the knurl of the 6″ pointer hub.
3. Hold pointer in other hand between thumb and forefinger so that torque can be applied to move pointer.
4. Establish reference temperature and rotate pointer required amount for most accurate reading.
5. Replace the window.

INSTALLATION OF DIRECT READING THERMOMETERS

POSITIONING THE SYSTEM

Before installation, the stem should be set to the desired angle as follows:

1. Loosen the four screws labeled "A" and "B" in Figure until the harness revolves freely without twisting the flexible housing.
2. While holding the case, revolve the harness clockwise or counterclockwise as indicated by the arrows in Figure to place the harness in a position that will permit flexing the stem in the desired direction with respect to the case, then lock the two screws labeled "A."
3. Flex the stem to the desired angle with respect to the face of the thermometer as shown in Figure, then lock the screws labeled "B."

INSTALLATION

1. The thermometer is normally provided with a threaded connection. To tighten the thermometer to the apparatus or into a thermowell, use an open end wrench applied to the hexagon head of the threaded connection. Turn until reasonably tight, then tighten still further in the same manner as a pipe fitting until the scale is in the desired position for reading. **"DO NOT TIGHTEN BY TURNING THE THERMOMETER CASE."**
2. Insert the thermometer into the threaded connection and turn the compression nut until reasonably tight, then tighten still further in the same manner as a pipe fitting.

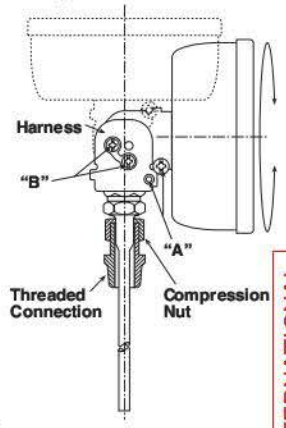

ASHCROFT INC.
250 EAST MAIN ST.
STRATFORD, CT 06614-5145
TEL: 203-378-8281 • FAX: 203-385-0408
EMAIL: INFO@ASHCROFT.COM

www.ashcroft.com
I&M008-10067-2/01(250-2199R3) 4/06
© Ashcroft Inc. All sales subject to standard terms and conditions of sale. Printed in U.S.A.

VOGT POWER INTERNATIONAL
V17460-ICXE-522-00
27-Sep-2011

VOGT POWER INTERNATIONAL
Released, Work May Proceed
Hugle, Kathy
Sep-29-2011

TERMOMETROS DURATEMP® ACCIONADOS POR GAS, INFORMACION SOBRE SU INSTALACION Y USO

ASHCROFT®

INSTALACION DE TERMOMETROS DE LECTURA REMOTA

La caja del termómetro debe instalarse en un lugar donde pueda leerse convenientemente. La máxima temperatura de la caja no debe exceder de 70°C (160°F). La línea capilar también debe ser tendida de modo que no quede expuesta a temperaturas extremas, como sucedería si se colocara a lo largo de tuberías de vapor, hornos u otras superficies calentadas.

El radio mínimo de la línea capilar es de 25,4 mm (1 pulgada). Colóquese de modo que quede protegida contra daños. Si la línea capilar fuera demasiado larga, enrolle el material sobrante ordenadamente en un punto conveniente pero **"NO LO CORTE"**.

El sistema del termómetro (el bulbo sensor de temperatura, la línea capilar y el resorte de Bourdon) no debe desarmarse, ni la línea capilar debe cortarse, en ningunas circunstancias.

INSTALACION DEL BULBO SENSOR DE TEMPERATURA EN UNA TERMOVAINA — (nota: se requiere una termovaina con un diámetro interior de 9,5 mm (3/8´) —hay adaptadores que permiten la instalación en termovainas de mayor calibre interno).

1. Instale la termovaina.
2. Ensamble la conexión de la unión con el bulbo sensor de temperatura apretándola con los dedos.
3. Aplique un medio conductor de calor al bulbo sensor de temperatura del termómetro (una mezcla 50/50 de glicerina y grafito, o vaselina).
4. Introduzca el bulbo sensor de temperatura en la termovaina y sosténgalo contra la parte inferior del mismo.
5. Ensamble la conexión de la unión a la termovaina.
6. Apriete la tuerca de sujeción contra la unión para asegurar el bulbo sensor de temperatura en su lugar; el apretamiento normal es de 3/4 a 1 vuelta a partir del lugar donde quede apretado con los dedos.

Donde las temperaturas de servicio sean superiores a los 177°C (350°F) el medio conductor de calor podría despedir humo cuando sea expuesto por primera vez a una alta temperatura. Esto es causado por el vehículo, contenido en el medio conductor de calor, al evaporarse y dejando atrás los sólidos secos. Esto no debe ser causa de alarma. Los sólidos secos actuarán igualmente bien como medio conductor de calor para temperaturas de hasta 650°C (1200°F).

PRUEBAS

Cada termómetro ASHCROFT DURATEMP es calibrado cuidadosamente en la fábrica y en condiciones normales de trabajo seguirá siendo exacto. Si fuera necesario probar el termómetro, debe emplearse el siguiente procedimiento:

Sumerja toda la parte sensible del bulbo sensor de temperatura junto con un termómetro de prueba de exactitud conocida en un baño líquido que esté siendo agitado vigorosamente y en donde la temperatura se mantenga constante durante varios minutos antes de tomar las lecturas.

Nunca debe intentarse probar termómetros en el aire. El aire es un mal conductor del calor y siempre existe el peligro de que las corrientes frías afecten la lectura del termómetro.

PARA MODIFICAR LA LECTURA INDICADA DE TEMPERATURA

1. Saque el visor.
2. Sostenga fijo el cubo central de la aguja indicadora. Utilice un destornillador para cabezas ranuradas para las cajas de 114 mm (4½´) 216 mm y (8½´); agarre la parte moleteada del cubo central de la aguja indicadora de 150 mm (6´).
3. Sostenga la aguja indicadora en la otra mano entre el pulgar y el índice de modo que pueda aplicarse fuerza de torsión para mover la aguja indicadora.
4. Establezca la temperatura de referencia y gire la aguja indicadora la cantidad requerida para obtener la lectura más exacta posible.
5. Vuelva a colocar el visor en su lugar.

INSTALACION DE TERMOMETROS DE LECTURA DIRECTA

POSICIONAMIENTO DEL SISTEMA

Antes de la instalación, el vástago debe colocarse en el ángulo deseado de la siguiente manera:

1. Afloje los seis tornillos rotulados "A" y "B" en la Figura hasta que el arnés gire libremente sin torcer el cascarón flexible.
2. Mientras sostiene la caja, gire el arnés en la misma dirección de las manecillas del reloj o en dirección contraria a las manecillas del reloj según lo indican las flechas en la Figura para colocar el arnés en una posición que permita flexionar el vástago en la dirección deseada respecto a la caja; luego, asegure los dos tornillos rotulados "A".
3. Flexione el vástago al ángulo deseado respecto a la carátula del termómetro como se indica en la Figura; luego, asegure los tornillos rotulados "B".

INSTALACION

1. El termómetro normalmente se proporciona con una conexión roscada. Para apretar el termómetro en el aparato o dentro de una termovaina, utilice una llave de boca aplicada a la cabeza hexagonal de la conexión roscada. Gire la conexión hasta que esté razonablemente apretada; luego, apriétela todavía más de la misma manera que una conexión de tubería hasta que la escala se encuentre en la posición deseada para lectura. **"NO APRETAR HACIENDO GIRAR LA CAJA DEL TERMOMETRO"**.
2. Introduzca el termómetro en la conexión roscada y gire la tuerca de compresión hasta que esté razonablemente apretada; luego, apriete todavía más en la misma manera que una conexión de tubería.

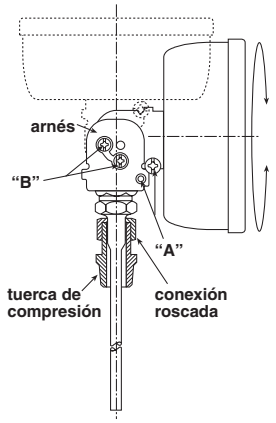

ASHCROFT INC.
250 EAST MAIN ST.
STRATFORD, CT 06614-5145
TEL: 203-378-8281 • FAX: 203-385-0408
EMAIL: INFO@ASHCROFT.COM

www.ashcroft.com
I&M008-10067-2/01(250-2199R3) 4/06
© Ashcroft Inc. All sales subject to standard terms and conditions of sale. Printed in U.S.A.

THERMOMÈTRES À GAZ DURATEMP®, CONSIGNES D'INSTALLATION ET D'UTILISATION

ASHCROFT®

INSTALLATION DES THERMOMÈTRES À LECTURE À DISTANCE

Le boîtier du thermomètre doit être monté là où il peut être lu commodément. La température maximum du boîtier ne doit pas dépasser 70°C (160°F). En outre, la ligne capillaire doit être disposée de manière à ce qu'elle ne soit pas exposée aux températures extrêmes, comme le long des tuyaux de vapeur, des fours ou autres surfaces chauffées.

Le rayon minimal de la ligne capillaire est de 25,4 mm (1 po). Elle doit être placée de manière à être protégée contre les dommages. Si la ligne capillaire est trop longue, enrouler le surplus proprement à un point commode mais « **NE PAS LA COUPER ».**

Le système de thermomètre (ressort de Bourdon, ligne capillaire et bulbe de détection de température) ne doit, en aucune circonstance, être démonté, ni la ligne capillaire coupée.

INSTALLATION DU BULBE DE DÉTECTION DE TEMPÉRATURE DANS UN PUITS THERMOMÉTRIQUE — (remarque : un puits thermométrique à calibre de 9,5mm (3/8 po) est requis — des adaptateurs sont disponibles pour permettre l'installation dans les puits thermométrique de plus gros calibre.)

1. Installer le puits thermométrique.
2. Monter le raccord sur le bulbe de détection de température en serrant à la main.
3. Appliquer le milieu thermoconducteur au bulbe de détection de température du thermomètre (mélange 50/50 de glycérine et de graphite, ou de Vaseline).
4. Insérer le bulbe de détection de température dans le puits thermométrique et tenir contre le fond du puits thermométrique.
5. Monter le raccord au puits thermométrique.
6. Serrer le contre-écrou au raccord de manière à bloquer le bulbe de détection de température en place, un serrage normal est de 3/4 à 1 tour depuis le serrage à la main.

Lorsque les températures de service dépassent 177°C (350°F), il se peut que le milieu thermoconducteur dégage de la fumée lorsqu'il est soumis pour la première fois à une température élevée. Ce dégagement de fumée est causé par le véhicule, dans le milieu thermoconducteur, qui vaporise et laisse les solides secs derrière. Il n'y a pas lieu de s'inquiéter. Les solides secs seront tout aussi efficaces comme milieu thermoconducteur pour les températures allant jusqu'à 650°C (1200°F).

ESSAIS

Chaque thermomètre ASHCROFT DURATEMP est étalonné avec soin à l'usine et il demeurera exact dans des conditions normales de service. S'il est nécessaire de faire l'essai du thermomètre, procéder de la façon suivante :

Immerger toute la partie sensible du bulbe de détection de température à côté d'un thermomètre d'essai d'une exactitude connue dans un bain liquide qui est remué énergiquement et dans lequel la température est maintenue constante pendant quelques minutes avant que des relevés ne soient effectués.

Ne jamais tenter de faire l'essai de thermomètres dans l'air. L'air est un mauvais conducteur de chaleur et il y a toujours le risque que des courants froids n'influent sur le relevé du thermomètre.

POUR MODIFIER LE RELEVÉ DE TEMPÉRATURE INDIQUÉ

1. Enlever la fenêtre.
2. Tenir le moyeu de l'aiguille fixe. Utiliser un tournevis pour écrous à fente sur les boîtiers de 114 mm (4½ po) et de 216 mm (8½ po), saisir la molette du moyeu de l'aiguille de 150 mm (6 po).
3. Tenir l'aiguille de l'autre main entre le pouce et l'index de manière à pouvoir appliquer un couple pour déplacer l'aiguille.
4. Établir la température de référence et tourner l'aiguille du niveau nécessaire en vue du relevé le plus exact.
5. Remettre la fenêtre en place.

INSTALLATION DES THERMOMÈTRES À LECTURE DIRECTE

POSITIONNEMENT DU SYSTÈME

Avant l'installation, la tige doit être placée à l'angle désiré, comme suit :

1. Desserrer les six vis marquées « A » et « B » dans la Figure jusqu'à ce que le harnais tourne librement sans tordre le boîtier flexible.
2. Tout en tenant le boîtier, faire tourner le harnais en sens horaire ou anti-horaire, comme indiqué par les flèches de la Figure, en vue de placer le harnais à une position qui permettra le fléchissement de la tige dans la direction désirée par rapport au boîtier, puis bloquer les deux vis marquées « A ».
3. Fléchir la tige à l'angle désiré par rapport au devant du thermomètre comme illustré dans la Figure, puis bloquer les vis marquées « B ».

INSTALLATION

1. Le thermomètre est fourni normalement avec un raccord fileté. Pour serrer le thermomètre à l'appareil ou dans un puits thermométrique, utiliser une clé à molette appliquée sur la tête hexagonale du raccord fileté. Tourner jusqu'à ce que raisonnablement serré, puis serrer encore davantage de la même manière qu'un raccord de tuyau jusqu'à ce que l'échelle soit à la position désirée pour la lecture. « **NE PAS SERRER EN TOURNANT LE BOÎTIER DU THERMOMÈTRE.** »
2. Insérer le thermomètre dans le raccord fileté et tourner l'écrou de compression jusqu'à ce qu'il soit raisonnablement serré, puis serrer davantage de la même manière qu'un raccord de tuyau.

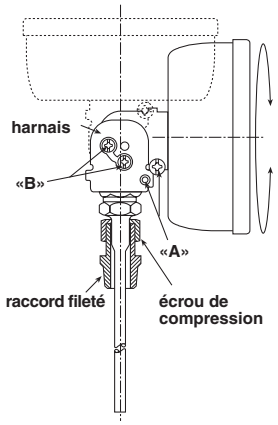

ASHCROFT INC.
250 EAST MAIN ST.
STRATFORD, CT 06614-5145
TEL: 203-378-8281 • FAX: 203-385-0408
EMAIL: INFO@ASHCROFT.COM

www.ashcroft.com
I&M008-10067-2/01(250-2199R3) 4/06
© Ashcroft Inc. All sales subject to standard terms and conditions of sale. Printed in U.S.A.

DURATEMP®
GASTHERMOMETER
EINBAU- UND GEBRAUCHSANWEISUNG

ASHCROFT®

EINBAU VON THERMOMETERN MIT ABGESETZTER MESSWERTANZEIGE

Das Thermometergehäuse sollte an einer Stelle montiert werden, an der das Instrument problemlos abgelesen werden kann. Die Gehäusetemperatur sollte nicht mehr als 70 °C (160 °F) betragen. Auch die kapillare Meßleitung sollte so verlegt werden, daß sie keinen extremen Temperaturen ausgesetzt ist; Dampfrohre, Öfen und andere Wärme abstrahlende Flächen sind zu meiden.

Der minimale Platzbedarf der kapillaren Meßleitung beträgt 25,4 mm (1´) im Radius. Die Meßleitung muß so verlegt werden, daß sie nicht beschädigt werden kann. Sollte die Meßleitung zu lang sein, kann die Überlänge an einer geeigneten Stelle spiralförmig aufgerollt werden, darf aber **NICHT DURCHGESCHNITTEN WERDEN!**

Unter keinen Umständen darf das Thermometersystem (Bourdonfeder, Meßleitung und Meßfühler) auseinandergenommen oder die Leitung durchschnitten werden.

INSTALLIEREN DES MESSFÜHLERS IM THERMOMETERSCHACHT (Bitte beachten: Die Bohrung des Thermometerschachts muß mindestens 9,5 mm (3/8´) betragen. Für eine Installation in größeren Thermometerschächten kann ein Adapter bezogen werden.)

1. Thermometerschacht installieren.
2. Das Anschlußstück am Meßfühler anbringen und von Hand festziehen.
3. Eine wärmeleitende Masse (Mischung aus Glyzerin und Graphit zu gleichen Teilen oder Vaseline) auf den Meßfühler auftragen.
4. Den Meßfühler in den Schacht einführen und gegen den Boden des Schachts halten.
5. Die Anschlußeinheit am Thermometerschacht anbringen.
6. Den Meßfühler durch Anziehen der Kontermutter arretieren. Das normale Drehmoment entspricht etwa 3/4 bis 1 Umdrehung, nachdem das Anschlußstück von Hand angezogen wurde.

Sollte die Betriebstemperatur bei der ersten Wärmeeinwirkung 177 °C (350 °F) übersteigen, kann die wärmeleitende Masse Rauch entwickeln. Dieser Rauch entsteht durch das Verdampfen der Trägersubstanz der wärmeleitenden Masse, die nur die festen Bestandteile zurückläßt. Dies ist jedoch kein Anlaß zur Besorgnis. Die festen Rückstände bilden ebenfalls einen guten Wärmeleiter für Temperaturen bis 650 °C (1200 °F).

TESTEN

Jedes ASHCROFT DURATEMP-Thermometer wurde im Werk sorgsam kalibriert und funktioniert unter normalen Arbeitsbedingungen einwandfrei. Sollte sich ein Thermometertest als erforderlich erweisen, empfiehlt sich folgendes Verfahren:

Den gesamten Fühlerteil des Thermometers und ein Thermometer mit bekannter Genauigkeit nebeneinander in eine Flüssigkeit tauchen, die dabei stetig umgerührt wird. Die Temperatur des Bads mehrere Minuten lang konstant halten, und die Meßwerte ablesen.

Ein Thermometertest in Luft ist ungenau, da Luft ein schlechter Wärmeleiter ist, und da stets die Gefahr eines Luftzuges besteht, der die Genauigkeit des Thermometers beeinträchtigt.

EINSTELLEN DES ANGEZEIGTEN TEMPERATURMESSWERTS

1. Sichtglas entfernen.
2. Anzeigenadel festhalten. Bei den Gehäusegrößen 114 mm (4½´) und 216 mm (8½´) einem Flachklingen-Schraubenzieher verwenden; bei dem 150 mm-(6´)-Gehäuse die Rändelschraube anfassen.
3. Die Nadel mit Daumen und Zeigefinger der anderen Hand so anfassen, daß sie gedreht werden kann.
4. Mit Hilfe einer vorbereiteten Referenztemperatur die Anzeigenadel auf die angezeigte Temperatur bringen.
5. Sichtglas wieder anbringen.

EINBAU VON THERMOMETERN MIT DIREKTER MESSWERTANZEIGE

AUSRICHTEN DES SYSTEMS

Vor der Installation sollte der Schaft folgendermaßen auf den gewünschten Winkel eingestellt werden:

1. Die sechs in der Abbildung mit „A“ und „B“ markierten Schrauben lockern, so daß die Halterung frei drehbar ist. Nicht mit dem Gehäuse eindrehen.
2. Das Gehäuse festhalten, und die Halterung durch Drehen im oder entgegen dem Uhrzeigersinn (siehe Abbildung) in eine Stellung bringen, in der der Schaft in die gewünschte Stellung zum Gehäuse geschwenkt werden kann. Die beiden Schrauben „A“ wieder festziehen.
3. Den Schaft in die gewünschte Stellung zur Thermometerskala bringen (siehe Abbildung). Die Schrauben „B“ festziehen.

INSTALLATION

1. In der Standardausführung hat das Thermometer eine Schraubarmatur. Bei der Montage des Thermometers an einer Anlage bzw. in einem Thermometerschacht wird der Sechskantkopf der Schraubarmatur mit einem Gabelschlüssel angezogen. Die Armatur zunächst etwas anziehen und dann wie eine gewöhnliche Rohrarmatur so weit festziehen, daß die Skala bequem abgelesen werden kann. **NICHT DURCH DREHEN DES THERMOMETERGEHÄUSES FESTZIEHEN!**
2. Das Thermometer in den Schraubanschluß einführen, und die Kegelringmutter etwas anziehen. Dann nach Art einer Rohrarmatur festziehen.

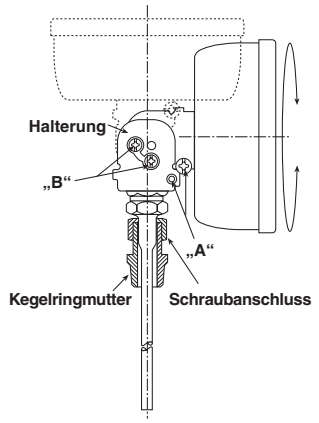

ASHCROFT INC.
250 EAST MAIN ST.
STRATFORD, CT 06614-5145
TEL: 203-378-8281 • FAX: 203-385-0408
EMAIL: INFO@ASHCROFT.COM

www.ashcroft.com
I&M008-10067-2/01(250-2199R3) 4/06
© Ashcroft Inc. All sales subject to standard terms and conditions of sale. Printed in U.S.A.

THERMOCOUPLE OPERATION AND INSTALLATION INSTRUCTIONS

Thermocouples are installed by means of compression fittings, welded 1/2" x 1/2" NPT fittings, or bayonet fittings.

Follow these instructions for installation of a thermocouple with a 1/2" x 1/2" NPT fitting:

(1) Insert thermocouple into process hole
(2) Tighten probe into place by turning probe into threaded connection.

When installing a spring-loaded sensor, the wires should be disconnected from the terminal block to prevent twisting and shorting during installation.

INSTALLATION:

Place thermocouple in area not too close to heating element or direct flame.

When measuring very high temperatures, install thermocouple vertically, if possible, to avoid protection tube element sagging.

Always use thermocouple extension wire to correlate with calibration of thermocouple and instrumentation being used.

Install thermocouple away from AC power lines, preferably more than one foot away.

Do not run thermocouple wires in the same conduit with other electrical wires.

Apply lacquer or silicon resin to screws to prevent effects of vibration and oxidation.

ELECTRICAL:

Make sure the extension wire is clean so a good electrical connection will result at the terminal block. Connect the positive extension wire to the positive thermocouple wire and the negative extension wire to the negative thermocouple wire. Wires are color coded for identification as follows, notice that the negative leg is always red.

	THERMOCOUPLE TYPE			EXTENSION WIRES		
	POS.	NEG.	OUTER JACKET	POS.	NEG*	OUTER JACKET
E	purple	red	brown	purple	red	purple
J	white	red	brown	white	red	black
K	yellow	red	brown	yellow	red	yellow
R	N/A	N/A	N/A	black	red	green
S	N/A	N/A	N/A	black	red	green
T	blue	red	brown	blue	red	blue
N	orange	red	brown	orange	red	orange

See Page 1-9 for IEC color codes for primary conductor and color codes. The outer jacket matches the primary conductor unless specified for an intrinsically safe area, in which case all outer jackets are blue.

*A tracer having the color corresponding to the positive extension may be used on the negative wire code. Occasionally, it is necessary to determine thermocouple polarity in the field. The above characteristics are helpful, along with the information on the following page.

VOGT POWER INTERNATIONAL
Released, Work May Proceed
Hugle, Kathy | Dec-27-2011

4, one hour sessions training video.
$1200.00 - Call for information.

VOGT POWER INTERNATIONAL
V17460-ICXE-559-00
06-Dec-2011

TYPE E-The negative wire has lower resistance in ohms per foot than the positive element for the same size wire.

TYPE J-The positive element is frequently rusty and is magnetic. It has a lower resistance in ohms per foot for the same size wire.

TYPE K-The negative element is slightly magnetic. It has a lower resistance in ohms per foot for the same size positive wire.

TYPE R or S-The negative wire is softer. The positive wire has a lower resistance in ohms per foot for the same size wire.

TYPE T-The negative wire is silver in appearance. The positive wire has a lower resistance in ohms per foot for the same size wire, and is usually copper colored.

TYPE N-The positive leg has a higher resistance in ohms per foot for the same size wire.

Note: When in doubt, twist the wire together, and connect opposite ends to a volt meter. Heat the twisted end with a cigarette lighter. If the volts go up - polarity is correct ...

OPERATION:

The temperature of the connection head should be kept as near room temperature as possible to avoid errors due to the extension wires. The maximum recommended temperature at the terminal block is 400°F.

MAINTENANCE:

The quality and frequency of calibration checks must be determined for each individual application by noting the decalibration rate of each thermocouple at individual installations. Thermocouples will deteriorate due to contamination from their environments. Calibration is usually made by comparison with a working standard. The thermocouple may be removed from its installation and checked in an electric furnace with the working standard; however, check the thermocouple in its installed position and location if possible. See page VI.

Return thermocouples that were removed for tests to the same location and immersion depth for reliable and repeatable readings.

Do not use a thermocouple to measure a very low temperature if it has been used to measure a very high temperature previously.

Make sure protection tubes and thermowells are in good condition when protecting thermocouples with them.

Do not run a single thermocouple to two different instruments. This can result in instrument imbalance. A dual isolated thermocouple should be used instead.

STORAGE:

Store in a clean dry place. Avoid stacking probes in areas of excessive moisture or humidity (ie: dripping, condensation). Special packing with desiccant can be specified. (See page II)

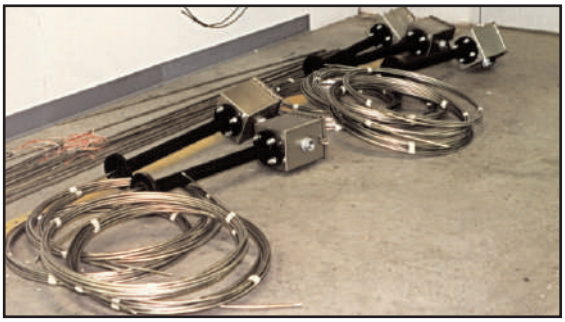

Installation and Maintenance Instructions for ASHCROFT® Pressure Gauges, Gauge Parts and Ring Designs, Engineering Data

ASHCROFT®

SELECTION

Pressure Ranges – Select a gauge with a full scale pressure range of approximately twice the normal operating pressure. The maximum operating pressure should not exceed approximately 75% of the full scale range. Failure to select a gauge range within this criteria may ultimately result in fatigue failure of the Bourdon tube component.

INSTALLATION

Always use a wrench on the flats of the gauge socket to screw the gauge in place. When a fitting is being screwed to the gauge, hold a wrench on the socket flats instead of twisting against the gauge socket screws which are intended to hold the gauge mechanism in the case.

When gauges are mounted on the wall or panel, make sure they are connected free from piping strains. Also see that the mounting surface is flat, or insert washers under the flange of the gauge case to obtain three-point suspension. Preferably, the last length of piping leading up to the gauge should be flexible tubing. This will ensure that the gauge is free from strain.

Install gauges where they will be free from the effects of mechanical vibrations as this will wear out any gauge quickly. Try to mount the gauge on a wall nearby and connect the gauge to the machine which vibrates badly by means of flexible line assembly.

Protect gauges from frequent pressure pulsations by using liquid-filled or Duragauge Plus® with a throttle screw in the socket of the gauge, needle valves, pulsation dampeners or pressure snubbers.

When any gauge is used for steam pressures, a siphon filled with water must be installed between the gauge and the line. When the system is subject to occasional vacuum, provide a leg of piping which cannot be emptied by the vacuum effect. A drain cock or plug should be installed at the bottom of this leg to enable occasional cleaning out of the sediment. The head effect of this piping leg should be compensated for by resetting the pointer of the gauge.

OPERATING CONDITIONS

The operating conditions to which a gauge will be subjected must be considered. If the gauge will be subjected to severe vibration or pressure pulsations, liquid filling the gauge may be necessary to obtain normal product life.Other than discoloration of the dial and hardening of the gasketing that will occur as ambient temperatures exceed 150°F, metal case Duragauges (that are not liquid filled) can withstand continuous ambient temperatures as high as 250°F. Liquid filled gauges can withstand 200°F but glycerin fill and acrylic window will tend to yellow. Accuracy will be affected by approximately 1.5% per 100°F. Gauges with welded joints will withstand 750°F (450°F with silver brazed joints) for short times without rupture, although other parts of the gauge will be destroyed and calibration will be lost. For temperature limits on other gauges see the appropriate bulletin.

PROPER USE

Apply pressure slowly. do not open gauge cock or valve too quickly – this imparts a severe strain on the Bourdon tube which may rupture it, or result in shortened life. When the service itself is subject to sudden pressure applications, use a needle valve or the Ashcroft Gauge Saver.

Avoid overpressure. See that the apparatus is provided with a relief valve and that the range of the gauge is higher than the set pressure of the relief valve.

Sudden pressure release has the same detrimental effect and should be compensated for in the same manner as for the pressure applications mentioned above. On hydraulic presses, Catalog Number 1056 or 1009DH Gauges with slotted link should be specified. See Special Service Bulletin SG-1.

MAINTENANCE

Replace broken glasses and thus keep dirt out of the working bearings and teeth of the movement mechanism.

Never oil gauge movements or linkages except with high grade instrument oil. Regular oil attracts dirt and becomes gummy, thus causing the gauge to act sluggish and inaccurate.

HEAT AFFECTS GAUGE ACCURACY

Approximate error or change in calibration of a Bourdon tube type pressure gauge caused by changes in temperature.

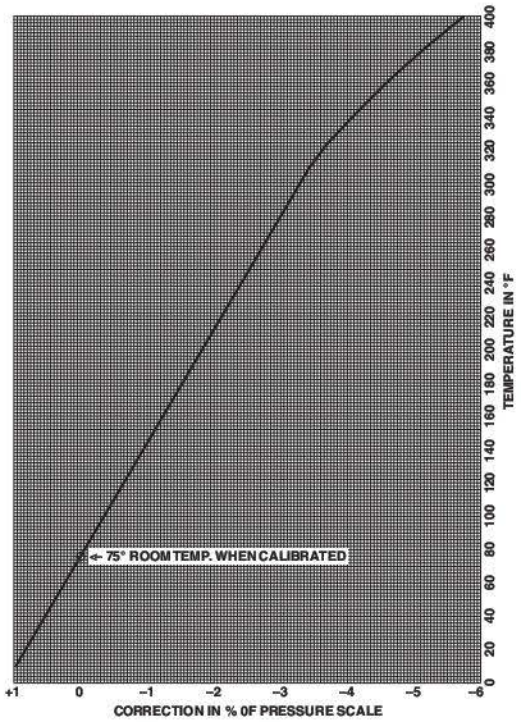

Example: Gauge working at 500 psi pressure at 280°F. temperature would have a –3% correction and would read 3% or 15 psi fast.

VOGT POWER INTERNATIONAL
V17460-ICXE-504-00
29-Sep-2011

VOGT POWER INTERNATIONAL
Released, Work May Proceed
Hugle, Kathy | Sep-29-2011

© Dresser, Inc., Dresser Instrument, 250 E. Main St., Stratford, CT 06614-5145, 203-378-8281, 203-385-0499 Fax, www.ashcroft.com
All sales subject to standard terms and conditions of sale. I&M008-10031-10/00 (250-1997B) GBE

DRESSER Measurement

Installation and Maintenance Instructions for ASHCROFT® Pressure Gauges, Gauge Parts and Ring Designs, Engineering Data

ASHCROFT®

The drawing below shows a typical solid front, lower connection Duragauge with all of the parts designated by their standard names. The use of these names will facilitate the ordering of parts and eliminate any misunderstanding in describing gauge construction.

When ordering parts – specify as much of the following data as possible: *Size* (Dial Diameter); *Case Material* (Stainless Steel, Polypropylene, Aluminum or Phenol); *Case Type* (Open Front or Solid Front); *Ring Design* (Slip, Internal Threaded, External Threaded, Bayonet, Snap or Hinged); *Connection Location* (Lower or Back); *Connection Size* (¼″ or ½″); *Bourdon Tube/Socket* (Material Indicated on Dial); *Dial Range* (Specify type number if possible; otherwise, mention whether parts are for Duragauge, General Service Gauge, Special Application Gauge, Receiver Gauge or Test Gauge.)

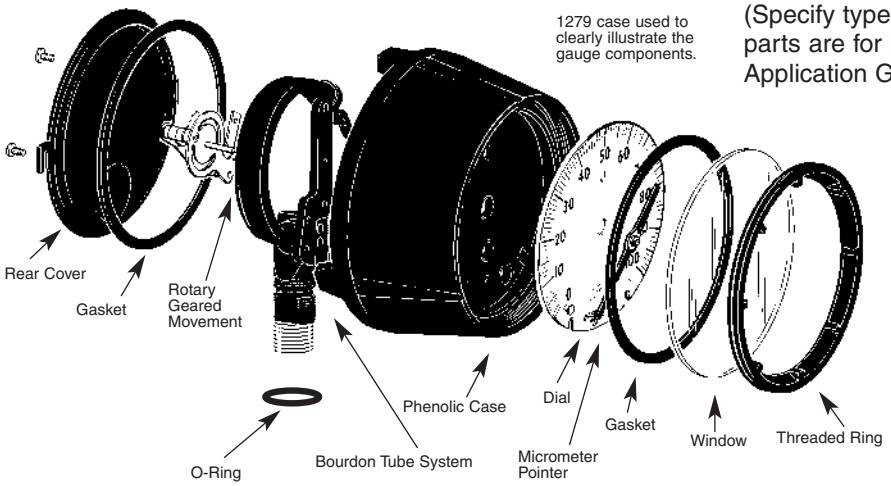

Note: The socket, tube and tip assembly is furnished as one integral unit. The movement is supplied complete.

TYPICAL CONSTRUCTION DETAILS

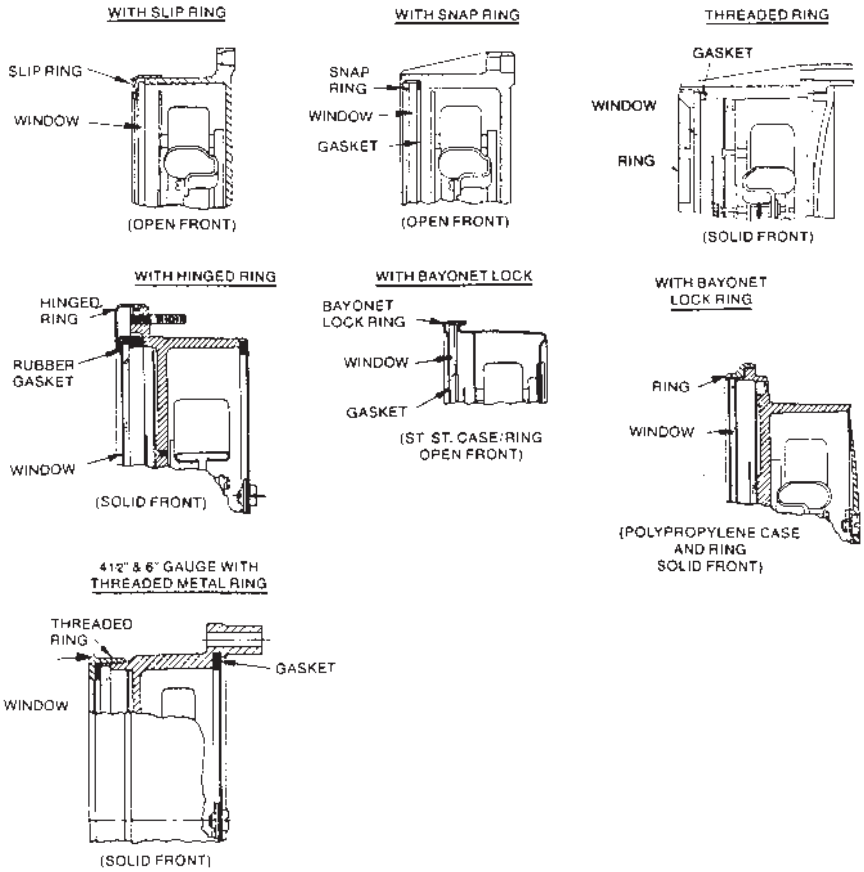

CALIBRATION PROCEDURE

1. Preliminary Gauge Calibration Setting –

(SOLID FRONT GAUGE SHOWN)

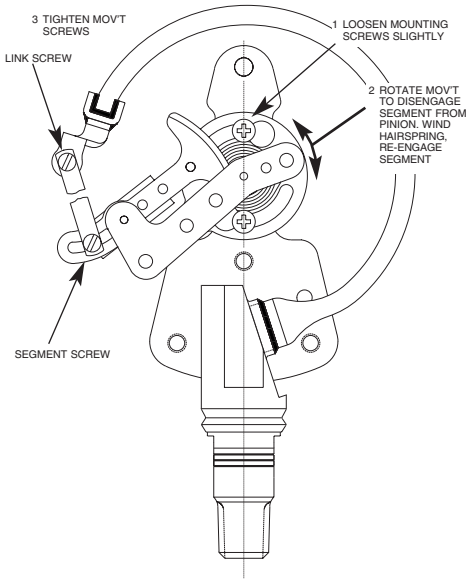

2. Calibration –

a. At zero pressure (or at full vacuum for compound or vacuum gauges), assemble pointer to pinion shaft in the horizontal position.

b. Apply pressure equal to full range and adjust the slide in the segment slot until the pointer has rotated 270° (vertical position).

c. Reduce pressure to zero and reset pointer, if necessary, to horizontal position. If pointer adjustment was required, repeat step (b) above.

d. Apply pressure equal to mid-scale and drive pointer firmly onto pinion.

e. Recheck calibration at the lower and upper ends of the scale.

3. Linearity Adjustment –Although the procedure outlined above should produce a correctly calibrated gauge, linearity adjustment may be required. If the pointer reads correctly at the bottom of the scale and low at the top of the scale, rotate the movement to increase the angle between the link and the segment. If the pointer reads high, rotate the movement in the opposite direction.

© Dresser, Inc., Dresser Instrument, 250 E. Main St., Stratford, CT 06614-5145, 203-378-8281, 203-385-0499 Fax, www.ashcroft.com
All sales subject to standard terms and conditions of sale. I&M008-10031-10/00 (250-1997B) GBE

DRESSER Measurement

OPERATION
&
MAINTENANCE MANUAL

For

Vogt Power International Inc.
Heat Recovery Steam Generators

For

SPP ABPR Amata City CCCP Project
Amata B. Grimm Power (Rayong) 2 Limited

Vogt Power Project No. 17460

Vogt Document No. V17460-OMNE-001

VOLUME 5

OPERATION & MAINTENANCE MANUAL

For

Vogt Power International, Inc.
Heat Recovery Steam Generators

for

SPP ABPR Amata City CCCP Project
Amata B. Grimm Power (Rayong) 2 Limited

Vogt Power Project No. 17460

Vogt Power Document No. V17460-OMNE-001

Written By: Kathy Hugle

Reviewed By: Matt Kreis

Revision: 1
Date: 19 February 2013

The purpose of this manual is to suggest procedures for the operation and maintenance of the HRSG and its subsidiary parts. This guide does not cover all variations in equipment, nor does it provide for every possible requirement or contingency. The specific site conditions, staffing, accessibility, and interfacing equipment must be considered when implementing the information provided herein.

Refer to the Vogt Power International Erection Manual for specific information concerning unloading, storage, and installation of the equipment. Refer to the Vogt Power International Training Manual for operator training. Should other information be desired, or particular situations arise that are not addressed in this manual, the matter should be referred to Vogt Power International.

This manual describes the HRSG, its components and ancillaries to aid the Owner in its development of appropriate procedures for operating and maintaining the equipment. It also contains specific design and performance information, including drawings, equipment lists, and data sheets, purely for convenience. However, this document is not contractual, and should not be referred to in contractual matters.

This document contains minimum procedures for operating and maintaining the HRSG components and is intended to assist the operators in planning and scheduling operational and maintenance activities. It is not intended to and does not cover all details or variations in equipment, or provide for every possible contingency.

INDEX

VOLUME 1 – Vogt Power HRSG O&M Manual

SECTION I DESIGN DATA

Tab 1 - Drawing and Document List
Tab 2 - System Design Description
Tab 3 - Safety Valve Data
Tab 4 - Performance Data
Tab 5 - Start-up Procedure
Tab 6 - Gas Side Pressure Drop
Tab 7 - Heating Surface Data
Tab 8 - Boiler Feedwater and Boiler Water
Tab 9 - Performance Prediction

SECTION II OPERATIONAL PROCEDURES

Tab 1 - Safety Precautions
Tab 2 - Suggested Operational Procedure
Tab 3 - Removal from Service, Lay-up, and Long Term Storage
Tab 4 - Tube Failure Analysis
Tab 5 - Troubleshooting Procedures
Tab 6 - Maintenance Checklists
Tab 7 - Pressure Part Life
Tab 8 - Warranty, Inspection and Maintenance Reports and Forms

SECTION III COMMISSIONING PROCEDURES

Tab 1 - Preliminary Filling and Flushing
Tab 2 - Hydrostatic Test
Tab 3 - Alkaline Boilout
Tab 4 - Chemical Cleaning
Tab 5 - Steam Blow Cleaning
Tab 6 - Commissioning

SECTION IV SUBVENDOR MANUALS

Volume 2 – Diverter Damper

Volume 3 – Valves and Inline Components

Tab 1 - Control Valves
Tab 2 - Safety Valves
Tab 3 - General Service Valves
Tab 4 - General Service Valve Actuators
Tab 5 - Strainers
Tab 6 - Steam Sample Nozzles
Tab 7 - Instrument Valves
Tab 8 - Attemperators

Volume 4 – Instrumentation

Tab 1 - Transmitters
Tab 2 - Level Gauges and Remote Level Indicators
Tab 3 - Thermocouples & Temperature Indicators
Tab 4 - Pressure Gauges & DP Gauges

Volume 5 – Deaerator & Heat Exchanger

Tab 1 - Deaerator
Tab 2 - Heat Exchanger

Volume 6 – Miscellaneous Equipment

Tab 1 - Outlet Expansion Joints
Tab 2 - Inlet Expansion Joints
Tab 3 - Steam Silencers
Tab 4 - Pipe Supports
Tab 5 - Flow Elements
Tab 6 - Aircraft Warning Lights
Tab 7 - Stack Silencers

AMATA B. GRIMM POWER (RAYONG) 2 PROJECT

MABYANGPORN DISTRICT, RAYONG PROVINCE, THAILAND

INSTALLATION, OPERATION, & MAINTENANCE MANUAL
FOR:
MODEL NO.: 96 VTHS-5237-10Ø1810 DEAERATOR & STORAGE TANK
AND
MANUFACTURER'S DATA REPORTS
BY: VESSELTECH ENGINEERING SDN BHD

VOGT POWER INTERNATIONAL
LOUISVILLE, KENTUCKY, USA
PURCHASE ORDER NO.: V0004413
PROJECT NO.: 17460 ~ TAG NO.: 02LAA10BB002

MANUFACTURER:
Sterling Deaerator Company
4215 NE Port Drive, Suite 100
Lee's Summit, Missouri 64064 U.S.A.
Phone: (816) 795-6010
Fax: (816) 795-6011

STERLING JOB NUMBER: 2011-6049

SDC DOCUMENT NO.: 6049-IOM REV. 0

VOGT POWER INTERNATIONAL	
Released, Work May Proceed	
Hugle, Kathy	Sep-12-2012

VOGT POWER INTERNATIONAL
V17460-DAXE-500-02
14-Aug-2012

Sterling Deaerator Company
4215 NE Port Drive, Suite 100 ♦ Lee's Summit, MO 64064
(816) 795-6010 ♦ FAX (816) 795-6011 ♦ E-Mail: sterling@sterlingdeaerator.com

TABLE OF CONTENTS

SECTION 1	**SAFETY INFORMATION**
	1.1 Safety Responsibility **1.2 Boiler Plant System** **1.3 Deaerator** **1.4 High Pressure** **1.5 High Temperature** **1.6 Internal Danger** **1.7 General Maintenance** **1.8 Accessory Equipment (If Applicable)** **1.9 Pumps (If Applicable)**
SECTION 2	**DESCRIPTION OF DEAERATION EQUIPMENT**
	2.1 The Deaerating Principle **2.1.1 Deaerator Operation – Stage One** **2.1.2. Deaerator Operation – Stage Two** **2.1.2.1 Tray Type Deaerator** **2.1.2.2 Spray Type Deaerator** **2.2 Spray Valve** **2.3 Tray Assembly** **2.4 Operation of the Deaerator** **2.4.1 Venting** **2.4.2 Orifice Type Vent** **2.5 Insulation** **2.6 Elevation of Deaerating Heater** **2.7 Installation** **2.8 Operation of Equipment** **2.8.1 Recommended Good Practice for Temperature Changes** **2.8.2 Hydrostatic Testing** **2.9 Recommended Procedure for Storage of Pressure Vessels** **2.9.1 Internal Preparation** **2.9.2 External Preparation** **2.9.3 Maintenance Requirements** **2.9.4 Suggested Prime and Finish Coats**
SECTION 3	**DESIGN SPECIFICATION ~ DRAWINGS**
	A-6049-1 Rev. 0 Sterling Nameplate Stamping **A-6049-2 Rev. 1 HRSG Nameplate for Deaerator** **C-6049-1 Rev. 3 General Notes & Nozzle Schedule** **D-6049-1 Rev. 0 Outline of Deaerator**
SECTION 4	**DEAERATOR APPARATUS**
	4.1 Accessories **4.2 Piping Connections** **4.3 Relief Valves** **4.4 Vacuum Breakers** **4.5 Thermometers** **4.6 Pressure Gauges** **4.7 Other Equipment** **4.8 Maintenance and Inspection** **4.9 Bill of Material – Rev. 0** **4.10 Troubleshooting Guide** **4.11 Spare Parts List – Rev. 0**
SECTION 5	**MANUFACTURER'S DATA REPORTS – BY VESSELTECH**

Sterling Deaerator Company
4215 NE Port Drive, Suite 100 ♦ Lee's Summit, MO 64064
(816) 795-6010 ♦ FAX (816) 795-6011 ♦ E-Mail: sterling@sterlingdeaerator.com

1. Safety Information

1.1 Safety Responsibility

All safety begins and ends with a responsible and informed person whose personal welfare is the primary concern.

It is the responsibility and obligation of the owner/user of a deaerator to insure that all persons who may come in contact with the deaerator are familiar with its operation, maintenance, and safety requirements.

Manways and/or relief valves may or may not be tagged with safety tags, as below:

WARNING

HIGH TEMPERATURE AND HIGH PRESSURE FLUID DISCHARGE MAY RESULT IN SERIOUS INJURY.

WARNING

VESSEL SUBJECT TO HIGH PRESSURE, TEMPERATURE, AND OTHER POSSIBLE DANGERS. READ INSTRUCTION MANUAL BEFORE DISASSEMBLY OR ENTRY.

WARNING

SEE ADDITIONAL WARNINGS BELOW:

CAUTION

SEE ADDITIONAL CAUTIONS BELOW:

WARNING!: VESSEL MAY BE PROTECTED BY NITROGEN (NO OXYGEN) GAS PRIOR TO PUTTING THE UNITS IN SERVICE OR DURING EXTENDED PLANT SHUTDOWN. PLEASE READ INSTRUCTION MANUAL BEFORE ENTRY.

1.2 Boiler Plant System

The deaerator is only part of a large steam making system. Persons who come in contact with the system must know all safety rules of the deaerator and connecting and related equipment. The owner must provide the overall system safety procedures.

1.3 Deaerator

Following are potential dangers associated with a deaerator. Do not attempt to disassemble, repair, perform maintenance or otherwise work on a deaerator until all of the potential dangers have been considered and their respective safety precautions followed.

1.4 High Pressure

The deaerator is pressurized during operation and the pressure may remain high after the equipment is shut off. Removal of manway covers; inspection ports or any bolted connections while pressure exists in the vessel can cause the covers, etc. to break loose or discharge hot, high-pressure fluids, which could cause injury. Therefore, disassembly or work on the deaerator should not begin until the following precautions have been taken:

a. Isolate the vessel from the boiler system to insure that there can be no operation, residual or otherwise, of the deaerator. Plant system safety procedures must be consulted to insure proper isolation.
b. Check to see that pressure gauges are properly functioning and that the pressure gauges or other pressure indicators show zero pressure.
c. Carefully open vent valves provided on vessel. Open valves very slowly. Listen for hissing sounds and observe any escaping steam or fluids. If hissing or escaping fluids are present, do not continue to open until all sound or fluid discharge stops.

1.5 High Temperature

The deaerator operates at high temperatures that could cause severe burns. When the vessel is shut off, it can take hours or days to cool to safe temperatures. Any temperature in excess of 212°F (100ºC) could also indicate the presence of internal pressure. Therefore, disassembly or contact with metal parts should not begin until the following precautions have been taken:

a. Isolate the vessel from the boiler system to insure that there can be no operation, residual or otherwise, of the deaerator. Plant system safety procedures must be consulted to insure proper isolation.
b. Check thermometers or other temperature indicators for proper functioning and assure that temperature is less than 100°F (38ºC).
c. Use a temperature sensor or comparable device to determine whether the deaerator has sufficiently cooled.

1.6 Internal Danger

EXTREME CAUTION SHOULD BE EXERCISED BEFORE ENTERING THE DEAERATOR.

First, deaerators may contain oxygenless gasses (e.g., nitrogen) that can cause severe illness or death if inhaled. Deaerators are frequently shipped with nitrogen. Many owners and users of deaerators also pressurize the deaerator with nitrogen during short or long-term inactivity. Nitrogen is colorless and odorless and cannot be easily detected. Because of the absence of oxygen in gasses such as nitrogen, inhalation of sufficient amounts can cause severe illness or death. Therefore, do not enter the deaerator until precautions listed below have been taken.

Second, the inside of the deaerator may be very tight and confining. It may also contain sharp corners and protrusions, which could cause injury. Any person entering a deaerator should be knowledgeable of the proposed Occupational Safety And Health Act (OSHA) requirements on confined space entry and should follow the precautions listed below.

THE FOLLOWING GENERAL PRECAUTIONS MUST BE TAKEN BEFORE ENTERING THE DEAERATOR:

a. Isolate the vessel from the boiler system to insure that there can be no operation, residual or otherwise, of the deaerator. Plant system safety procedures must be consulted to insure proper isolation.
b. The work crew should consist of two or more people at all times.
c. Determine that the deaerator contains sufficient oxygen and does not contain any other dangerous gas.
d. Open all vents, manways, or access openings to permit all oxygenless gas to escape and properly ventilate the deaerator. It may be necessary to utilize exhaust fans, ventilators and blowers to speed the ventilation process. Maintain adequate circulation of oxygen throughout work on the deaerator.
e. Provide adequate scaffolding, platforms, and ladders.
f. Provide adequate lighting.
g. Understand the construction of the equipment and all relevant safety requirements.
h. Use appropriate safety equipment including, but not limited to, hard hats, safety glasses or goggles, gloves and heavy duty work clothing.

1.7 General Maintenance

The maintenance section of this manual and the instructions in the accessory section provide normal maintenance procedures for the deaerator. Additionally, the following maintenance inspections should be performed to assure continued safe operation.

a. Inspect for cracks, breakage of internal parts and internal erosion or corrosion in or near welds or pressure parts (e.g., shells and heads).
b. Inspect pumps for loose bolts or coupling parts. If the pumps are disassembled, examine all bearings, shafts, impellers, and seals for wear and damage.
c. Safety and relief valves should be activated periodically to assure proper performance. These valves should also be inspected to assure that no external devices such as "gags" or extraneous parts can impede proper operation.
d. Make certain that all safety tags are replaced when maintenance and inspections are complete.

1.8 Accessory Equipment (If Applicable)

Safety valves, relief valves, and other blow-off type equipment (also vacuum breaking equipment) are used to protect deaerators against damage, and all deaerators are protected by one or more safety devices. These devices are designed to discharge in the event that some operating condition causes the deaerator to exceed the standard operating level. This equipment partially relieves the pressure in the vessel and prevents damage.

The discharge from this equipment is extremely hot and can cause severe injury. Therefore, the following safety precautions should be observed in order to prevent personal injury:

a. If customer is installing these devices, locate them in areas where personnel cannot come in close contact during operation.
b. Each device should have a suitable exhaust duct, pipe, or deflector to insure the discharge (or vacuum suction) cannot cause personal injury.
c. Since these safety devices are not necessarily provided by Sterling Deaerator, it is necessary to consult the maintenance, operation, instruction and safety manual of the specific supplier.

1.9 Pumps (If Applicable)

Various pumps are used with every boiler feed water system. Injury can occur if proper operation and maintenance procedures are not followed. Therefore, persons performing maintenance on pumps should obtain all instructions, procedures, and safety requirements. Additionally, the following general safety practices should be followed:

a. All pumps must be installed with a negligible pipe load on the pump inlet and outlet flanges in the cold condition. Excess loading on these nozzles will affect the manufacturer's warranty. If damage to the pump occurs from non-relieving pipe loading during installation then the pump warranty will likely be void.
b. A qualified professional prior to operation of the pump must precisely realign all pumps due to shipping and transit rigors. Failure to do so will affect the manufacturer's warranty. If damage occurs to the pump without proper realignment in the field, the pump warranty will likely be void.
c. Avoid working on the pump while it is operating.
d. If running adjustments are necessary, avoid wearing loose clothing that could become entangled with rotating parts.
e. Always assure that proper electrical disconnections and positive valve lockouts are used.
f. If the pump must be dismantled, beware of hot fluids and high pressure.

2. Description of Deaeration Equipment

2.1 The Deaerating Principle

Today a deaerator is an essential part of a steam system. Corrosion in boiler cycles is caused mainly by the presence of noncondensable gasses such as oxygen and carbon dioxide, or by a low pH value. While the pH is raised by the addition of chemicals, it is more economical to remove noncondensable gasses mechanically. This mechanical process is known as deaeration and its employment increases the life of a steam system dramatically.

Using Henry's law of partial pressures, the principle behind deaeration can be explained as follows: The quantity of a gas dissolved in a given quantity of liquid is directly proportional to its partial pressure surrounding the liquid. Therefore, by reducing the partial pressure of the unwanted gasses in the surrounding atmosphere, the gasses are diminished. These partial pressures are reduced by spraying the liquid into a countercurrent flow of steam. The steam, which is free of noncondensable gasses, is the liquid's new atmosphere and Henry's law prevails. Using steam is advantageous in that the solubility of a gas in a liquid decreases with an increase in the temperature of that liquid. The liquid is sprayed in thin films in order to increase the surface area of the liquid in contact with the steam, which, in turn, provides more rapid oxygen removal and lower gas concentrations.

With these principles in mind, Sterling Deaerator employs a two-stage system of heating and deaerating feedwater. This system reduces oxygen concentration to less than 0.005 cc/liter (7 ppb), and completely eliminates the carbon dioxide concentration when tested by the APHA method. Testing for oxygen concentration shall be done in accordance with ASME Performance Test Code 12.3. Other methods of testing may be used if mutually agreed upon by the parties involved.

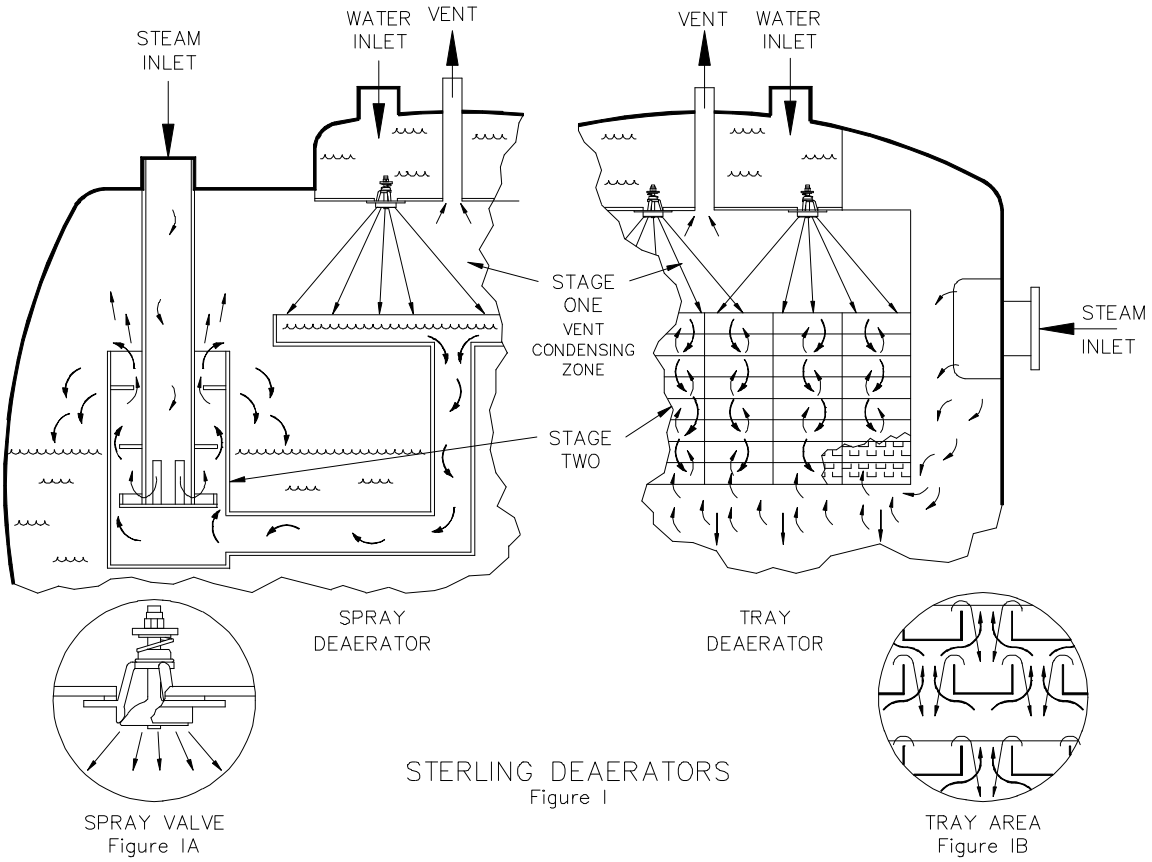

STERLING DEAERATORS
Figure I

2.1.1 Deaerator Operation - Stage One

The first stage of deaeration is shown in Figure I. The prime element in our vent condenser zone is the self-adjusting spray valve that allows incoming water, which is to be deaerated, to discharge as a thin-walled, hollow cone spray (See Figure IA). Because steam flows countercurrent, intimate water to steam contact occurs with consequent latent heat transfer. As the falling water reaches the tray stack (tray type deaerator), or the collection basin (spray type deaerator), its temperature is within 2°F (1ºC) of the counter-flowing saturated steam temperature. Most of the dissolved oxygen and free carbon dioxide have been removed at this point. Since nearly all of the steam has been condensed, the noncondensable gasses and the small amount of "transport" steam exits through the vent piping

2.1.2 Deaerator Operation - Stage Two

2.1.2.1 Tray Type Deaerator

The partially deaerated water enters the tray stack at saturation temperature. The heated water flows down over the trays, zigzagging as shown in Figure IB through counterflow steam. This

arrangement provides additional retention time to allow a final oxygen strip by the purest steam. The two-stage tray deaeration technique is the most reliable method for meeting critical performance over a complete load range.

2.1.2.2 Spray Type Deaerator

Water from the collection basin flows down the vertical downcomer and into the scrubber section where it comes in contact with upcoming steam. Through carefully sized orifices, the steam and water violently mix, heating and removing the remaining gasses from the water. The mixture moves to the top of the scrubber housing and there the steam separates from the water and gasses and continues to flow up into the spray area and the vent condensing zone (Stage One of our deaerator). See Figure I.

Water from the collection basin flows down the vertical downcomer and into the scrubber section where it comes in contact with upcoming steam. Through carefully sized orifices, the steam and water violently mix, thus setting off heating and flashing of the water as it propels the mixture to the top of the scrubber housing. At this point steam separates from the mixture and continues to flow up into the vent condensing zone, or Stage One of our deaerator. See Figure I.

2.2 Spray Valve

CAUTION!: USE ONLY HAND TOOLS WHEN INSTALLING OR REMOVING NUTS AND ATTACHING SPRAY VALVES TO SPRAY VALVE SUPPORT PLATE.

CAUTION!: DO NOT USE ANY POWER ASSISTED TOOLS OR APPLY UNDUE FORCE WHEN REMOVING THESE NUTS.

Should the nuts appear to bind, brush the exposed threads with a wire brush and/or apply some type of lubrication (if acceptable).

CAUTION

SEE CAUTIONS IN SAFETY RESPONSIBILITY SECTION

Sterling's streamlined spray valve produces maximum water surface, providing ideal heating of the water to be deaerated. This configuration is ruggedly constructed to withstand the severest of deaerator operating conditions. The spring-loaded valve is self-adjusting, thereby assuring over a complete flow range, a well- patterned, hollow thin film cone. It does not clog as guided valves do or corrode and is virtually free of wear vibration. The type 3l6 stainless steel body and

valve stem investment castings benefit from A O D (Argon-Oxygen-Carburization) refined steel by precise chemistry control and improved corrosion resistance.

The valve body and stem are held in an adjustable, spring-loaded retainer ring by a 1/2 inch (12.7 mm) stainless steel hex nut and lock washer so the stem is never in contact with the valve body. The plug is parabolic in shape and rests against a spherical seat. During operation the smoothly rounded valve plug remains centered in the valve throat, much the same as a balloon supported by an air jet, and the incoming water flows uniformly into the formation of its hollow cone spray pattern. Each spray valve assembly is installed using two 1/2 inch (12.7 mm) hex nut and lock washers. Ring gaskets are made of 100% Teflon. The pressure drop across a spray valve operating at normal design flow rate is 2 psi (0.14 Bar).

Two basic problems are encountered in the spray stage of deaerator operation. The first is entrapment of scale or foreign objects in spray valves utilizing steam guides. This condition leads to jamming of the valve plug in a fixed pattern. Even without foreign matter interference, the normal lateral movement of the valve stem against the stem guides can cause rapid wear and breakage.

The second problem occurs when low flow rates, start-ups or sudden flow changes are imposed upon spray valves or other devices of fixed orifice design. This results in a collapse of the spray pattern into solid streams with poor surface exposure, sluggish heat transfer and poor utilization of steam in the vent condensing chamber. It also shortens the exposure time during which pure steam is stripping non-condensables from the water droplets in the tray stack or scrubber. Sterling's spray valve assembly eliminates both of these problems.

Variations in flow rates are accommodated by utilizing a variable orifice opening which varies in direct proportion to fluctuations in inlet water flow. This results in a thin-walled, hollow cone spray pattern at different flow rates, and the intimate steam-water contact that prevails during this thin-film phase allows for extremely rapid latent heat transfer. Thus the angle and shape of the spray pattern persists despite sudden changes in the flow rates such that first-stage heating and deaeration are assured.

2.3 Tray Assembly

The severe operating conditions, erosive impingement, and occasional upsets to which deaerator trays are subjected have been the criteria for the design, material selection, and hold-down system for the tray stack, now proven in more than 3000 installations.

Careful inspection and evaluation of any proposed tray design are strongly suggested. The tray stack is an area of the deaerator in which rugged construction and material durability are mandatory, not only because of this important performance role served by each tray, but also because transient periods and upset conditions can be very punishing to the entire tray system.

Each tray assembly consists of eight trays arranged in two staggered tiers of four each, and rigidly fastened between two headers with stainless steel rivets. The trays are formed into channels of 16 gauge, type 430 stainless steel.

The assemblies are nested vertically to form tray modules, which sit side-by-side to comprise the tray stack. Very important to note is the tray channel troughs are installed facing upward. There are several operating advantages in this arrangement.

First, the water-filled tray channels provide an exclusive "water cushion" effect and absorb the erosive action of the falling water. Second, the staggered tray channels create a series of flow reversals and vigorous scrubbing action as the water cascades downward in the countercurrent of steam. Uniquely, the droplets leaving the bottom of the tray stack are being "stripped" by the steam in its purest state. Third, the detention time afforded by the tray channel troughs is exceedingly important during wide swings in load and steam volume because it allows for the necessary steam-water contact time to assure final deaeration.

Finally, it is suggested the tray assembly be viewed from beneath so as to gain a perspective of the strength and relatively low pressure drop that would be presented by the tray stack to an upset condition. The smooth side of the tray channel faces down such that minimum flow resistance and maximum strength are there to absorb pressure differentials.

Sterling Deaerator Company
4215 NE Port Drive, Suite 100 ♦ Lee's Summit, MO 64064
(816) 795-6010 ♦ FAX (816) 795-6011 ♦ E-Mail: sterling@sterlingdeaerator.com

CAUTION NOTE: See the safety instructions in the Instruction manual before entering the vessel.

TRAY INSTALLATION PROCEDURE

STEP 1. Prior to assembly of any trays, check the tray enclosure length, width, height and squareness to assure that no distortion has occurred in the installation area.

STEP 2. For alignment and fit-up, install trays (one deep) across the back of the enclosure (opposite Manway end) and install trays (one deep) along the side of the enclosure to assure proper fit into the enclosure (See Step #2 page).

STEP 3. The correct procedure for stacking trays is shown on Step #3 page. Care shall be taken to avoid bending or damaging tray tabs. (If edges of trays are serrated, serrations must face downward.) Trays should be flush with the enclosure wall.

STEP 4. The hold-down angles are installed after all trays have been installed.

Slide the back hold-down angle over the bolts that stick through the back of the enclosure through the slots on the angle. Install the washers and lock nuts on the ½" [12.7mm] studs. Push down the angles snug on the trays and tighten the nuts.

NOTE: Only enclosures that are two bays deep will have a middle hold-down angle. If applicable, install the middle hold-down angle by sliding the angle over the bolts through the slots on the hold-down angle end plates. Install the washers and lock nuts on the ½" [12.7mm] studs. Push down the angles snug on the trays and tighten the nuts.

Slide the front hold-down angle bolts through the front of the enclosure through the slots on the enclosure wall. Install the washers and lock nuts on the ½" [12.7mm] studs. Push down the angles snug on the trays and tighten the nuts.

IMPORTANT: TRAYS SHOULD FIT SNUGLY SO PROCEDURE NEED NOT BE REPEATED.

Sterling Deaerator Company
4215 NE Port Drive, Suite 100 ♦ Lee's Summit, MO 64064
(816) 795-6010 ♦ FAX (816) 795-6011 ♦ E-Mail: sterling@sterlingdeaerator.com

***80 Trays for this Job**

TRAY FIT UP

Number of trays will vary per job

Position trays as shown for alignment. (1 - row only)

6 - Wide

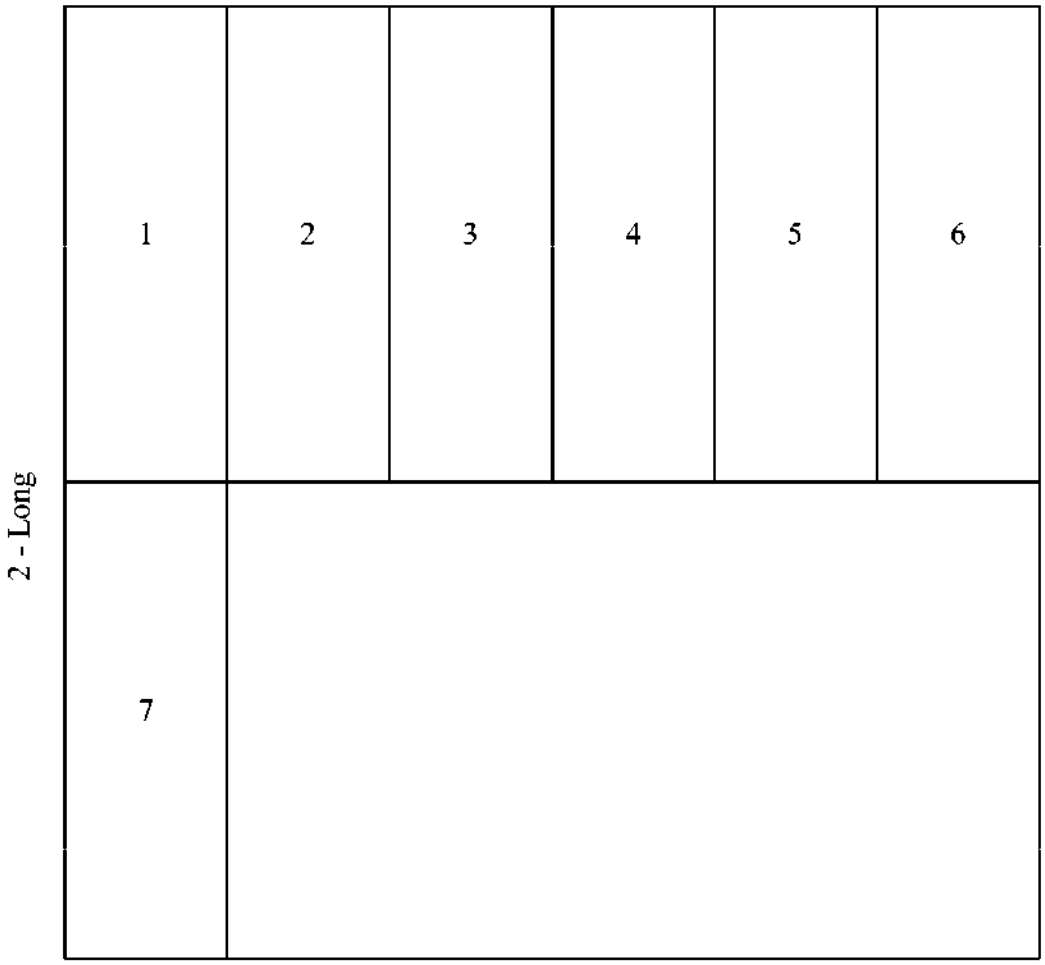

Tray Loading Door This End

STEP #2

Sterling Deaerator Company
4215 NE Port Drive, Suite 100 ♦ Lee's Summit, MO 64064
(816) 795-6010 ♦ FAX (816) 795-6011 ♦ E-Mail: sterling@sterlingdeaerator.com

TRAY STACKING

Stack trays eight deep across complete enclosure

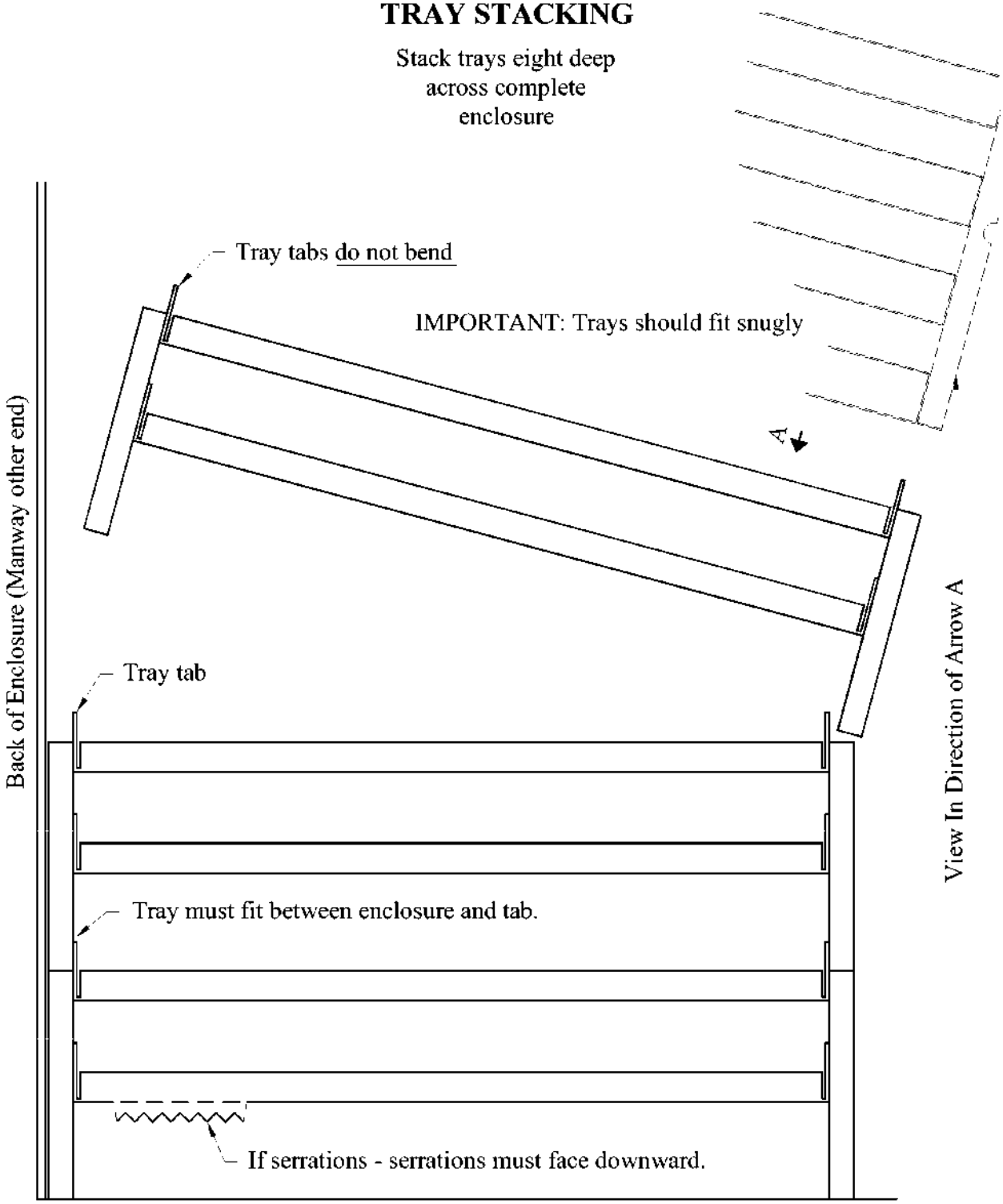

STEP #3

Sterling Deaerator Company
4215 NE Port Drive, Suite 100 ♦ Lee's Summit, MO 64064
(816) 795-6010 ♦ FAX (816) 795-6011 ♦ E-Mail: sterling@sterlingdeaerator.com

TRAY HOLD DOWN

Push down the angles snug on the trays

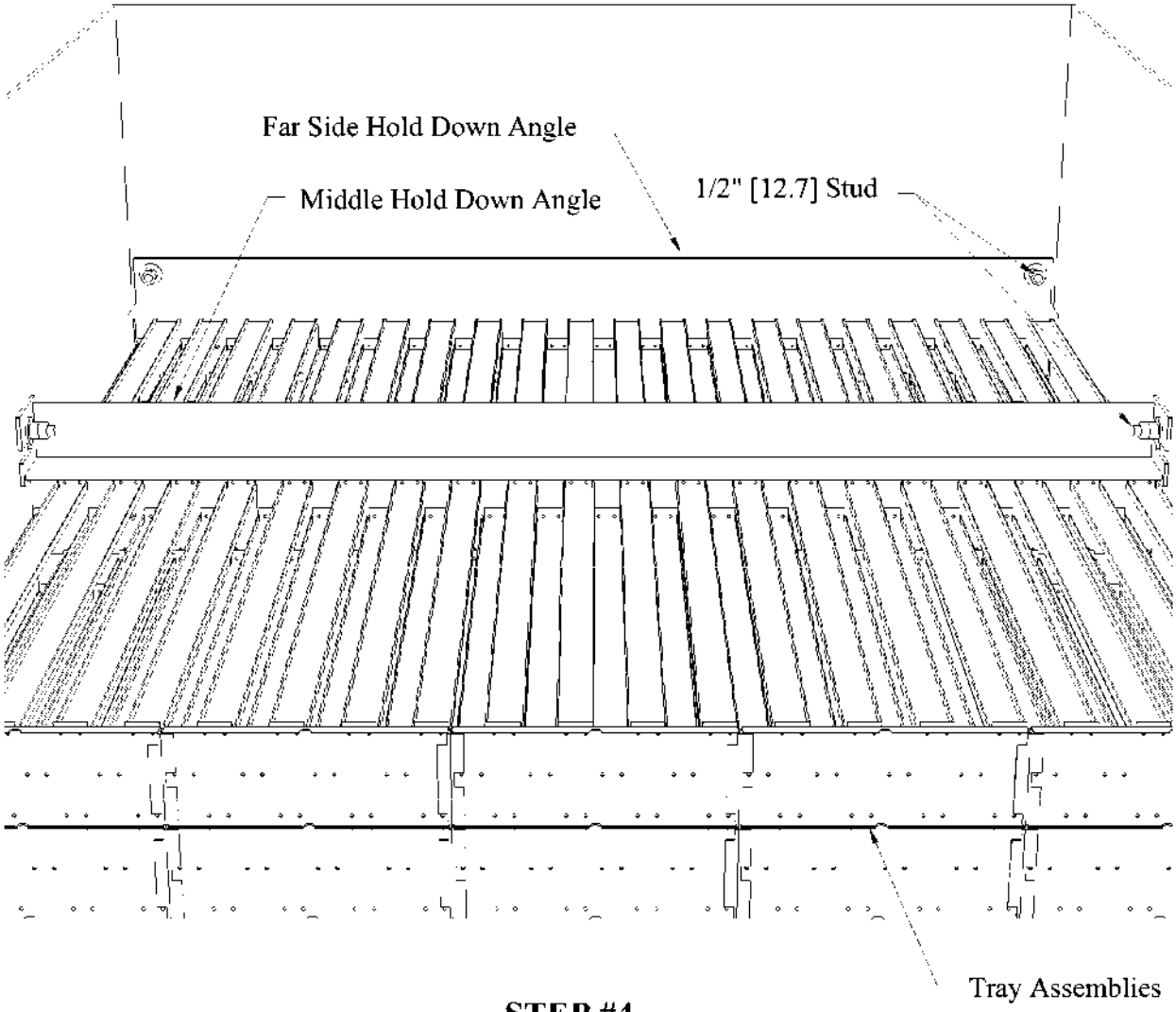

STEP #4

2.4 Operation of the Deaerator

Efficient removal of the non-condensable gasses from the deaerating heater requires that the vent valve be opened sufficiently to allow complete discharge of the gasses passed to the vent condenser outlet pipe. The maximum concentration of the non-condensable gasses such as oxygen or carbon dioxide passing out the vent depends on the degree of condensation produced by the steam and gas mixture passing through and around the spray created by the special spray valve. The optimum condition is when the unit is venting all non-condensable gasses with the minimum steam loss. This point can only be found through trial and error.

A vent condenser is not functioning properly when there is entrainment of water in the plume discharging to the atmosphere or where a steam plume cannot be observed, or the plume appears to be puffing. These malfunctions can be caused by any of a number of reasons such as insufficient vent opening, erratic spray valve action or incorrect vent piping.

2.4.1 Venting

The vent valve should not be operated in a closed position. Normally, the valve should be open one or more turns to allow for complete removal of the gasses. To assure that the vent valve is not inadvertently closed completely a small hole may be drilled in the gate of the vent valve. To determine the correct amount of opening required, the vent valve should be opened approximately one or two turns and the effect on the temperature noted. If no appreciable effect on the temperature is noted after a period of one hour, oxygen tests should then be made to determine the effectiveness of venting; satisfactory reduction of oxygen is obtained when tested by a recognized sampling and testing procedure. The vent setting of the valve can be further decreased by tightening the vent valve. Normally, the plume of steam would indicate sufficient venting if it appears firm and rises approximately 18 inches (457.2 mm) to 3 feet (914.4 mm) above the termination of the pipe. If after reducing the vent valve openings a drop in operating temperature is observed, or a difference between outlet temperature of the water in comparison with the saturated temperature of the steam is observed, then the venting is not adequate and the vent valve or orifice must be opened further.

2.4.2 Orifice Type Vent

Where loads are very small or where uniform operation (flow rates and pressures) can be expected for long periods of time a fixed orifice may be employed. This would usually consist of a drilled pipe cap mounted above the vent valve. The vent valve should always be full open, and precautions noted above should be observed. The optimum size of the hole in the orifice cap can best be found by drilling a small hole (1/8" to 1/4") (3.2 to 6.4 mm) and checking the dissolved oxygen in the effluent. Also, observe the water temperature to see that it is at saturation temperature of the steam within the heater. If the oxygen reading is high or the temperature is low, increase the hole size in the orifice and recheck. Repeat until oxygen is below the guarantee level and the temperature rises to steam saturation temperature.

2.5 Insulation

The deaerating heater, storage tank and all equipment carrying hot water or containing steam should be thoroughly insulated to prevent loss of heat. This includes all external stiffening rings. Sample connections and thermometer wells should not be covered, and provision should be made to allow for annual inspection through manholes and to inspect control valves, level controllers, etc., without damaging the insulation and covering.

The insulation selection, in addition to protecting the vessel and preventing heat loss, must take personnel health and safety into consideration. The outer surface of the insulation and lagging steam must be maintained at a temperature which is safe for personnel working on or near the equipment. Insulation materials must comply with OSHA regulations.

2.6 Elevation of Deaerating Heater

Any deaerating heater must be elevated above the boiler feed pump to insure sufficient net positive suction head on the inlet side of the boiler feed pump. The minimum head required on the suction of the pump should be carefully checked with the pump manufacturer, emphasizing the fact that the pump is handling water at a temperature corresponding to the saturated temperature of the steam supplied to the deaerating heater. Flashing and consequent "steam binding" of the pump may occur if the boiler feed pump is operated with low or negative suction head. The suction head is considered that distance from the low water line in the deaerating heater or bottom of storage tank to the centerline of the feed pump.

2.7 Installation

Vessel installation should follow all applicable plant and code safety regulations. The vessel installation chronology is as follows: ***(Note: Lugs should be confirmed adequate for lifting the entire vessel dry weight. On occasion slings are required to lift the entire empty weight since some lugs are added as quides only).***

1. Install storage tank slide plates (if applicable) on the support structure per Sterling Installation Drawings.
2. Set storage tank on support structure and add anchor bolting or set vessel on anchor bolts.
3. The heater vessel should then be mounted on top of the storage vessel.
4. The connecting nozzles between the vessels should be either welded or flanged (whichever is applicable). Slight adjustment may be required to obtain the best fit-up of the connecting nozzles.
5. Add connection bolting between heater supports and corresponding supports on storage vessel.
6. Secure and tighten anchor bolts and connection bolting. All sliding support bolting should be hand tightened and tack welded only.
7. Connect process piping in appropriate sequence.

Sterling Deaerator Company

4215 NE Port Drive, Suite 100 ♦ Lee's Summit, MO 64064
(816) 795-6010 ♦ FAX (816) 795-6011 ♦ E-Mail: sterling@sterlingdeaerator.com

DEAERATOR AND STORAGE TANK INSTALLATION FLOW

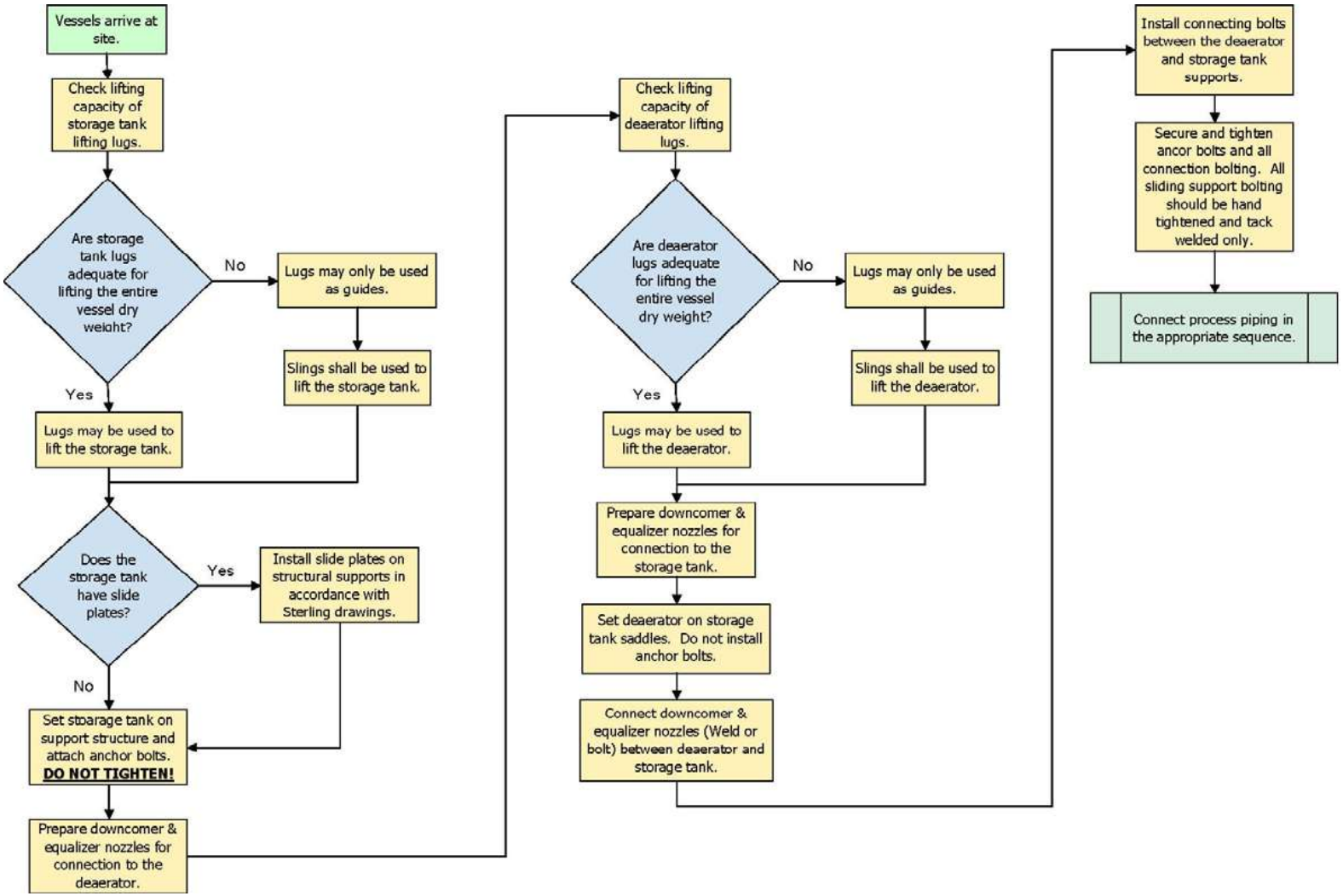

Inspection should occur before start up. Every deaerating heater has been designed to meet specific operating conditions. Fabricating and inspection procedures are the best known. The material selected for each of the components has been proven over many years of service to be the best for the service within economic considerations. However, before the unit is installed and operated, it is strongly suggested that the deaerating heater be rechecked to insure no damage has occurred to the heater since its inspection.

The spray valves should be checked to insure that they are installed correctly with the spring on the water side of the water chamber. Stainless steel hex nuts and lock washers are used to fasten the valve to the vessel so they will not loosen under any load. The nuts should be tight and the gasket should be firmly seated. Inspection should be made to make sure all internal inspection plates are in place, tightly bolted, and that all debris has been removed from the tank. This is especially true after all piping connections are made and the unit is flushed out. It is recommended that the water side of the water box be checked if the pipe lines have been hydraulically flushed, as often debris will wash in and will lodge in this compartment and eventually work through the deaerating heater to the boiler feed pump. Baffles should be inspected to insure that no damage occurred during shipping or installation, such as cracks of welds or other points that could be subject to damage.

Trays are shipped either separately boxed or are sometimes installed within the heater. Refer to your job bill of material under "Tray Assembly" to determine how these are shipped. If shipped within the heater, inspection should be made to ascertain that no damage accrued during shipping or rigging. The trays should be level and nested together with no gaps or spaces between. To inspect or install trays, it is necessary to open the access door and the inner tray door or holding braces. The trays should be installed as indicated on the internal assembly drawing. Some trays have serrated edges; install these with the edges (saw teeth) pointing down. For trays with channel-shaped sections, install with the channel flanges pointed up.

The vent piping should be installed with no sharp vent bends or trays that could obstruct the flow of gasses. The ideal vent pipe rises vertically from the heater to the valve located above the junction of the vessel in a short length of pipe above the valve. This is normally satisfactory where a slight amount of steam vapor can be tolerated in the area of the deaerating heater. Where this is not possible and it becomes necessary to pipe the vent line to the outside atmosphere, precautions must be taken to avoid consistently long lines with a great number of turns. Horizontal runs should be avoided wherever possible. Trapped pockets in pipe lines must be eliminated if the heater is to operate successfully. The vent plume should be visible to the operator to enable him to periodically check the plume; therefore, avoid piping the vent to stacks, risers, or other closed systems unless provision is made to allow for this periodic inspection.

2.8 Operation of Equipment

After the unit has been completely installed and all equipment has been tested and checked, the following procedures should be followed when commencing operation of a deaerating heater:

CAUTION!: BEFORE OPERATION OF THIS EQUIPMENT, THE USER MUST READ THIS MANUAL, ESPECIALLY THE SECTION CONCERNING SAFETY.

a. The start-up period should be carefully planned so that wastage of water and steam to the drain do not unduly overload existing facilities such as pumps, engines, heaters, etc.
b. Flush out all lines and tanks with water until there is no apparent indication of foreign matter or rust. Spray valves and nozzles should be free of foreign material.
c. Manually check all controls to see that each is working freely and that all shipping stops are removed. Refer to the descriptive literature and operating instructions for proper operation and adjustment of controls, instruments and special equipment.
d. Check to see that all instruments are operating and indicating correctly.
e. Open all vent valves or open orifice bypasses to atmosphere. If orifice plates are not bypassed, remove the orifice plate to allow free venting to atmosphere.
f. Close the outlet valve from the heater to the feed pump.
g. Start the flow of inlet water and slowly increase to 15% to 30% of the design inlet flow rate.

IMPORTANT NOTE: Large industrial and central station deaerators and most scrubber type deaerators which operate from 50 PSIG to 150 PSIG (3.4 BarG to 10.3 BarG) frequently have a design temperature rise (inlet water temperature to outlet water temperature) of up to 150°F (66ºC) Starting up with cold water at high inlet water rates can require steam flows exceeding design limits. This can cause violent pressure fluctuations and possible damage to the internals. The following formula shows the relationship to consider.

$$\frac{Design\ Water\ Rate \times Design\ Temperature\ Rise \times Steam\ Specific\ Volume\ @\ Design}{StartUp\ Water\ Rate \times StartUp\ Temperature\ Rise \times Steam\ Specific\ Volume\ @\ Design} \geq 1$$

h. After making certain that adequate steam pressure is available, open steam valve slowly admitting steam into the deaerator. Expect some rumbling with a cold vessel. Check deaerator pressure gauge and be certain to maintain a positive pressure on the vessel. A proper start-up is not possible with inadequate steam pressure.
i. ***CAUTION!:*** Do not fill the deaerator with steam and then start the water. This will create noise and vibration which can damage the internals of the deaerators. Deaerators not designed for full vacuum can be partially collapsed. Caution is urged even if a vacuum relief valve is installed.

A similar condition can occur where the deaerator sits at idle for a time with steam pressure on the vessel but no water entering a condensate inlet. Since the spray valves are not water tight, the water box will drain and then fill with steam. Where this situation is likely to occur, provisions for flushing the steam from the condensate line and water box with water from the deaerator storage tank or other source (at saturation temperature) prior to condensate return must be provided. If hot water is not available, the unit must be shut down and started as in steps e, f, and g, etc. above.

j. As water moves up to and reaches the operating level, check the operation of the limit switches and inlet controller. Manually, continue water flow and check high level overflow controls.

k. When a strong flow of steam issues from the vents, start throttling back on the vent valves and check storage tank temperatures. The gauge should read 2°F to 3°F (1ºC to 2ºC) below saturation temperature at the existing pressure.

l. Open steam valve full open so that steam pressure control is operating.

m. Throttle back vent valves to operating positions. Install orifice plates if removed. Final vent valve position or orifice plate sizing must be determined in conjunction with oxygen tests during unit operation.

n. Deaerator is now ready for operation. Open outlet to feed pumps.

2.8.1 Recommended Good Practice for Temperature Changes

A deaerator is a direct contact heat exchanger. This type of equipment can be exposed to severe thermal and pressure excursions which can cause damage to the vessel due to stress corrosion, corrosion fatigue and similar phenomena. Cyclic operation is a major contributor to the damage. These practices apply to cyclic and non-cyclic equipment.

To assure long life, the guidelines below should be followed:

a. Changing cold or hot water admission to the waterbox must be accomplished in a controlled manner. The control must assure that rate of temperature change of the metal in the shell or the water box does not exceed 400°F (222ºC) per hour with instantaneous changes not greater than 50°F (28ºC) per minute for total excursion of 150°F (83ºC).

b. Pressure changes in the heater must be gradual. Pressure changes are accompanied by changes in temperature. The change in temperature should not exceed the limitations above.

c. Cold start-up can severely stress a deaerator. It is not unusual to have start-up steam with temperatures of 600°F (315ºC) and higher. To avoid severe thermal shock, it is recommended that cold start-ups be preceded by a warm-up period. The warm-up consists of slowly admitting start-up steam with the vents open and no flow into the water box. The steam flow should be regulated to permit the steel shells to heat at a rate of 50°F (28ºC) per minute up to about 200°F (93ºC). Water in the storage tank should also be heated to the same value. Note that the heating of the storage tank and its water will be much slower than the heater portion of the deaerator.

When the entire vessel and its contents are heated, the steam supply should be shut off and any remaining steam vapor should be vented. Then proceed with the normal start-up.

d. Accelerated cooling is often desirable for repair or maintenance. However, accelerated cooling using cold water can cause thermal shock and equipment damage. Accelerated cooling can be accomplished using a cooling fluid which is 100°F to 150°F (56ºC to 83ºC) lower than the metal temperature until the metal has cooled to about 250°F (121ºC). The rate of change of metal temperature should stay in the 100°F/hr.(56ºC/hr.) range. Once the metal is at or below 250°F (121ºC), cooling water of 60°F to 70°F (16º to 21ºC) may be used.

2.8.2 Hydrostatic Testing

Hydrostatic test pressure may create stresses higher than the equipment design stress. This is not harmful unless hydrostatic tests are performed using very cold water. In general, the hydrostatic tests should be done using the guidelines of the ASME Code, Section VIII, Div. 1, Paragraph UG-99.

2.9 Recommended Procedure for Storage of Pressure Vessels

2.9.1 Internal Preparation

Vapor Absorption - The shell and all carbon steel internal parts are to be blast or power wire brush cleaned and given a protective coating such as Leeder 228. All openings are to be sealed and taped and a vapor absorbing chemical installed in the shell. The normally used absorption chemicals are Silica Gel or activated alumina and are used in quantities of one (l) pound (0.45 Kg) for every 100 cu. ft.(2.8 Cu.M) of vessel.

This method is suited for storage periods of six to twelve months depending upon the environment. Longer periods would require that the chemicals be replaced periodically as the manufacturer recommends.

Nitrogen Blanketing - No internal preparation of the vessel shell is required. This method requires that all openings are tightly sealed, gasketed, and/or welded shut. Nitrogen (or other inert gas) is injected into the shell. The vessel is pressurized to 3 to 5 PSI (0.2 to 0.3 BarG) and all air vented.

Vessels may be stored in any environment for indefinite periods but constant checking of the pressure must be made and the nitrogen cylinders replaced as required.

2.9.2 External Preparation

Application and dry film thickness are to be in accordance with the manufacturer's recommendations for the paint selected. In selecting the type of external preparation, consideration must be given to the environmental conditions and maintenance provisions available. Exposure environments arranged in order of increasing severity are as follows:

A. Dry interior climate or arid regions.
B. Rural or light industrial areas.
C. Frequently wet climates.
D. Continuously wet climates.
E. Corrosive areas.

Paint systems for exposure "A" usually consists of a single coat of Red Oxide Primer.

For the remaining exposures, paint systems would normally consist of one or two coats of rust inhibiting primer and one or two finish coats depending on the severity of the conditions. Before selecting painting systems and materials for exposures "C" through "E", consideration must be given to the specific climate conditions at the storage site.

Where day/night temperature changes exceed 30°F (16.7ºC), special attention should be given to the preparation of the metal surface and selection of the primer paint.

Under these conditions, the metal surfaces should be blast cleaned to remove all mill scale which might otherwise flake off due to expansion and contracting of the vessel.

The type of primer and finish system selected should be compatible with the particular expansion characteristics of the vessel and the final operating temperatures. Suggested Paint Systems are as follows:

	Primer Coat		Finish Coat	
Exposure	**First Coat**	**Second Coat**	**First Coat**	**Second Coat**
A Dry Interior Climate or Arid Regions	Red Oxide	Not Required	Not Required	Not Required
B Rural or light industrial areas	Inorganic Zinc	Not Required	Not Required	Not Required
C Frequently wet climates	Inorganic Zinc	Inorganic Zinc	Not Required	Not Required
D Continuously wet climates	Inorganic Zinc	Inorganic Zinc	Customer Preference	Not Required
E Corrosive areas	Inorganic Zinc	Inorganic Zinc	Customer Preference	Customer Preference

2.9.3 Maintenance Requirements

Short-term Storage (Up to 12 Months)

The absorption material should be checked after three (3) months and then monthly thereafter. Expanded material is replaced as required.

The exterior portions of the shell are to be visually inspected periodically.

Long-term Storage (Over 12 Months)

The inert gas cylinders and vessel must be checked weekly for any loss of pressure and replaced as required.

The exterior portions of the shell are to be visually inspected periodically and the finish repaired as required using the finish paint specified.

2.9.4 Suggested Prime and Finish Coats

Primer Coat

Red Iron Oxide	-	Sherwin-Williams Company
Inorganic Zinc	-	Carboline Corporation

Finish Coat

Polyamide Epoxy	-	Porter Company Zinc-Lock No. 500 Series

Sterling Deaerator Company
4215 NE Port Drive, Suite 100 ♦ Lee's Summit, MO 64064
(816) 795-6010 ♦ FAX (816) 795-6011 ♦ E-Mail: sterling@sterlingdeaerator.com

3. Design Specification

AMATA B. GRIMM POWER (RAYONG) 2 PROJECT SDC JOB: 2011-6049
MABYANGPORN DISTRICT, RAYONG PROVINCE, THAILAND
P.O. NO: V0004413 – PROJECT NO.: 17460 - TAG NO.: 02LAA10BB002
VOGT POWER INTERNATIONAL
LOUISVILLE, KENTUCKY, USA

MODEL NO: 96 VTHS-5237-10Ø1810
ASME SECTION VIII, DIV I

HEATER VESSEL:	**STORAGE VESSEL:**
2438mm OD Heads Diameter	3048 mm OD Heads Diameter
1524 mm Shell Tan-Tan Length	5740 mm Shell Tan-Tan Length
12.7 mm Shell Thickness	12.7 mm Shell Thickness
12.7 mm Head Thickness	12.7 mm Head Thickness
SA-516-70 Head/Shell Material	SA-516-70 Head/Shell Material

Design Pressure (Internal):	100.00 psig FULL VACUUM
Design Temperature (Heater/Storage):	500 ° F (260° C)
Operating Pressure:	17.40 psia (1.22 kg.cm^{2}g)
Operating Temperature:	221° F (105° C)
Outlet Capacity:	264,275 lbs/hr (119,874 kg/hr)
Storage Capacity:	10 Minutes flow from NWL to Low Trip

Oxygen Guarantee: 0.005 ml/l (7 ppb)

Spray Valves:	316-L S.S. / Quantity: 12
Trays:	37" Length / 430 S.S. / Quantity: 80

Reference Drawings:

A-6049-1	*Rev. 0*	*Sterling Nameplate Stamping*
A-6049-2	*Rev. 1*	*HRSG Nameplate for Deaerator*
C-6049-1	*Rev. 3*	*General Notes & Nozzle Schedule*
D-6049-1	*Rev. 0*	*Outline of Deaerator*
6049-BOM	*Rev. 0*	*Bill of Material*

STERLING
DEAERATOR CO.

JOB NO. 6049

NOTE

1) FABRICATOR SHALL STAMP (2) NAMEPLATES AS SHOWN ABOVE.

2) THIS IS NOT THE ASME NAMEPLATE. THE ASME NAMEPLATE SHALL BE SUPPLIED BY THE VESSEL FABRICATOR.

3) ALSO SEE A-6049-2

STERLING NAMEPLATE STAMPING

AMATA CITY II
VOGT POWER INTERNATIONAL
CLIENT P.O. NO.: V0004413

Dwg #	Date	REV.0	DET
A-6049-1	9-14-11	9-14-11	

Drawn By	Checked By	Scale	Approved By
DET	RJA	1" = 1"	SRW

Sterling Deaerator Company
4215 NE Port Dr., Suite 100, Lee's Summit, MO 64064
Phone: (816) 795-6010 Fax: (816) 795-6011
www.sterlingdeaerator.com

INFORMATION ON THIS DOCUMENT IS CONFIDENTIAL OR PROPRIETARY AND SHALL NOT BE USED OR REPRODUCED IN WHOLE OR IN PART WITHOUT WRITTEN AUTHORIZATION OF STERLING DEAERATOR COMPANY. ALL RIGHTS RESERVED.

VPI DWG NO: V17460-

A-6049-01-R0.dwg 1"=1", 9/15/2011 at 11:07am

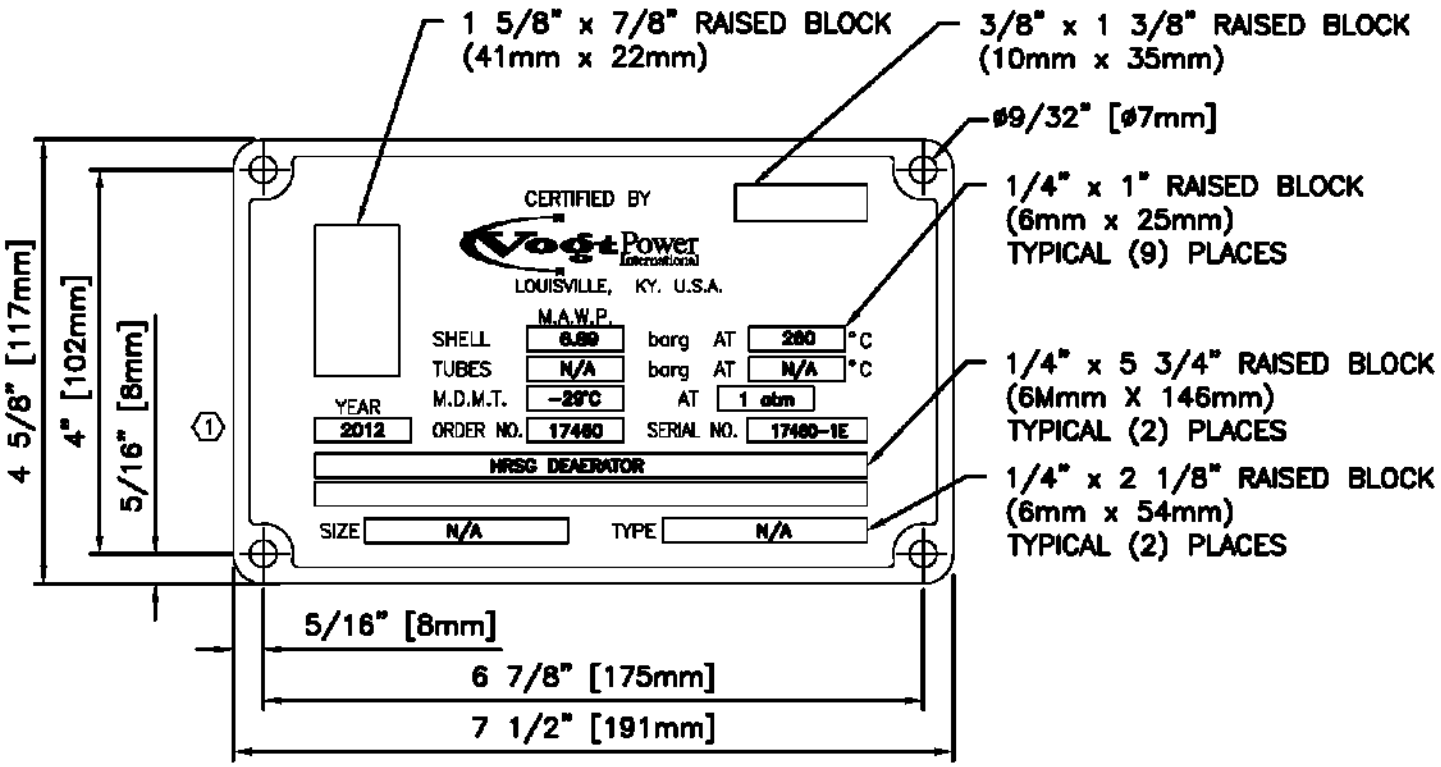

NOTE:

–NAMEPLATE TO HAVE SILVER BLANK BLOCKS WITH BLUE BACKGROUND

MATERIAL:

–20 GA. TYPE 304 S.S. PLATE

HRSG NAME PLATE FOR DEAERATOR

AMATA CITY II
VOGT POWER INTERNATIONAL
CLIENT P.O. NO.: V0004413

Dwg #	Date	REV.1	DET
A-6049-2	9-14-11	1-30-12	

Drawn By	Checked By	Scale	Approved By
DET	RJA	1:2	SRW

Sterling Deaerator Company
4215 NE Port Dr., Suite 100, Lee's Summit, MO 64064
Phone: (816) 795-6010 Fax: (816) 795-6011
www.sterlingdeaerator.com

INFORMATION ON THIS DOCUMENT IS CONFIDENTIAL OR PROPRIETARY AND SHALL NOT BE USED OR REPRODUCED IN WHOLE OR IN PART WITHOUT WRITTEN AUTHORIZATION OF STERLING DEAERATOR COMPANY. ALL RIGHTS RESERVED.

VPI DWG NO: V17460-DAXD-503-00

A-6049-02-R1.dwg 1"=0", 1/30/2012 at 4:31pm

GENERAL NOTES

1) CONSTRUCTION PER ASME SECTION VIII, DIV. 1 2010 EDITION, WITH STAMP.

2) DESIGN:
   - PRESSURE (INT): 7.03 kg/cm²g [100.00 PSIG]
   - PRESSURE (EXT): FULL VACUUM
   - TEMPERATURE: 260.0°C (260.0°C STEAM) [500°F (500°F STEAM)]
   - OPERATING PRESSURE: 1.22 kg/cm²abs [17.40 PSIA]
   - OPERATING TEMPERATURE: 105 °C [221°F]
   - HYDROTEST PRESSURE: 9.14 kg/cm²g [130.00 PSIG]

3) NDE REQUIREMENTS:
   - RADIOGRAPHY:
   - LONG. SEAMS: 100%
   - CIRC. SEAMS: 100%
   - MT OR PT: ON INTERNAL NOZZLE WELDS ONLY

4) CORROSION ALLOWANCE INCLUDED: 3.18 mm [0.125"]

5) HEAD MATERIAL: SA-516-70 SHELL MATERIAL: SA-516-70

6) STRESS RELIEF: 1 STAGE PWHT @ 607°C ± 14°C

7) HEADS: 2:1 ELLIPTICAL

8) ALL MATERIAL FOR NOZZLES SHALL CONFORM TO CUSTOMER SPECIFICATION AND A SUITABLE ASME SPECIFICATION.

9) ANY PIPE FABRICATED FROM ROLLED PLATE SHALL CONFORM DIMENSIONALLY TO CUSTOMER SPECIFICATION AND TO WELDED PIPE SPECIFICATION ASME SA-53

10) SURFACE PREPARATION:
   (INTERNAL) SSPC-SP6 COMMERCIAL BLAST (NO SILICA) W/ WATER SOLUBLE RUST INHIBITOR APPLIED AFTER HYDROTEST.
   (EXTERNAL) SSPC-SP6 COMMERCIAL BLAST WITH ONE COAT CARBOCOAT 150 PRIMER. WELDABLE PRIMER SHALL BE APPLIED ON THE LAST 4" OF EACH BW CONNECTION.

11) UNLESS NOTED OTHERWISE, ALL FLANGE BOLTING SHALL STRADDLE LONGITUDINAL VESSEL CENTERLINES.

12) UNLESS NOTED OTHERWISE, INTERNAL NOZZLE PROJECTION SHALL NOT EXCEED LENGTH REQUIRED FOR NOZZLE REINFORCEMENT.

13) UNLESS NOTED OTHERWISE, ALL PIPING FOR ACCESSORIES SHALL BE SUPPLIED BY OTHERS.

14) UNLESS NOTED OTHERWISE, ALL FOUNDATION AND CONNECTION BOLTING SHALL BE SUPPLIED BY OTHERS. BOLTING BETWEEN TANKS SHALL BE SUPPLIED BY FABRICATOR.

15) UNLESS NOTED OTHERWISE, ALL 3000# RATED NOZZLES SHALL BE FULL COUPLING.

16) UNLESS NOTED OTHERWISE, ALL PIPE FOR NOZZLES SHALL BE ASME SA-106-B.

17) ALL CONNECTIONS SHALL BE SUITABLY PREPARED FOR SHIPMENT TO PREVENT CORROSION OR DAMAGE. HYDROTEST BLANKS SHALL BE REMOVED PRIOR TO SHIPMENT.

18) NO ASBESTOS OR ASBESTOS BEARING MATERIAL IS ALLOWED.

19) NOZZLES SHALL HAVE FULL PENETRATION ATTACHMENT WELDS.

20) FLATBAR 6 x 65 [0.25 x 2.50"] SKIP WELDED TO THE HORIZONTAL CENTERLINE OF STORAGE TANK, WITH RINGS ON EACH HEAD (ø9.5 [0.38"] ROLLED ROD WITH SUPPORTS ON 450 [18"] CENTERS. FOR 65 [2.5"] THICK INSULATION. INSULATION BY OTHERS.

NOZZLE SCHEDULE

MARK	QUAN	NOMINAL SIZE	ENDPREP. /RATING	STYLE	MATERIAL	CUST PIPE SCH.	DESCRIPTION	REMARKS
A	1	8"	DET "A"	BW	304-L-SS	40	CONDENSATE/MAKE-UP INLET	USE CS SAFE END
B	1	14"	DET "A"	BW	C.S.	40	PEGGING STEAM INLET	W/BAFFLE
C	1	3"	150#	RFWN	C.S.	---	VACUUM BREAKER	
D	1	8"	DET "A"	BW	C.S.	40	STORAGE FLASH INLET	W/T BAFFLE
E	1	8"	DET "A"	BW	C.S.	40	HP/LP PUMP SUCTION OUTLET	W/VORT. BRKR.
F	1	3"	DET "A"	BW	304-L-SS	40	VENT	
G	1	3/4"	3000#	SW	C.S.	---	PRESSURE GAUGE	
H	1	3/4"	3000#	SW	C.S.	---	NITROGEN PURGE	
J(1-3)	3	1"	3000#	SW	C.S.	---	TEMPERATURE GAUGE	1 ON DA 2 ON STOR
(1) K	1	1"	3000#	SW	304-L-SS	---	CHEMICAL FEED	W/PLUG
LG(1-2)	2	1 1/2"	3000#	SW	C.S.	---	BRIDLE (LEVEL GUAGE)	
LT(1-6)	6	1"	3000#	SW	C.S.	---	BRIDLE (LEVEL TRANSMITTER)	
P(1-3)	3	2 1/2"	3000#	SW	C.S.	*	HP PUMP RECIRC	W/T BAFFLE
P(4-6)	3	1 1/2"	3000#	SW	C.S.	*	LP PUMP RECIRC	W/T BAFFLE
Q	1	18"	---	FLG'D	C.S.	---	MANWAY (TRAY ACCESS)	W/HINGE
R	1	18"	---	FLG'D	C.S.	---	MANWAY	W/HINGE
S	1	6"	600#	RFSO	C.S.	---	SAFETY VALVE	
U	1	24"	DET "A"	BW	C.S.	---	DOWNCOMER/EQUALIZER	W/BAFFLE
W	1	3"	DET "A"	BW	C.S.	40	DRAIN	FLUSH

* CUSTOMER NOTED PIPE SCHEDULE AS 40

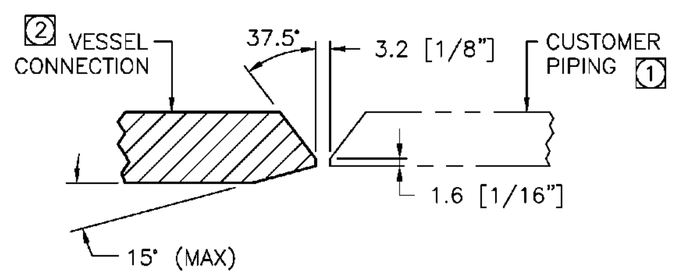

A) B.W. END PREPARATION TO BE IN PLANE WITHIN :
   a) ± 1.2 [3/64"] FOR PIPE SIZES UP TO DN150 [6"] DIA.
   b) ± 2.4 [3/32"] FOR PIPE SIZES OVER DN150 [6"] DIA.
B) BEVELED SURFACES SHALL BE EVEN WITH INDENTATIONS NO GREATER THAN 1/3 CONNECTION WALL THICKNESS. ANGLE OF INDENTATIONS SHOULD NOT BE LESS THAN 120°

(1) SCHEDULE INDICATED ON NOZZLE SCHEDULE.

(2) SHOP MAY SUBSTITUTE HEAVIER WALL PIPE TO MEET ASME CODE CALCULATIONS. ENDS MUST BE PREPARED TO MATCH PIPE SCHEDULE SHOWN IN NOZZLE SCHEDULE.

DETAIL "A"
BW END PREP

REFERENCE: D-6049-1 FOR OUTLINE OF DEAERATOR

GENERAL NOTES & NOZZLE SCHEDULE
161311 kg/hr
355,630 LBS/HR

AMATA CITY 2
VOGT POWER INTERNATIONAL
CLIENT P.O. NO.: V0004413

Dwg #	Date	REV.3	DET
C-6049-1	9-14-11	3-7-12	

Drawn By	Checked By	Scale	Approved By
DET	RJA	1"=1"	SRW

VPI DWG NO: V17460-DAXD-501

Sterling Deaerator Company
4215 NE Port Dr., Suite 100, Lee's Summit, MO 64064
Phone: (816) 795-6010 Fax: (816) 795-6011
www.sterlingdeaerator.com

C-6049-01-R3.dwg 1"-0" = 1"-0", 3/16/2012 at 8:34am

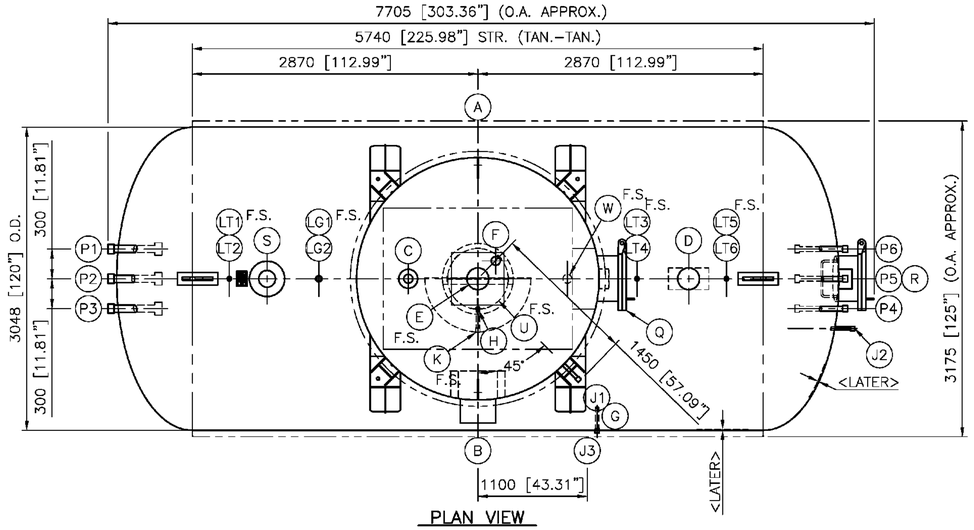

PLAN VIEW

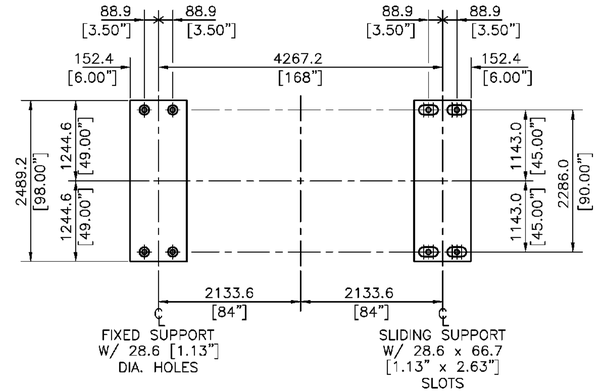

SECTION "A–A"
BOLT SIZE = 25.4 [1.00"] DIA

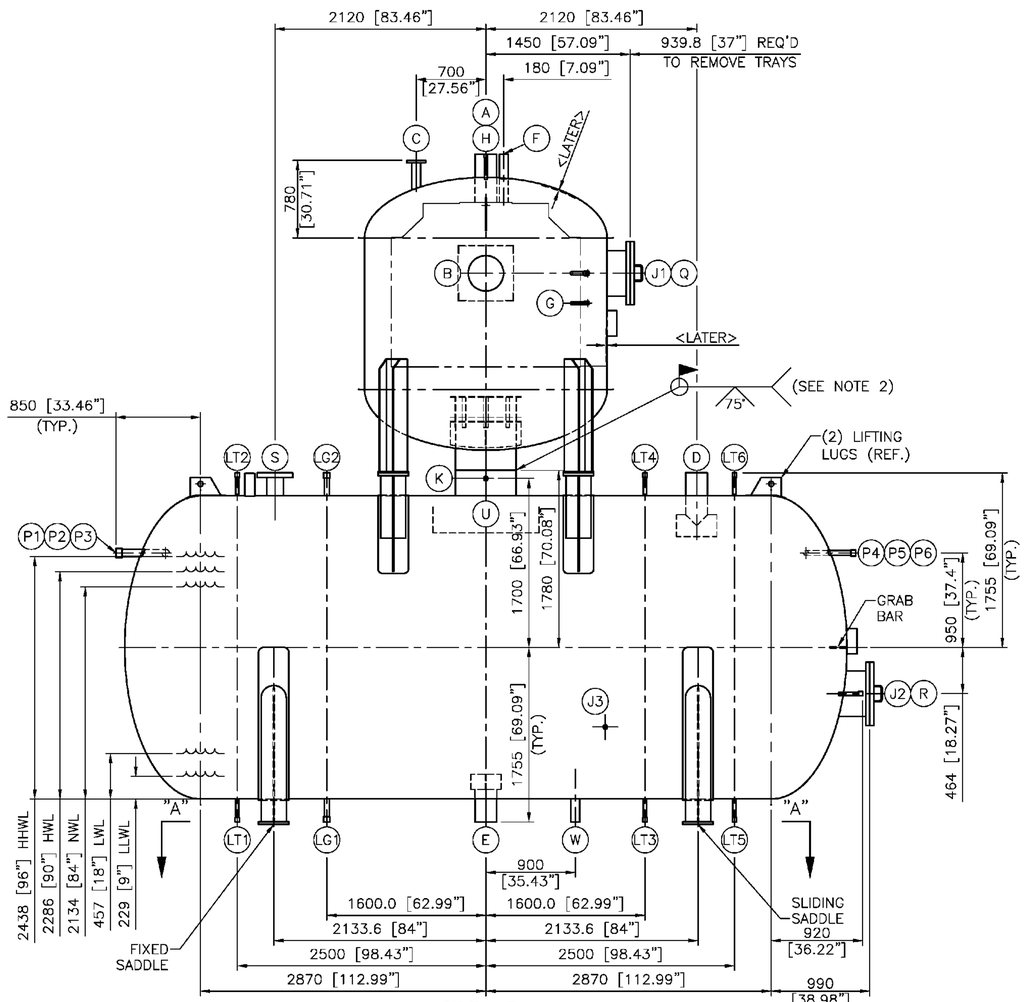

SIDE VIEW

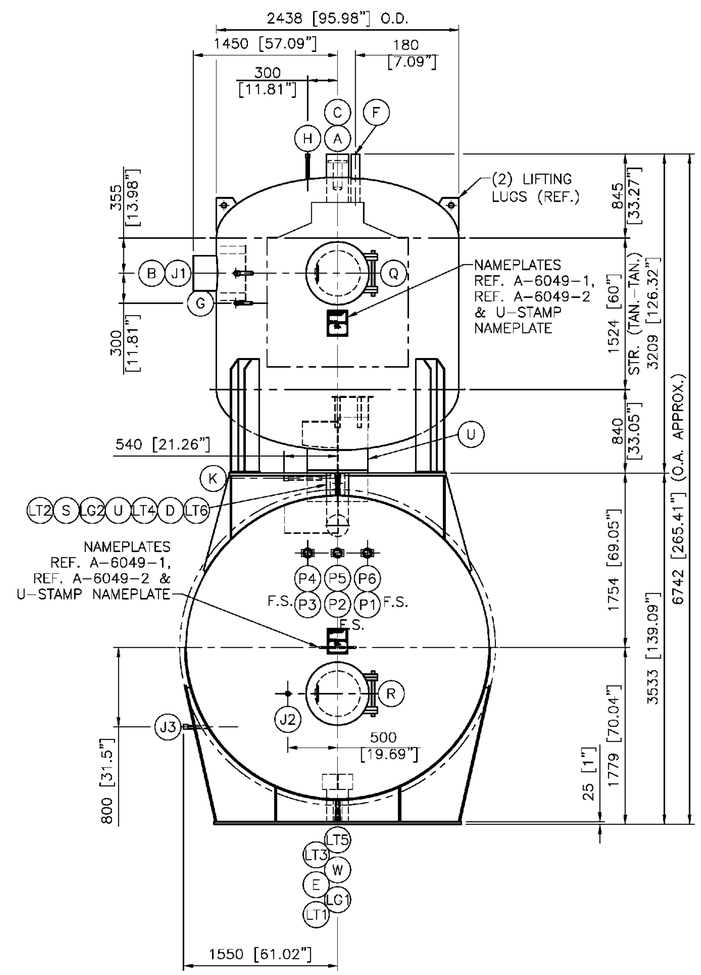

END VIEW

WEIGHTS (Approx.)

EMPTY (HEATER)	4281 kg	[9,438 LBS]
EMPTY (STORAGE)	11426 kg	[25,190 LBS]
OPERATING	51442 kg	[113,408 LBS]
FLOODED	74713 kg	[164,713 LBS]

NOT INCLUDING FORCES AND MOMENTS
FROM CUSTOMERS PIPING SYSTEM, SEISMIC
OR WIND LOADS, OR WEIGHT OF INSULATION

NOTES:

1) VACUUM RING QUANTITY, SIZE AND LOCATION SHALL BE DETERMINED BY FABRICATOR.

2) NOZZLE "U" REQUIRES FIELD WELD BY OTHERS. EXPECT WELD GAP TO VARY FROM 0" TO 1/4".

REFERENCE C–6049–1 FOR GENERAL NOTES AND NOZZLE SCHEDULE.

OUTLINE OF DEAERATOR
161311 kg/hr
[355,630 LBS/HR]

AMATA CITY II
VOCT POWER INTERNATIONAL
CLIENT P.O. NO.: V0004413

Dwg #	Date	REV.0	DET
D–6049–1	9–14–11	9–14–11	
Drawn By: DET	Checked By: RJSA	Scale: 1:30	Approved By: SRW

VPI DWG NO: V17460–

Sterling Deaerator Company
4215 NE Port Dr., Suite 100, Lee's Summit, MO 64064
Phone: (816) 795-6010 Fax: (816) 795-6011
www.sterlingdeaerator.com

D-6049-01-R0.dwg 1"=0" 9/16/2011 at 8:34am

INFORMATION ON THIS DOCUMENT IS CONFIDENTIAL OR PROPRIETARY AND SHALL NOT BE USED OR REPRODUCED IN WHOLE OR IN PART WITHOUT WRITTEN AUTHORIZATION OF STERLING DEAERATOR COMPANY. ALL RIGHTS RESERVED ©.

4. Deaerator Apparatus

4.1 Accessories

The Bill of Material lists all accessories purchased with the deaerator. This could include any of the following: control valves and level controllers, gauge glasses, water thermometers, steam thermometers, steam pressure gauges, oil separators, oxygen test equipment, level or pressure recorders, relief valves, piping, etc. Sterling Deaerator furnishes only that equipment listed on the engineering Bill of Material. For operating any of the accessories or auxiliary equipment supplied with the deaerator, refer to separate instructions in this section, and to the accessory equipment which is contained elsewhere in this manual.

ACCESS

CAUTION: BEFORE ANY ENTRY OR ACCESS TO THIS VESSEL, REFER TO THE SAFETY SECTION OF THIS MANUAL.

Provisions should be made for platforms or ladders so that various valves, controls, and instruments are accessible to the operator. Manholes should be accessible for internal inspection of the equipment.

4.2 Piping Connections

Prior to connecting the deaerating heater to the piping, the heater and storage tank should be bolted firmly to the foundation and the interior should be inspected to ascertain that all interior parts are in position and working order.

When connecting steam and water lines to the heater, care should be exercised in the piping arrangement. Include expansion joints, if necessary, to avoid imposing excessive piping loads upon the shell. Isolating gate valves in these lines are desirable, as they allow for complete isolation for cleaning or repairing, and are bypassed around inlet control valves or steam pressure reducing valves.

Piping should be supported independently to avoid loads from being exerted upon the heater or storage shell or any nozzles.

The pump suction line should be as large as practical and the use of sharp angle bends should be avoided. The line should be as direct to the boiler feed pump suction as possible. Vent piping should be installed with care to avoid any traps or pockets. A vertical line, short as possible, is best. A gate valve should be installed in this line. An alternative to this would be a gate valve

with a pipe cap mounted above the valve. This pipe cap should be drilled with an orifice that will allow sufficient venting. This method is most feasible for a system that would have a fairly uniform amount of noncondensable gasses venting from it. Care must also be taken to avoid closing the gate valve at any time except for maintenance or change of the orifice.

The drain line should be piped to waste and all of the connections made in accordance with the outline drawings using usual piping practice.

Sampling lines should be installed using extreme care to avoid leakage of air into the line. For a full description of the installation of sampling lines, refer to the section under Oxygen Testing.

4.3 Relief Valves

Relief valves, when furnished, are not designed to prevent excess pressure in the steam line. They are designed to relieve excess pressure which might occur in the deaerating heater when steam is flashed from high temperature waters returned to the heater in the form of trapped discharges, condensate returns, etc. These relief valves are sentinel type valves.

Main steam line should be protected external to the deaerating heater to avoid over pressuring from any cause. They must be sized to completely remove any steam formed from pressure reducing stations, or other control devices, which may be installed between the deaerating heater and point of supply. They must also be capable of relieving the complete volume of steam flowing to the deaerating heater.

Normally, the relief valves supplied have a release, and it is recommended that occasionally this release be manipulated to check free movement and to avoid freezing of the valve seat. This can also be opened when starting the deaerating heater to relieve displaced air when filling the unit.

WARNING: THE DISCHARGE FROM THESE VALVES CAN CAUSE SEVERE INJURY. PERSONNEL PROTECTION SHOULD BE INSTALLED BY THE OWNER OR OPERATOR. REFER TO THE SAFETY SECTION OF THIS MANUAL.

4.4 Vacuum Breakers

Vacuum breakers are occasionally supplied to protect shells from external pressure where the vessel has not been designed to withstand this force. When a vacuum breaker opens, there is a definite malfunction within the deaerating heater, as normally this vacuum breaker should never open. It will only open when there is an insufficient supply of steam. Water going to service during these times could conceivably contain dissolved oxygen.

Vacuum breakers which are supplied are steam tight, suitable for the design pressure of the vessel, and are set to open at the slightest vacuum. These should be checked periodically to insure that the seats have not frozen or allowed to become excessively dirty.

4.5 Thermometers

Thermometers are supplied only when ordered and then they are usually of the indicating type. They are installed to indicate the temperature within the storage tank. The thermometer wells are usually of the separable socket type with extension neck and with union connections. It is possible to remove the thermometer for calibration without reducing the pressure in the deaerating heater. For special installations, indicating, remote, or recording, instruments can be supplied. Temperatures external to the heater often supply useful information. This would be the temperature of any water stream coming to the heater, temperature of steam to the heater, and the temperature of the water at the boiler feed pump.

4.6 Pressure Gauges

Pressure gauges are only supplied when ordered and are usually of the bourdon tube type which are used to indicate the steam pressure. A siphon should be installed between the vessel and the gauge to insure accurate reading of the gauge. The gauge is usually installed to indicate steam pressure in the shell of the deaerating heater. On special installations or where specifically required for remote control, indicating or recording pressure gauges can be supplied.

It is often useful to have pressure at sources external to the heater should information ever be required, such as pressure upstream of the inlet control valves, steam header piping and feed pump suction.

4.7 Other Equipment

For a description of the other equipment sometimes furnished with deaerators, such as inlet valves and controllers, overflow valves and controllers, tray banks, spray valves, etc., refer to the appropriate sections of this manual which outline installation and operating procedures to be used.

4.8 Maintenance and Inspection

Normally, deaerating equipment requires relatively minimal maintenance. The operation should be completely automatic. For normal operation, little or no maintenance is required, except for the usual attention required for instrumentation and controls.

Complete annual inspection should be made of this equipment. In plants where duty is unusually severe, or abnormal water supplies are used, inspection should be required semi-annually or more frequently.

CAUTION: BEFORE ANY ENTRY OR ACCESS TO THIS VESSEL FOR INSPECTION PURPOSES, REFER TO THE SAFETY SECTION OF THIS MANUAL.

These inspections should include the following:

a. Internal inspection for evidence of corrosion, scaling, cracking, or broken or worn parts.
b. Spray Valve: Valve must seat firmly. Check the plug for debris. Valve nuts should be tight with no evidence of leakage under gasket. If a disc appears to hang down, the spray valve can easily be adjusted by removing it from the tank, loosening the top hex nut and hand tighten the spring retainer until the valve disc just seats, then turn one-quarter turn more. Tighten top hex nut firmly and reinstall.
c. Spray Nozzle: Should likewise be checked for foreign matter and see that all holes are clean and clear.
d. Check manhole gasket, replace if there is evidence of leaks or deterioration of the gasket.
e. Check operation of all controllers; they should move freely and not have excessive play. Make any necessary adjustments, paying particular attention to the overflow valve and controller as this is not used frequently and may have a tendency to corrode and freeze into position.
f. Open and close all gate valves that have not been used since last inspection. Lubricate when necessary.
g. Recalibrate thermometers, pressure gauges and any other instruments.
h. Inspect insulation.
i. After unit is returned to service, oxygen testing should be performed with more frequency to ascertain that the vent setting is correct.

Sterling Deaerator Company
4215 NE Port Drive, Suite 100 ♦ Lee's Summit, MO 64064
(816) 795-6010 ♦ FAX (816) 795-6011 ♦ E-Mail: sterling@sterlingdeaerator.com

4.9 Bill of Material

AMATA B. GRIMM POWER (RAYONG) 2 PROJECT
MABYANGPORN DISTRICT,
RAYONG PROVINCE, THAILAND

VOGT POWER INTERNATIONAL
LOUISVILLE, KENTUCKY, USA
P.O. NO.: V0004413 ~ PROJECT NO.: 17460
TAG NO.: 02LAA10BB002

STERLING JOB NO.: 2011-6049

Bill of Material
DOCUMENT NO. 6049-BOM
STERLING REVISION: 0

Sterling Deaerator Company
4215 NE Port Drive Suite 100 • Lee's Summit, MO 64064
(816) 795-6010 • FAX (816)795-6011 • www.sterlingdeaerator.com

ITEM	QTY	TAG NO'S	DESCRIPTION	SIZE	DWG	PART NO	MAT'L	SUPPLIED BY	NOTES
1	1	17460-1E 17460-2E	SPRAY-TRAY DEAERATING HEATER HEATER STORAGE OPERATING PRESSURE: 1.22 kg/cm²abs OPERATING TEMPERATURE: 105 ºC STORAGE CAPACITY: 10 minutes flow from NWL to Low Trip OXYGEN GUARANTEE: 0.005 ML/L (7 PPB) CONSTRUCTION CODE: ASME SECT VIII, DIV. 1, 2010 and HEI COMPLIANT DESIGN PRESSURE, INTERNAL / EXTERNAL: 7.03 kg/cm²g/FULL VACUUM DESIGN TEMPERATURE: 260.0°C (260.0°C Steam)	161,311 kg/hr 2,438 mm OD X 1,524 mm (TAN-TAN) 3,048 mm OD X 5,740 mm (TAN-TAN)	D-6049-1 C-6049-1	96 VTHS-5237-10ø1810	SA-516-70	STERLING/ Vesseltech	ALL NUTS/BOLTS AND GASKETS FOR ANY ACCESSORY ITEM (EXCEPT AS LISTED) ARE SUPPLIED BY OTHERS ITEMS LISTED BELOW SHALL BE SHIPPED LOOSE WITH ALL PIPING, EXCEPT AS NOTED, BY OTHERS SEE DETAIL DRAWINGS FOR PIPING INFORMATION
2	12		SDC SPRAY VALVES			PN400	316L SS	STERLING	INSTALLED PRIOR TO SHIPMENT
3	80		SDC 37" LENGTH TRAY ASSEMBLIES	37"L x 11"W x 4"H		PN402-37-SL	430 SS	STERLING	INSTALLED PRIOR TO SHIPMENT
4	2		NAMEPLATE SDC	4" X 7"	A-6049-1		304 SS	STERLING	STERLING DEAERATOR COMPANY
4.5	2		NAMEPLATE VOGT	4" X 7"	A-6049-2		304 SS	STERLING	STERLING DEAERATOR COMPANY
5	2		TAG WARNING MANWAY ENTRY	3" X 5"	SA-113	PN452	304 SS	STERLING	
6	1		TAG WARNING SAFETY VALVE	3" X 5"	SA-114	PN454	304 SS	STERLING	

4.10 Troubleshooting Guide

1. High 0_2

Possible Causes	*Comments or Possible Solutions*
- Air in-leakage	
- Insufficient stabilization period*	
- Trays upset	
- Not steady state conditions*	
- O_2 inlet not in accordance with specified Design conditions	
- Spray valves	- Check for broken spring - Check for worn components or debris
- Water inlet temperature too low	
- Improper venting	- Check vent lines for obstructions and Adequate design
- Incorrect testing	- Loose fittings - Shut scavenger off - Remove chemical interferences
- Operation outside of design conditions	- Verify design conditions

*** Often, high oxygen measurements can be traced to inadequate test procedures. In order to conduct a proper test, it is important that there be a sufficient stabilization period and steady state conditions. The proper length of a stabilization period is extremely dependent on system-specific conditions, particularly the size of the system. As a general rule, if there is a downward trend in oxygen content measurements, steady state condition has not yet been attained.**

2. Excessive Pressure Fluctuation

Possible Causes	*Comments or Possible Solutions*
- Inlet steam pressure too high or too low	
- Excessive inlet temperature variation	- Keep within design range
- Steam PRV Improperly Sized or Calibrated	- Check Size and Calibration

Troubleshooting Guide, Continued

3. Low Outlet Temperature

Possible Causes	*Comments or Possible Solutions*
- Incorrect thermometer reading	- Check calibration
- Insufficient steam flow	- Check steam supply - Check for restrictions
- Incorrect steam/water ratio	- Check heat and mass balances
- Spray valves or internals malfunctioning	- Check spray valves, trays, etc.
- Heater flooding	- Check all valve and control settings
- Inlet flows piped incorrectly	- Check all inlet flows and temperatures

4. Water Hammer

Possible Causes	*Comments or Possible Solutions*
- Inlet flows mixing just prior to deaerator inlet	- Mix flows farther upstream of deaerator
- Improper pipe design	- Check and/or redesign
- High inlet velocities	

5. High CO_2

Possible Causes	*Comments or Possible Solutions*
- High CO2 at inlet	- Verify CO2 design condition
- High pH	- Lower pH
- Improper venting	- Review vent system

6. Tray Upsets

Possible Causes	*Comments or Possible Solutions*
- Tray hold down not secure	- Install correctly
- Flashing	- Gradual increase/decrease of controlled flows

7. Unexpected Storage Tank Level Excursions

Possible Causes	*Comments or Possible Solutions*
- Malfunctioning level control system	- Check setting and system operation
- Malfunctioning overflow or improper boiler feed pump operation	- Check overflow level and boiler feed pump operation
- Pressure fluctuations	

Sterling Deaerator Company
4215 NE Port Drive, Suite 100 ♦ Lee's Summit, MO 64064
(816) 795-6010 ♦ FAX (816) 795-6011 ♦ E-Mail: sterling@sterlingdeaerator.com

4.11 Spare Parts List (Rev. 0)

Ref. Vogt Power Purchase Order	Assembly Description / VPI Tag No.	Vendor Spare Part Description	Vendor Part Number	Recommended Qty. for Start Up	Recommended Qty. for Normal Operation - 2 Yrs.	Normal Lead Time (Wks)	Shelf Life (Yrs)
V0004413	17460-1E	SDC SPRAY VALVES	PN400	0	1	4	5
V0004413	17460-1E	SDC 37" LENGTH TRAY ASSEMBLIES	PN402-37-SL	0	10	4	5
V0004413	17460-1E	18" Round Manway Gasket	PNK18	2	2	4	5

5. Manufacturer's Data Reports

Installation And Operation Manual

SUPERCHANGER®
PLATE & FRAME HEAT EXCHANGER

VOGT POWER INTERNATIONAL
V17460-KBXE-500-00
25-Oct-2011

VOGT POWER INTERNATIONAL	
Released, Work May Proceed	
Hugle, Kathy	Nov-04-2011

www.tranter.com

TRANTER®
The heat transfer people

TABLE OF CONTENTS

EQUIPMENT LOG SHEET 3

IDENTIFYING YOUR SUPERCHANGER® UNIT 3

PLATE DESCRIPTIONAND CONSTRUCTION 4
- Plate Details 5
- Unit Part Numbers 6
- Plate Material and Date of Manufacture Data 7
- Model Nomenclature 8
- Frame Pressure Ratings 8
- Condensed Unit Specifications 9
- Plate Pack Widths 10
- Plate Pack Tightening Dimensions 10
- Plate Designations 11
- Drawings 12
- Element Composition Diagram 12
- Plate Hole Designation for UX, SX, GC and GF Series 13

PASS AND FLOW ARRANGEMENT 14
- Pass Arrangement 14
- Flow Arrangement 14
- Drains 15
- Connecting “C” Frames 17

PLATE STYLES 18
- Drawings 19
- Four-Plate Sequence 20
- Multi-Pass Units 20

GASKET DATA 21
- Gaskets—Glued 21
- Gaskets—Glueless 22
- Gasket Storage Procedures 23
- Mixed Gasket Materials 24
- GX Gluing Codes 26
- GX Start and End Plate Explanations 27

INSTALLATION 28
- Tightening the Plate Pack 29
- Tightening Sequences 30
- Precautions Prior to Start-Up 30

SERVICING 31
- Shutting Down the Unit 31
- Disassembly Procedures 31
- Removal of Plates 31
- Replacing Plates 32
- Replacing Gaskets 32
  - Removing Old Gaskets 32
  - Installing Continuously Glued Gaskets 33
  - Installing Spot-Glued Gaskets 34
  - Installing SUPERLOCK® Snap-In Gaskets 35
  - Installing Teflon Encapsulated Gaskets and Unit Assembly 35
  - Installing Clip-On Gaskets 36
- Steps for Manual Cleaning of Plates 37
- Plate Cleaning Tips 38
- Cleaning-In-Place (CIP) 38
- Back Flushing and Strainers 39
- Cleaning Guidelines 39

TROUBLESHOOTING 40
- Leakage Between the Plate Pack and the Frame 41
- Leakage Between the Nozzle and the End Frame 41
- Leakage Between the Plates to the Outside of the Unit 42
- Mixing of Fluids 42
- Increase in Pressure Drop or a Reduction in Temperature Reading 43
- How to Find a Defective Plate With Through Holes 43

STORAGE PROCEDURES 44

MISCELLANEOUS INSTRUCTIONS 45
- General Maintenance 45
- Ordering Parts 45
- Returned Material 45
- Damaged Shipments 45
- Additional Information 45

AUTHORIZED SERVICE CENTERS 46

EQUIPMENT LOG SHEET

You will need the information shown in the table below whenever you contact the factory for service. Upon delivery of your SUPERCHANGER unit(s), be sure to record the information from the Data Plate on each unit in case the nameplate is destroyed, lost or becomes illegible.

Equipment Tag #	Serial #*	Drawing #*	Model*

* Tranter must have serial or drawing number to properly identify your equipment.

For PHE parts, service or performance ratings, contact one of Tranter's authorized Service Centers (see full information for contacting on page 46).

IDENTIFYING YOUR SUPERCHANGER® UNIT

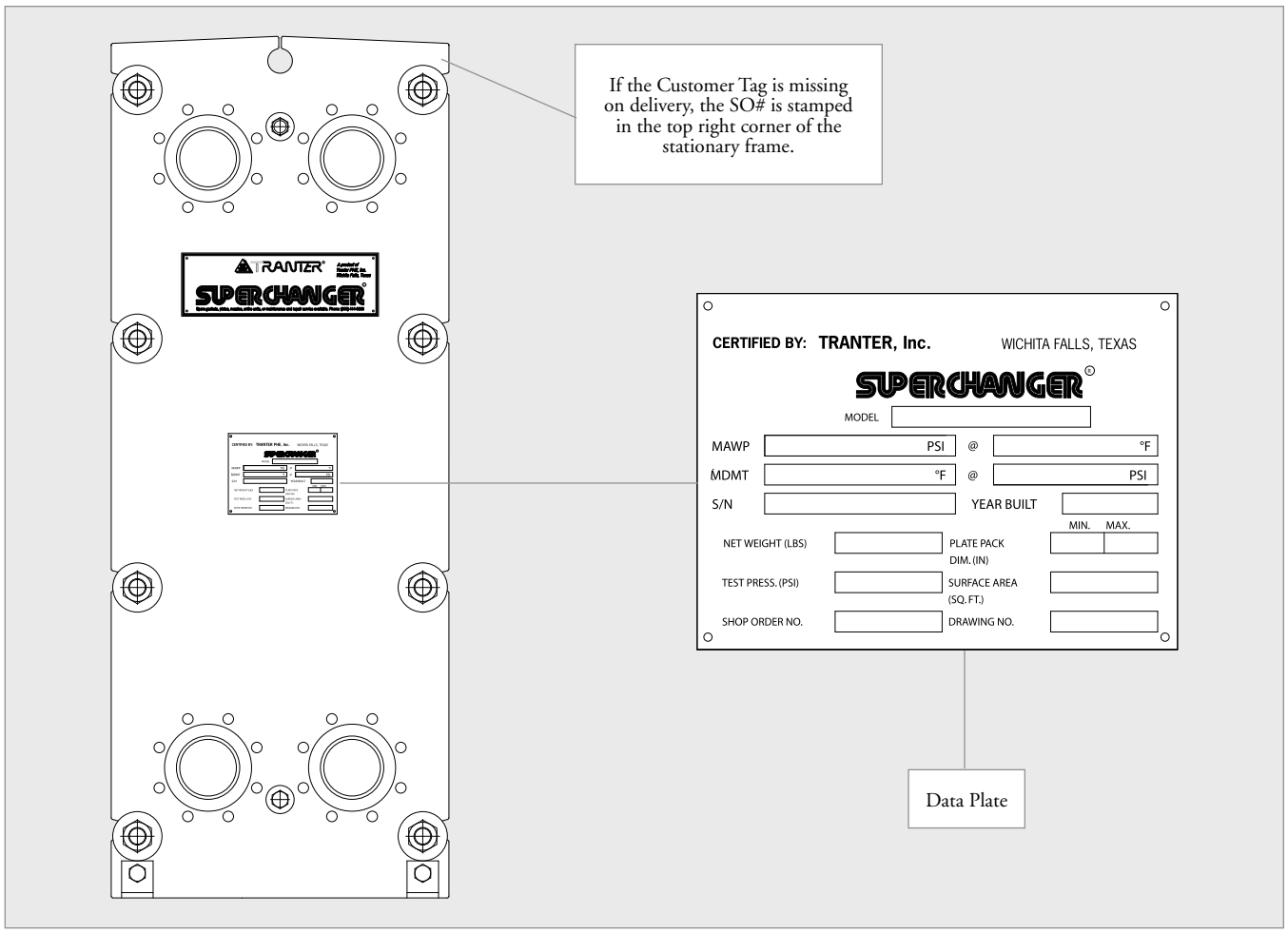

Figure 1
A data plate like the one shown on the picture above is fixed to the stationary frame of the unit and provides the following information. This information is helpful when contacting the factory.

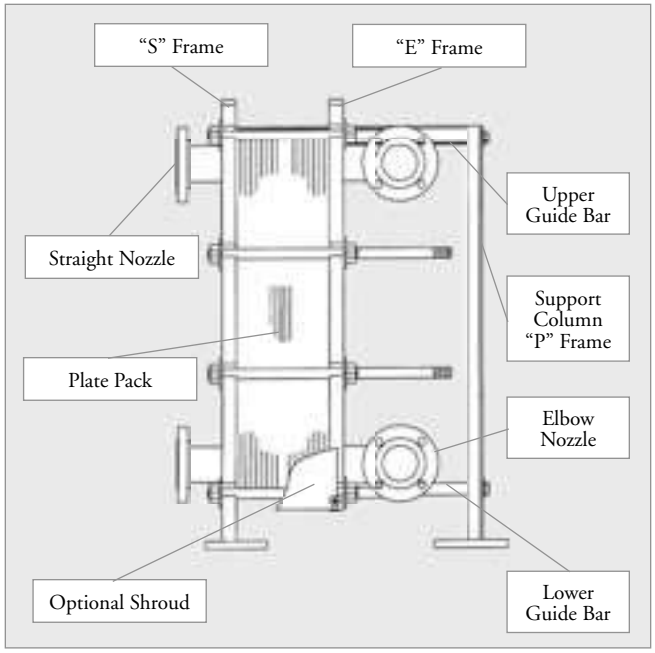

Figure 2
Superchanger Frame, Models HP, UP, SP, MP and FP.

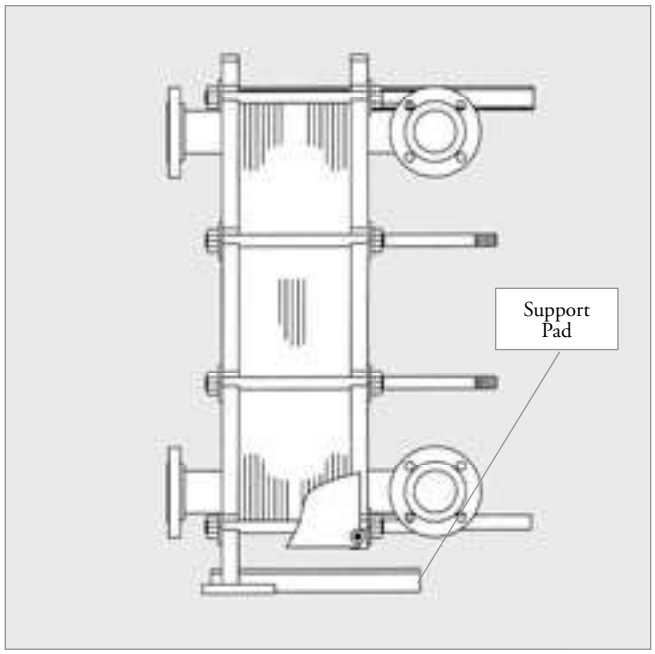

Figure 3
Superchanger Frame, Models HJ, UJ, SJ and MJ.

PLATE DESCRIPTION AND CONSTRUCTION

SUPERCHANGER plate corrugations are available in four patterns. Depending on the applications, the GF, UX, SX, GC and GX Series plates are used to achieve maximum heat transfer.

UX, SX and GC Series plates: Herringbone (chevron) pattern is ideally suited for handling aqueous solutions.

GF Series: Wide gap and parallel (washboard) patterns are designed for applications where there are high viscosity fluids or fluids containing fibers or coarse particles.

GX Series: An asymmetrical four quadrant plate suited for low viscosity and close temperature approach applications or processes involving two vastly different flow rates. It is also well suited for equal flows and close approach.

All plates are manufactured from die-formed sheet metal in virtually any material that can be cold worked, such as stainless steel, titanium, Alloy C-276, Alloy-20, etc. There are grooves around the circumference of the plates which accept the sealing gasket and also add reinforcement because of the ribbed edges. Fluid passage holes are pierced at the corners of each plate. The number and location of the holes is dependent upon the design conditions.

The gaskets are single piece, molded construction, and generally bonded to the plates with Pliobond 30 adhesive. The gasket material is selected for compatibility with the fluids being processed and the operating temperatures.

Each plate also contains flow directors at the top and bottom of the heat transfer surface in the port hole areas, which evenly distribute the fluids. Some plates require a hanger, which attaches the plate to the upper guide bar. For most models, the upper guide bar is the plate's sole support member in the frame, while the lower guide bar serves as an alignment member in all plates except the UXP-005 and the UXP-001, which are supported by the lower guide bar. See Figures 4 through 7 and Tables 1a and 2 for specific models.

Plate Details

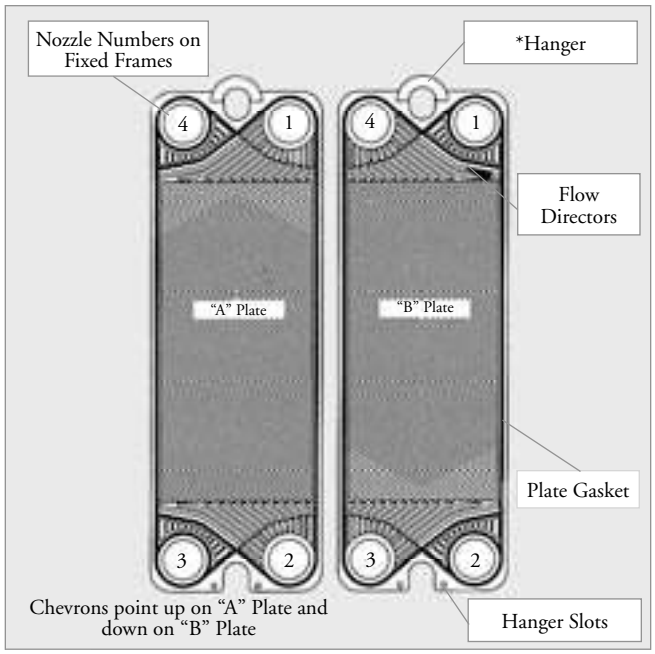

Figure 4
Typical UX, SX or GC Series (herringbone) plate with gasket and hanger. Note that the chevron angle for the herringbone plate can differ on various models.

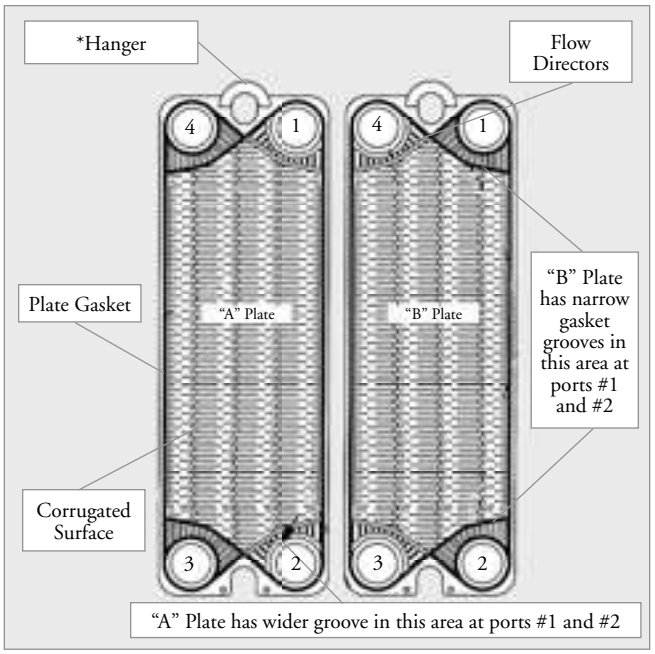

Figure 5
Typical GF Series (washboard) plate with gasket and hanger.

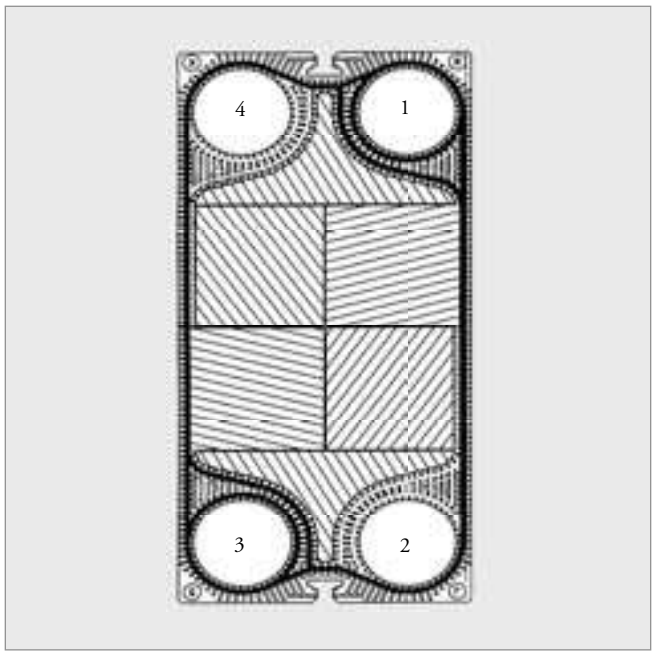

Figure 6
Typical GX plate with gasket. Note that the chevron angle for the herringbone plate can differ on various models.

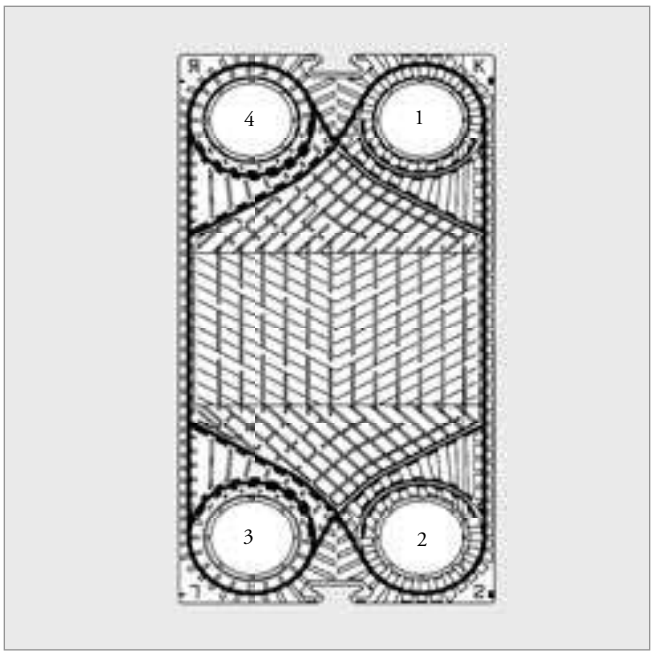

Figure 7
Typical GF (wide gap) plate with gasket.

Unit Part Numbers

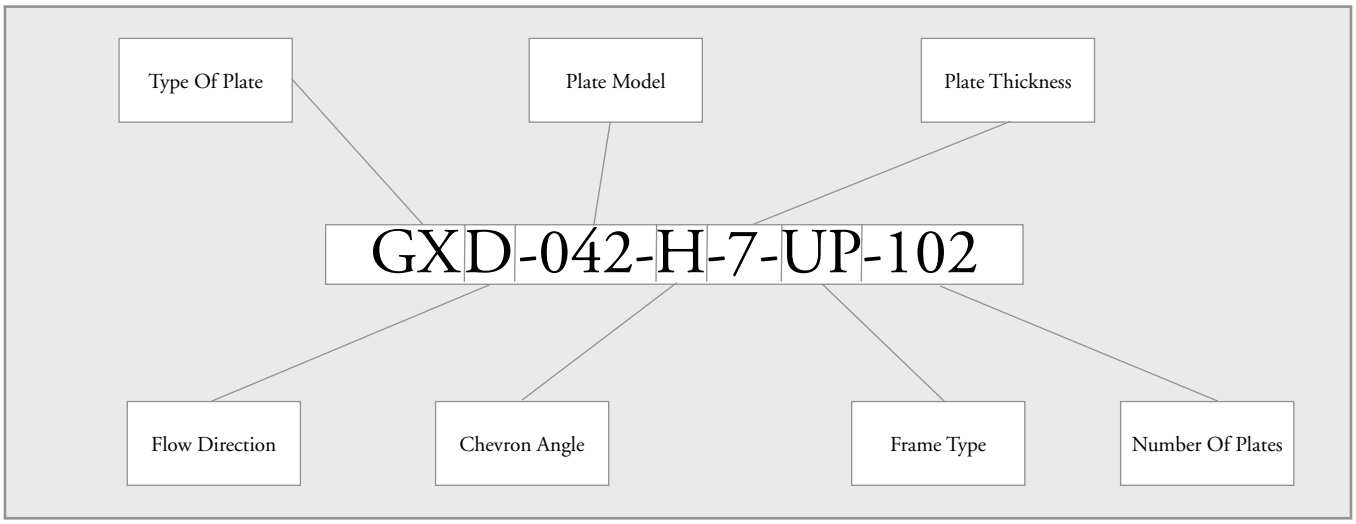

Figure 8
Typical SUPERCHANGER model number, in this case a diagonal flow GX-42 unit with glued gaskets, 0.7 mm thick high-theta plates, a UP frame and 102 plates.

Figure 8 displays a typical SUPERCHANGER unit part number. The first entry represents the plate style (two-letter code) and flow, such as:

GX	Gasketed Ultraflex / Gasket groove in the neutral plane
GC	Gasketed Conventional / Gasket grove in the bottom plane
GD	Gasketed Double Wall
GW	Gasketed Semi Welded
GF	Gasketed Free Flow (Wide Gap and Washboard)
GM	Gasketed Mechanical Glue (Snap-In gaskets)
GL	Gasketed Conventional / Gasket groove in the neutral plane

The second entry (third character) represents the flow; D for diagonal and P for parallel.

The third entry (three-digit code) represents the plate model or surface area.

The fourth entry represents the plate profile angle, or theta:

H (high)
L (low)
M (mixed)
A (30°+45° for UXP-960)
Z (45°+60° for UXP-960)

The fifth entry represents the plate thickness:

5 (0.5 mm)
6 (0.6 mm)
7 (0.7 mm)
8 (0.8 mm)
9 (0.9 mm)
0 (1 mm)

The sixth entry shows the frame type (HP, UP, etc.).

The final entry (three-digit code) represents the plate count.

Plate Material and Date of Manufacture Data

All plates are stamped with identifcation numbers. The numbers are located on both ends of the plates as indicated in the sketches below. The heat number, material and month and year of manufacture can be determined from these numbers.

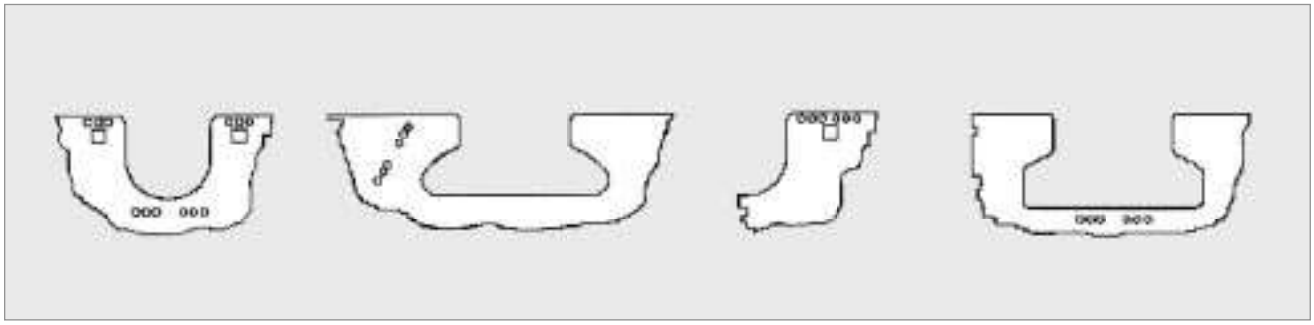

Figure 9
General locations of code stamping for various plate models.

Six-Digit Codes

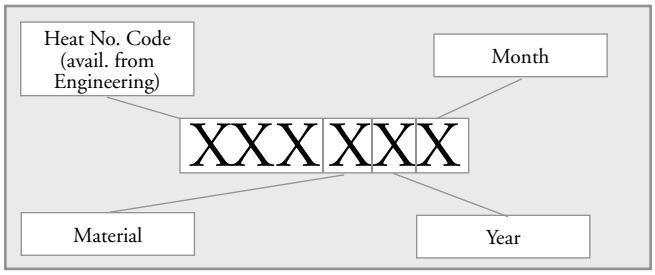

Five-Digit Codes

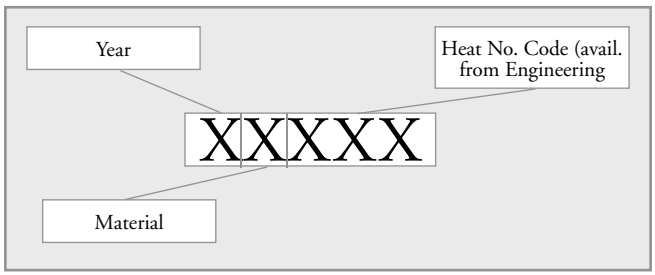

P-Prefix Codes

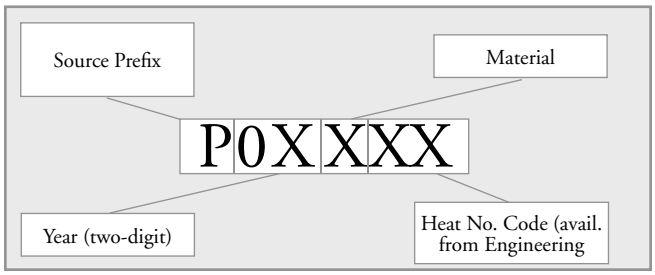

Table 1 Plate Codes

	Six-Digit	Five-Digit or P-Prefix
Material		
0	Other (Nickel, 317 SS, 317L SS, etc.)	AISI 304
1	304 SS	AISI 316
2	316 SS	AISI 316L
3	Titanium	654 SMO
4	316L SS	254 SMO or other SS
5	Hastelloy-C-276	Titanium Grade 1
6	Incolloy 825	Titanium Grade 2
7	Monel 400	Hastelloy-C-276
8	316 High Moly	G-30
9	304L SS	Other materials
Year Of Manufacture		
8 or 08	1998	
9 or 09	1999	
0 or 00	2000	
1 or 01	2001	
2 or 02	2002	
3 or 03	2003	
4 or 04	2004	
5 or 05	2005	
6 or 06	2006	
7 or 07	2007	
Month Of Manufacture		
1	Jan/Feb	NA
2	Mar/Apr	NA
3	May/June	NA
4	July/Aug	NA
5	Sept/Oct	NA
6	Nov/Dec	NA

Model Nomenclature

If your unit was manufactured before July 1, 2002, use Table 1a to determine the current plate style nomenclature for your unit. Note the port numbering has changed to the new design (see page 13).

Table 1a Updated Nomenclature Codes

Old Name	New Name
Glued Gasket Models	
GC-12	GCD-012
GC-30	GCD-030
GC-48	GCD-048
GC-50	GCD-050
GC-26	GCP-026
GC-28	GCP-028
GC-51	GCP-051
GC-60	GCP-060
S3	GFP-030
S8	GFP-080
TW-05	GFP-057
TW-10	GFP-097
TW-18	GFP-187
TD-10	GCD-010
TP-10	GCP-010
GW-81	GWP-081
GW-82	GWP-082
GW-83	GWP-083
WH-040	GWP-400
WX-050	GWP-500
UFX-6/GX-6	GXD-006
GX-7	GXD-007
UFX-12/GX-12	GXD-012
UFX-18/GX-18	GXD-018
UFX-26/GX-26	GXD-026
UFX-37/GX-37	GXD-037
UFX-42/GX-42	GXD-042
UFX-51/GX-51	GXD-051
UFX-60/GX-60	GXD-060
UFX-64/GX-64	GXD-064
UFX-85/GX-85	GXD-085
UFX-91/GX-91	GXD-091
UFX-100/GX-100	GXD-100

Old Name	New Name
Glued Gasket Models	
UFX-118/GX-118	GXD-118
UFX-140/GX-140	GXD-140
UFX-145/GX-145	GXD-145
UFX-180/GX-180	GXD-180
UFX-205/GX-205	GXD-205
UFX-265/GX-265	GXD-265
UFX-325/GX-325	GXD-325
07S	SXP-070
14S	SXP-140
SX41	SXP-400
UX-05	UXP-005
UX-01	UXP-010
06T	UXP-060
UX-10	UXP-100
11T	UXP-110
UX-20	UXP-200
UX-40	UXP-400
UX-81	UXP-801
UX-83	UXP-802
UX-90	UXP-900
LP-80	UXP-960
Snap-In Gaskets	
GC-26	GMP-026
UX-05	UMP-005
UX-01	UMP-010
UX-20	UMP-200
UX-40	UMP-400
06T	UMP-060
TP-10	GMP-010
TD-10	GMD-010
Double Wall	
GX-42	GDD-042
UX-01	UDP-010

Frame Pressure Ratings

Table 1b Frame Pressure Ratings

FRAME TYPE	NOMINAL ASME CODE PRESSURE RATINGS	
	Design Pressure, (psig)	Test Pressure, (psig)
NJ/NP/VJ/VP	Non-code; contact factory	Non-code; contact factory
HJ/HP	100	130
UJ/UP	150	195
SJ/MJ/SP/MP	300	390
FP	350	455

Standard unit pressure ratings are shown. Contact the factory for higher design pressures, up to 400 psig, depending upon the application.

Condensed Unit Specifications

Table 2 Condensed Unit Specifications

	Nominal Frame Dimensions				Channel Volume Between Plates (gal)		
Model	Height (in.)	Width (in.)	Connection (in.)	Max. Flow (gpm)	Wide	Medium	Narrow
GXD-007	37	8-1/4	1	75	NA	0.0423	NA
GXD-012	39	14	2	292	NA	0.0872	NA
GXD-018	48	14	2	292	NA	0.124	NA
GXD-026	54	22	2, 4	1171	NA	0.227	NA
GXD-042	71	22	2, 4	1171	NA	0.351	NA
GXD-051	72	27	4, 6	2264	NA	0.444	NA
GXD-037	60	27	4, 6	2769	NA	0.246	NA
GXD-064	79	27	4, 6	2769	NA	0.423	NA
GXD-091	98	27	4, 6	2769	NA	0.6	NA
GXD-118	117	27	4, 6	2769	NA	0.777	NA
GXD-060	69	38	4, 6, 8	4755	NA	0.502	NA
GXD-100	92	38	4, 6, 8	4755	NA	0.845	NA
GXD-140	115	38	4, 6, 8	4755	NA	1.162	NA
GXD-180	138	38	4, 6, 8	4755	NA	1.479	NA
GXD-085	81	50	10, 12, 14	10471	NA	0.88	NA
GXD-145	104	50	10, 12, 14	10471	NA	1.334	NA
GXD-205	127	50	10, 12, 14	10471	NA	1.788	NA
GXD-265	149	50	10, 12, 14	9183	NA	2.243	NA
GXD-325	172	50	10, 12, 14	9183	NA	2.695	NA
UXP-005	24	12	1, 2	265	NA	0.06	NA
UXP-010	31	12	1, 2	292	NA	0.08	NA
UXP-100	45	17	2, 3	520	NA	0.13	NA
GFP-030	58	22	2, 3, 4	1060	NA	0.4	NA
UXP-200	62	24	2, 3, 4	1060	NA	0.34	NA
UXP-060	74	32	4, 6, 8	3825	NA	0.67	NA
SXP-070	71	36	4, 6, 8	4754	NA	0.52	NA
GFP-080	85	30	4, 6, 8	3450	NA	0.9	NA
UXP-400	85	32	4, 6, 8	3825	NA	0.87	NA
SXP-400	83	36	4, 6, 8	4754	NA	0.63	NA
UXP-110	106	32	4, 6, 8	3825	NA	1.21	NA
SXP-140	103	36	4, 6, 8	4754	NA	0.81	NA
UXP-801	105	54	10, 12, 14	11200	NA	2.40	NA
GCP-010	38	13	1, 2	292	NA	0.1135	NA
GCP-016	39	14	2, 5	292	NA	0.063	NA
GCP-026	54	22	2, 3, 4	1171	NA	0.2642	NA
GCP-028	31	7	1	75	NA	0.4	NA
GCP-051	72	27	4, 6	2324	NA	0.55	NA
GCP-060	69	38	4, 6, 8	4755	NA	0.783	NA
GFP-057	71	35	4, 6, 8	4755	2.36	2	1.63
GFP-097	88	35	4, 6, 8	4755	3.23	2.61	1.99
GFP-187	126	35	4, 6, 8	4755	5.08	3.92	2.76
GLP/GLD-013	39	14	2.5	475	NA	0.087	NA
GL-230	121	66	20	23465	NA	3.33	NA
GL-330	145	66	20	23465	NA	3.78	NA
GL-430	169	66	20	23465	NA	4.65	NA

Plate Pack Widths

"A" Dimension for standard thickness materials

Calculating the "A" dimension (Plate Pack Width in Inches) for various SUPERCHANGER Models can be accomplished by using the formulas indicated in Table 3. N = Number of Plates.

PLATE DESIGNATION, p	PLATE THICKNESS, t
4	0.015748
5	0.019685
6	0.023622
7	0.027559
8	0.031496
0	0.039370

N = Number of Plates
p = Plate Thickness Designation
t = Plate Thickness in Inches

Please contact Tranter for the "A" Dimension when other plate thicknesses are involved.

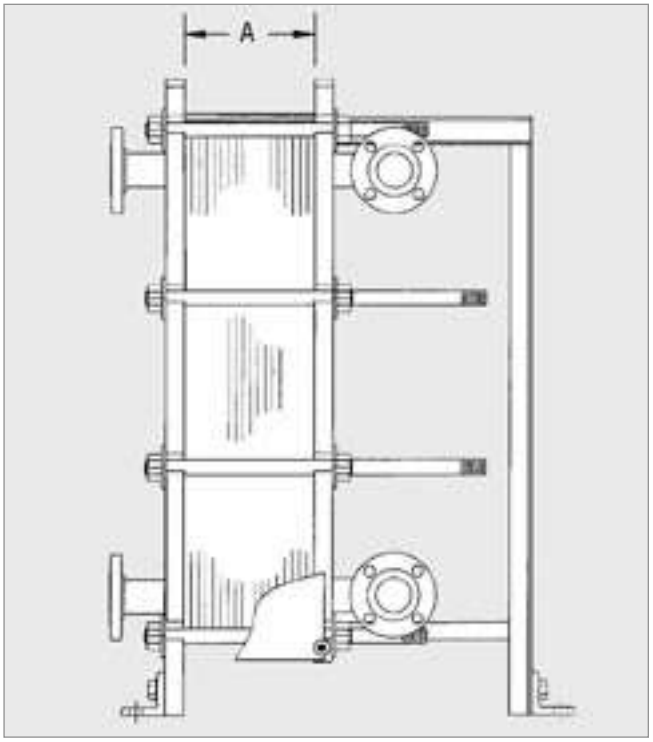

Figure 10
Plate thicknesses.

Plate Pack Tightening Dimensions

Table 3 Plate Pack Tightening Dimensions

Plate Type	A Max.* (in.)	A Min.* (in.)
UXP-005	(t + 0.102362) N	(t + 0.094488) N
UXP-010	(t + 0.102362) N	(t + 0.094488) N
UXP-100	(t + 0.0944) N	(t + 0.0866) N
UXP-200	(t + 0.108268) N	(t + 0.102362) N
UXP-060	(t + 0.141732) N	(t + 0.133858) N
UXP-400	(t + 0.141732) N	(t + 0.133858) N
UXP-110	(t + 0.141732) N	(t + 0.133858) N
SXP-070, SXP-400, SXP-140	(t + 0.102362) N	(t + 0.094488) N
UXP-801	(t + 0.181102) N	(t + 0.173228) N
UXP-802	(t + 0.181102) N	(t + 0.173228) N
GFP-030	(0.1881N) + 0.07874	(0.1767N) + 0.07874
GFP-080	(0.189013N) + 0.07874	(0.1796N) + 0.07874
GXD-007	(t + 0.10191) N	(t + 0.09491) N
GXD-012, GXD-018, GL-013	(t + 0.11821) N	(t + 0.11021) N

Plate Type	A Max.* (in.)	A Min.* (in.)
GXD-026, GXD-042	(t + 0.13441) N	(t + 0.12541) N
GXD-037, -064, -091, -118	(t + 0.11821) N	(t + 0.11021) N
GXD-051	(t + 0.13441) N	(t + 0.12541) N
GXD-060, -100, -140, -180	(t + 0.13441) N	(t + 0.12541) N
GXD-085, -145, -205, -265, -325	(t + 0.13441) N	(t + 0.12541) N
GFP-057, -097, -187	(t + 0.2965) N	(t + 0.3025) N
GCP-010	(t + 0.1378) N	(t + 0.1299) N
GCP-016	(t + 0.07205) N	(t + 0.06969) N
GCP-026	(t + 0.1633) N	(t + 0.1523) N
GCP-051	(t + 0.1601) N	(t + 0.1548) N
GCP-060	(t + 0.1790) N	(t + 0.1676) N
GCD-012	(t + 0.1000) N	(t + 0.09685) N
GLD-230, -330, -430	(t + 0.1831) N	(t + 0.1713) N

*Applicable to units with elastomeric gaskets, round off to the nearest 1/32 in. Units with teflon encapsulated gaskets should be tightened to the "A Max." formula.

The single digit of the model number given just before the frame designation indicates the plate thickness in tenths of a millimeter. The only exception is the zero (0) designation, which indicates a 1.0 mm plate thickness.

HOW TO USE TABLE 3:
EXAMPLE: Given a model UXP-100-L-6-MP-32, go to thePlate Pack Width chart above and select Plate Designation 6, the Plate Designation for a model UXP-100. The corresponding Plate Thickness is 0.023622 in. Now find the Plate Type row showing UXP-100 in Table 3. The "A Max." dimension is calculated by: (t+.0.0944)N = (0.023622+0.0944)32 = 3.78 in. The "A Min." dimension is calculated in a similar manner. Round off calculated number to nearest 1/32 in.

CAUTION: On units operating in excess of 200 psig, the tightening dimension is to equal or approach the minimum dimension.

Plate Designations

SUPERCHANGER units are designed so that a fluid which enters the "A" plate circuit (nozzles S1, S2, M1 or M2) always flows in the "A" circuit only. Fluid which enters the "B" plate circuit (nozzles S3, S4, M3 or M4) always flows in the "B" circuit only. Facing the stationary frame, the right side is always the "A" side, while the left side is always the "B" side. The "A" and "B" term refers to the gasket orientation. When looking at the gasketed side of the plate, an "A" plate becomes a "B" plate when reversed (turned upside down). If the flow comes in and out on the left side, it is a "B" orientation.

NOTE: Every other plate has to be rotated 180° A-B-A-B in order to prevent mixing. The first plate in the unit is called a "D" plate and has a special gasket arrangement. This arrangement keeps the flow from contacting the stationary frame. The last is called the "E" plate and is gasketed normally.

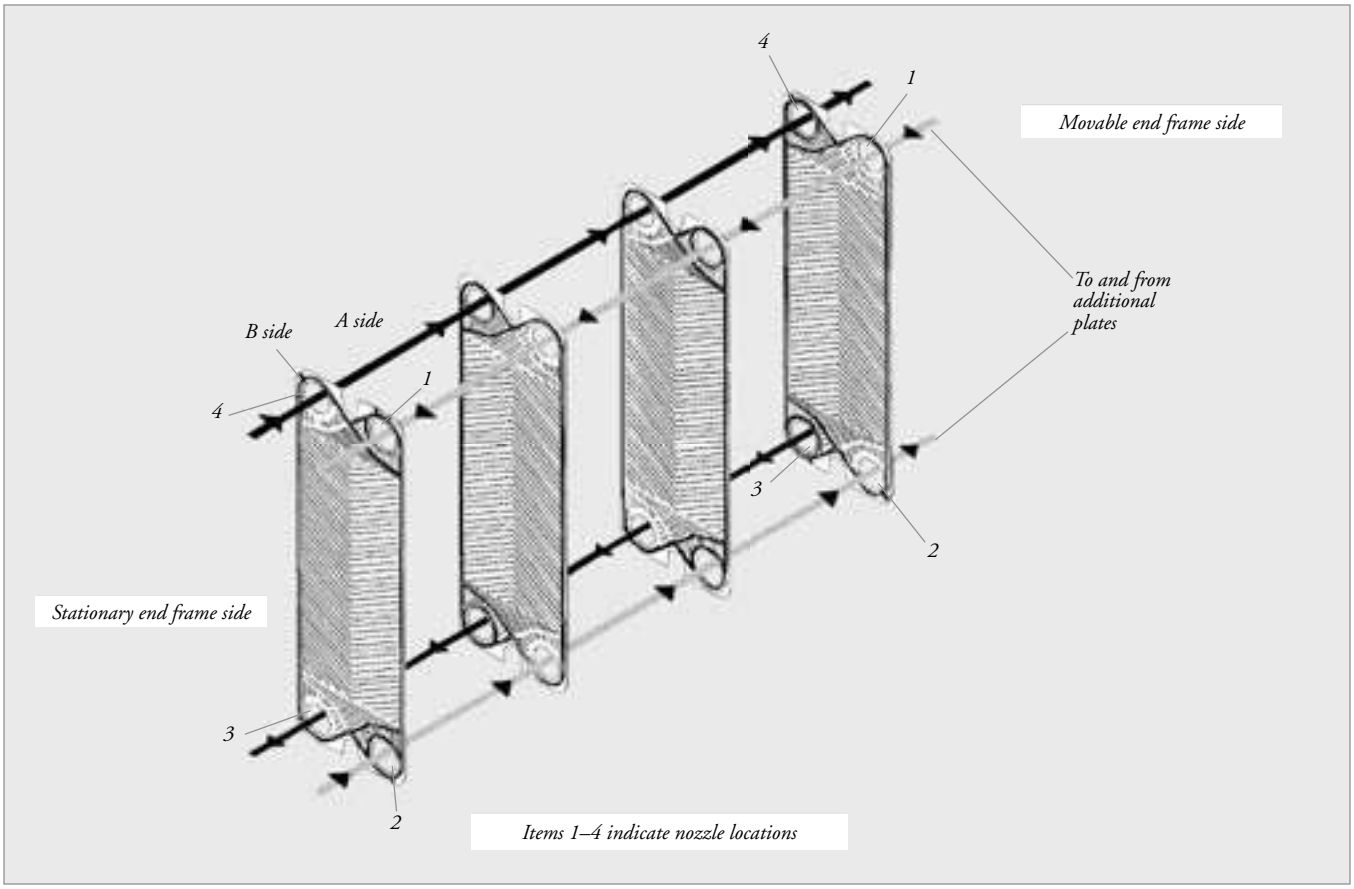

Figure 11
Plate orientation for the UX, SX, GC and GF Series.

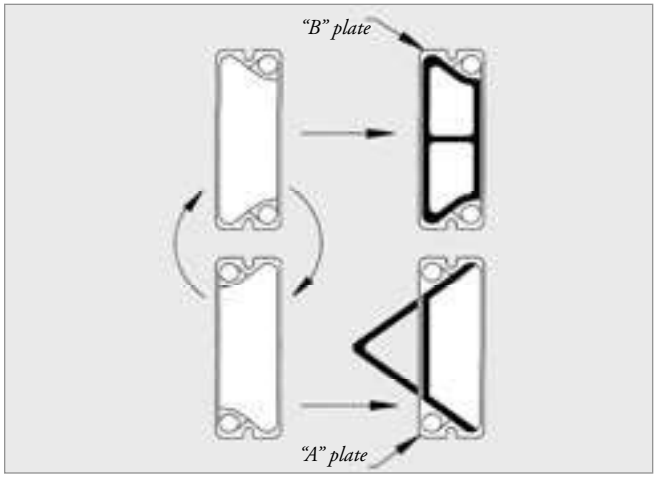

Figure 12
Gasket orientation.

Drawings

SUPERCHANGER units are custom designed for each application. A drawing is supplied with each unit depicting all required dimensional data, equipment specifications, unit performance, nozzle locations and sequence of plates in the heat exchanger. Most information contained on the drawing is self-explanatory. However, sections illustrating the internal functions of a plate and frame heat exchanger are sometimes difficult to interpret. The following diagrams are aids for understanding the equipment.

Element Composition Diagram

Figure 13 shows an "S" frame (stationary member), "E" frame (moveable member) and plates of the plate heat exchanger depicted in an element composition diagram. In an element composition diagram, "B" plates are located at the upper part of the drawing and "A" plates are shown on the lower side.

A plate is indicated by the line centrally located within a rectangular compartment between the "S" and "E" frames.

The designation of plate holes is written in the hole designation box formed by extending the vertical plate lines above the center line for "B" plates and below the center line for "A" plates. The plate sequence number is written in a box above and below the plate hole number, respectively, for "B" and "A" plates.

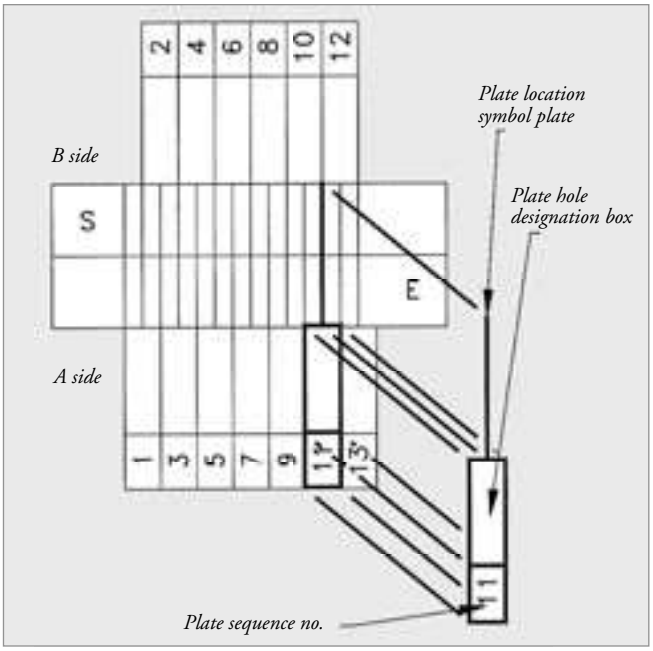

Figure 13
Element composition diagram.

Plate Hole Designation for UX, SX, GC and GF Series

As shown in Figure 14, the pierced holes at the corners of the plate are designated as: 1 for upper right, 2 for lower right, 3 for lower left and 4 for upper left when facing the gasketed side of the plate. Plates 1 and 2 in Figure 14 are represented as A1234 and B1234 respectively. Plates with all four holes pierced can also be designated with a blank space or an *. Unpierced ports will be represented as a zero (0). For example, Plate 3 is represented by a A1004 since there are no holes at position 2 and 3. Table 8 shows **A and B equivalents when an "A" plate is rotated to become a "B" plate.**

Make sure the gaskets are installed correctly in relation to the flow directors. (See Figures 15 and 16.)

Table 4 "A" and "B" Equivalents

"A" Plate	"B" Plate	"A" Plate	"B" Plate
1234	1234	0204	0204
1034	1230	0034	1200
1204	0234	1200	0034
0234	1204	0004	0200
1230	1034	1000	0030
1004	0230	0030	1000
0230	1004	0200	0004
1030	1030	0000	0000

Porthole designations shown apply to all units purchased after June 1, 2002. Refer to unit drawing or previous IOM (SC-10M-9) for older UX, SX, S, GF or TW Series.

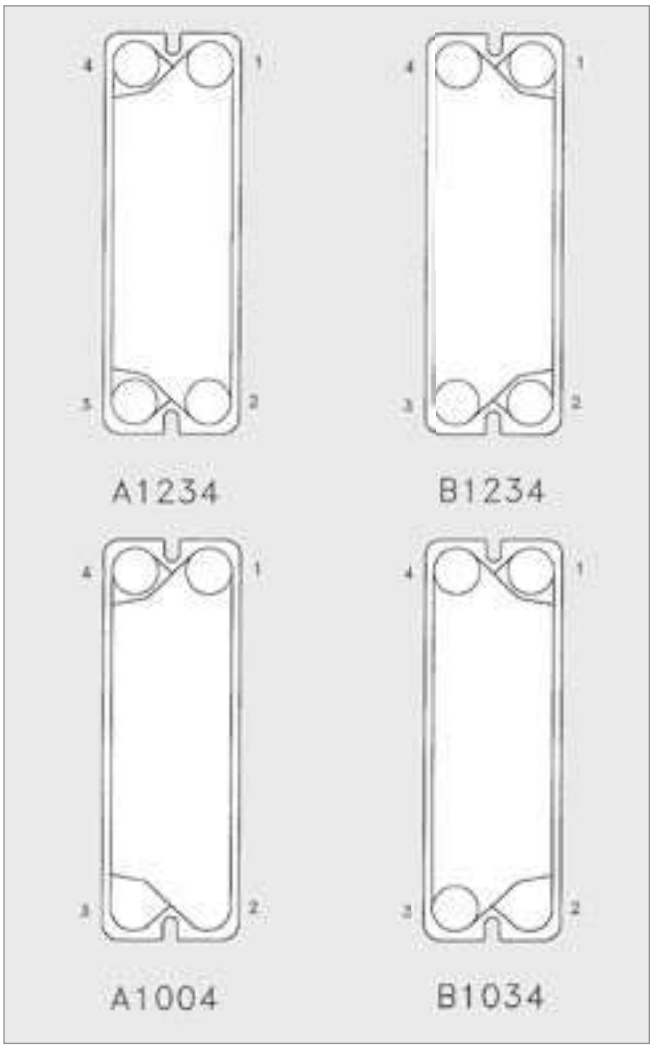

Figure 14
Hole designations.

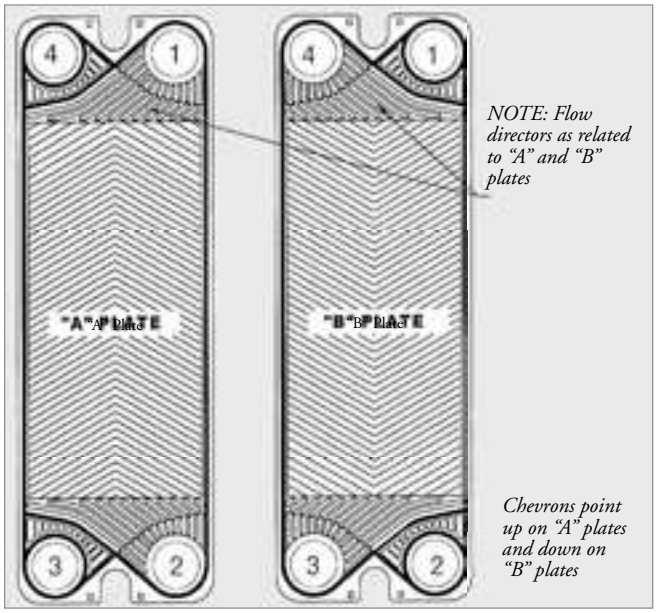

Figure 15
Correct gasket location.

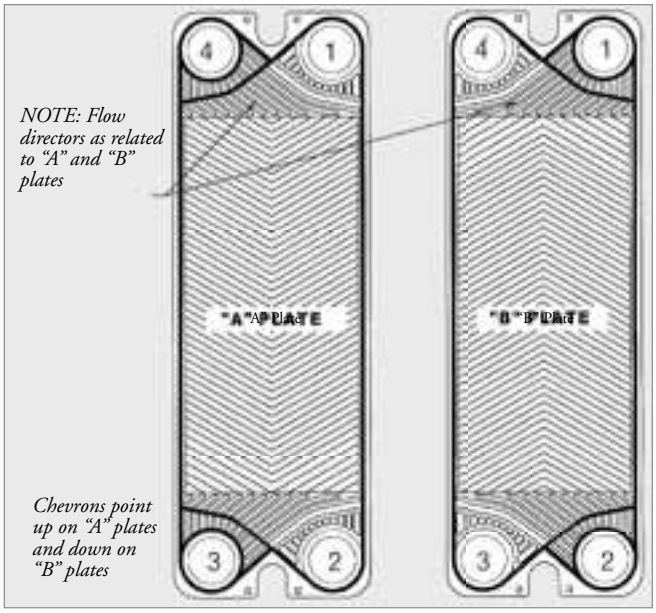

Figure 16
Incorrect gasket location.

PASS AND FLOW ARRANGEMENT

Pass Arrangement

Positions 1 and 4, as shown above in Figure 17, are upper connections, right and left respectively, and positions 2 and 3 are lower connections, right and left respectively. Each vertical line in between the "S" and "E" members represents a heat transfer plate while the arrows show the directions of flow in the channels between two plates and in the port holes.

The position of a plate hole is indicated by the intersection between a vertical line representing the plate and a horizontal line indicating the flow direction and passage. Holes for passage of fluid flowing on the surface of a "B" plate are always located on the left side (Holes 3 and 4), and holes for passage of liquid flowing on the surface of an "A" plate are always found on the right side (Holes 1 and 2).

In the element composition diagram (Figure 17), plate numbers are shown in boxes as:

1	D1004	("A" side)

1034	2	("B" side")

"D" in D1004 represents the plate adjacent to the "S" frame. "D" also denotes that no fluid runs on the heating surface.

A box with no port hole numbers, | 11 | | , in Figure 17 means | 11 | 1234 |. This is done for simplicity as most plates in a unit have four holes.

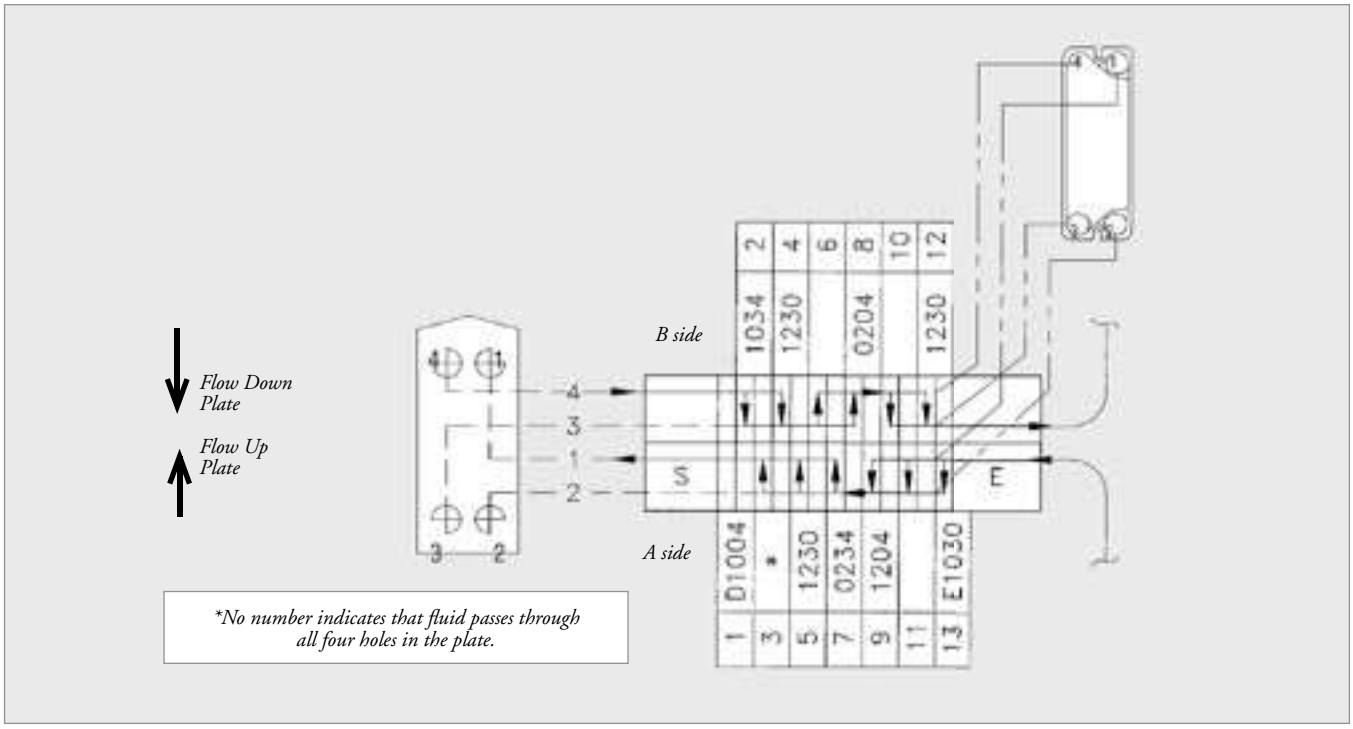

Figure 17
Element composition diagram.

Flow Arrangement

Figure 18 shows the plate arrangement in which "B" side is arranged in two parallel channels with three passes in series and "A" side is arranged in three parallel channels with two passes in series. In two parallel channels with three passes in series, the fluid flow Q_1 flows on the heating surfaces of two plates separately ($Q_1/2$) and gathers again in the port hole. This operation is repeated three times. In the case of three parallel channels, with two passes in series, flow Q_2 similarly flows on the three heating surfaces separately ($Q_2/3$), gathering once again in the port hole.

The product of the number of channels in parallel, times the number of passes in series, is always equal or different from each other by one plate when comparing "A" side with "B" side. The total number of plates can be obtained by adding the number of "D" plates to the number gained by adding the products of "A" side and "B" side. In Figure 18 (2 x 3) + (3 x 2) + 1 = 13.

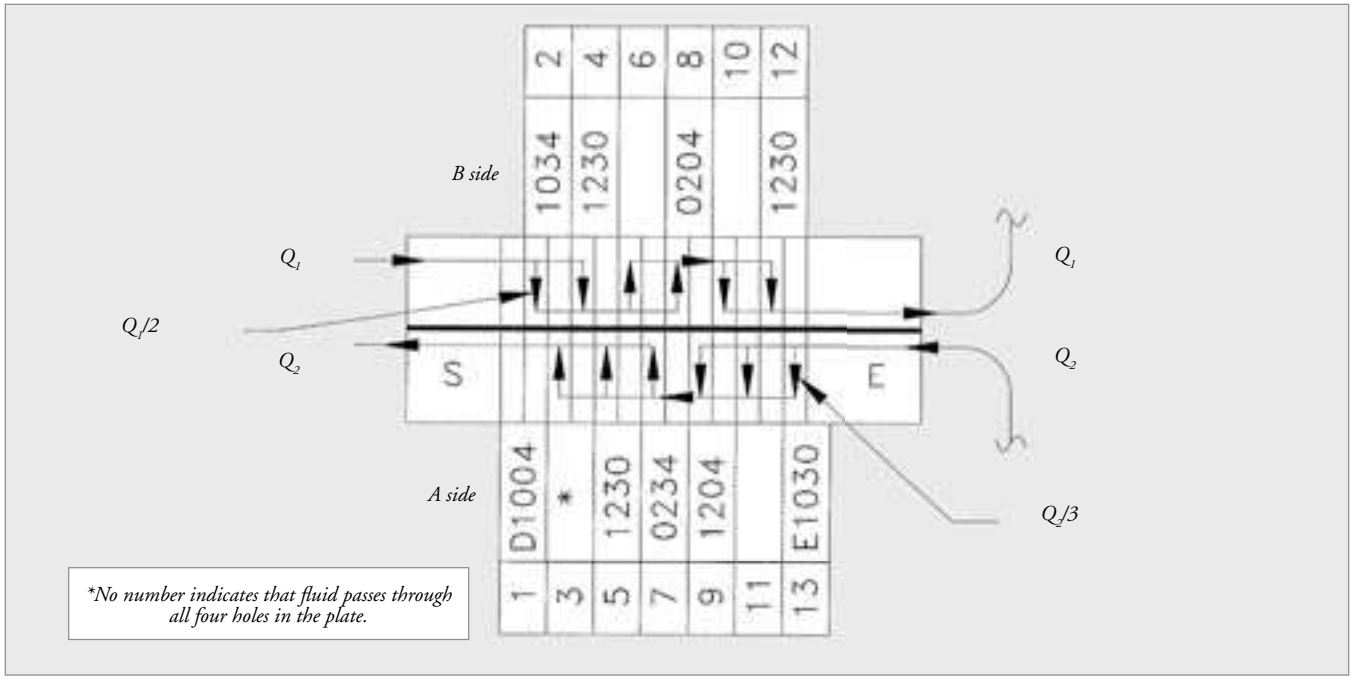

Figure 18
Flow arrangement.

Drains

There are three methods used for draining SUPERCHANGER units:

1. One pass/one pass (also two pass/two pass with all lower nozzles, but not shown) units can be drained by opening the piping to the lower nozzles or by opening drain valves that can be provided in the field in the connecting piping. See Figure 19.

2. Multi-pass units may require factory installed drains, i.e., an additional nozzle in the end frame. **These must be factory installed. See Figure 19.**

3. If the number of passes is greater than four as in Figure 20, the above options require the addition of small holes in plate corner sections as shown in Figure 22. The amount of by-pass through these holes is negligible and there is no possibility of fluid intermix. These drain holes in the element composition diagram (Figure 21) are noted by ●, as the small hole is always placed in the corner without a passage hole. For example, 1204 is changed to 12●4 if a drain hole is present. The size and position of the drain hole is separately specified.

NOTE: On multi-pass units that are sized for a close temperature approach, these drain holes are not provided due to the small amount of bypassing that occurs. Check the drawing to determine whether drains are present.

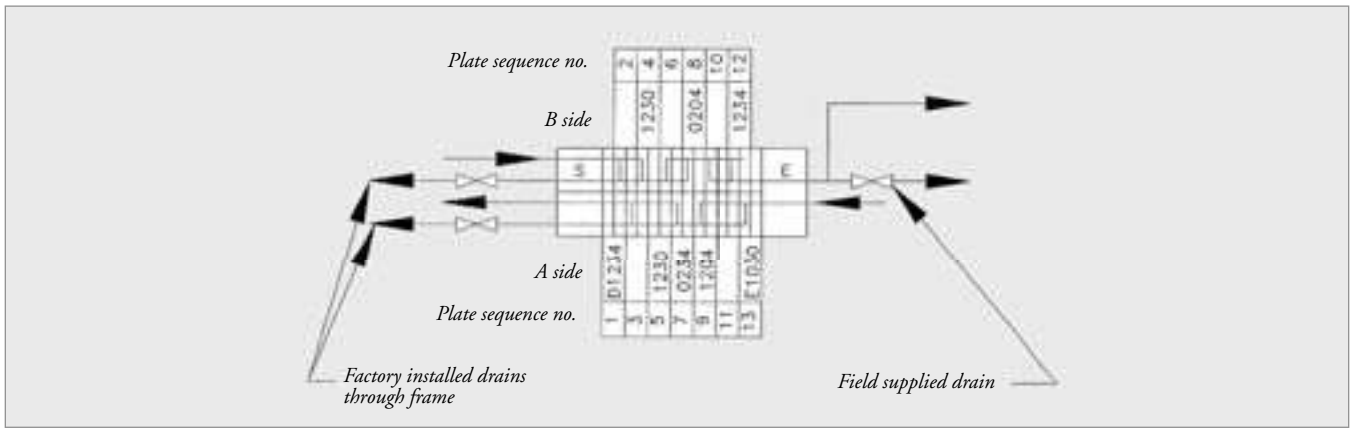

Figure 19
One pass—one pass.

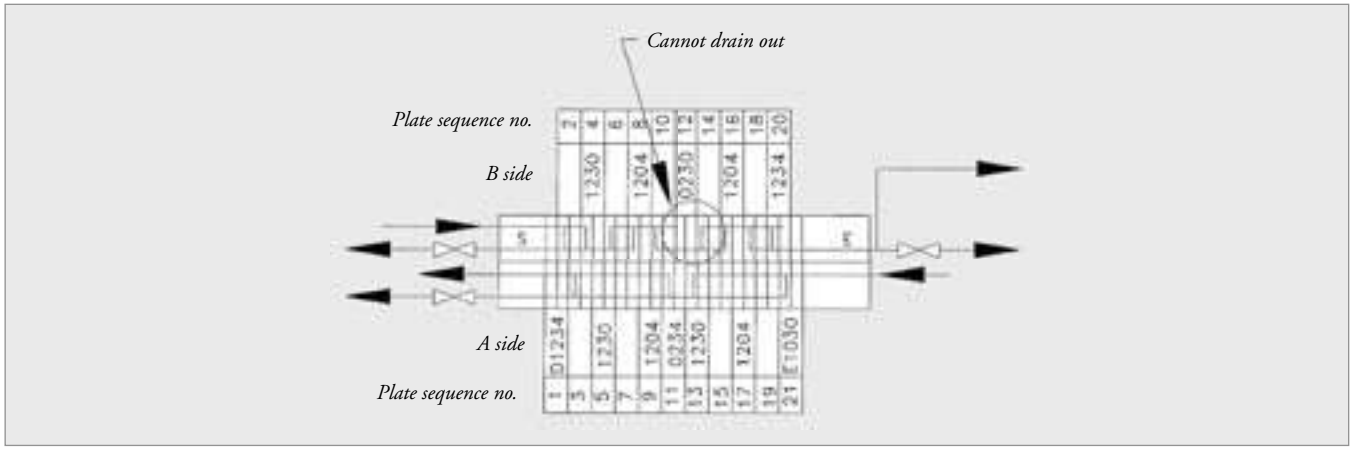

Figure 20
Five-pass unit with 2 passes that are not drainable.

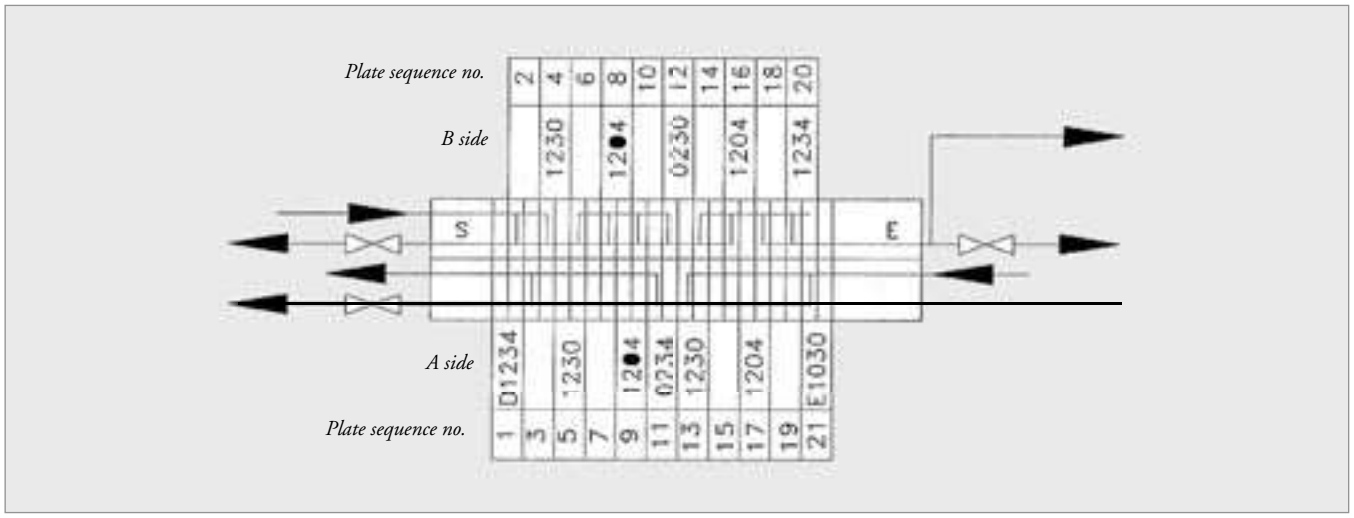

Figure 21
Five-pass with pass 3 and 4 as drainable. (Plates 8 and 9 have small drain holes.)

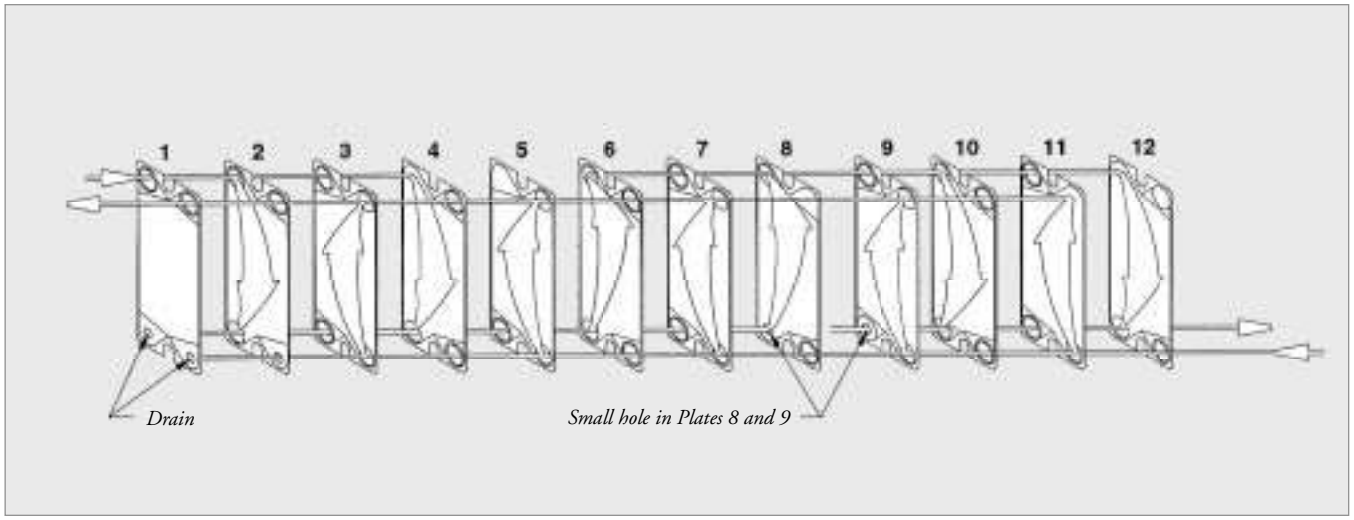

Figure 22
Showing first 12 of the 21 plates in Figure 21 with drains in plates 8 and 9.

Connecting "C" Frames

SUPERCHANGER units can be partitioned into multiple sections by employing the required number of connecting "C" frames when more than one heat exchange operation is required. Connecting frames allow several liquids to be processed at the same time or allow the same liquid to run through several stages of heat transfer. The flow arrangement with use of a connecting frame is illustrated in Figure 23 isometrically and in Figure 24 in an element composition diagram.

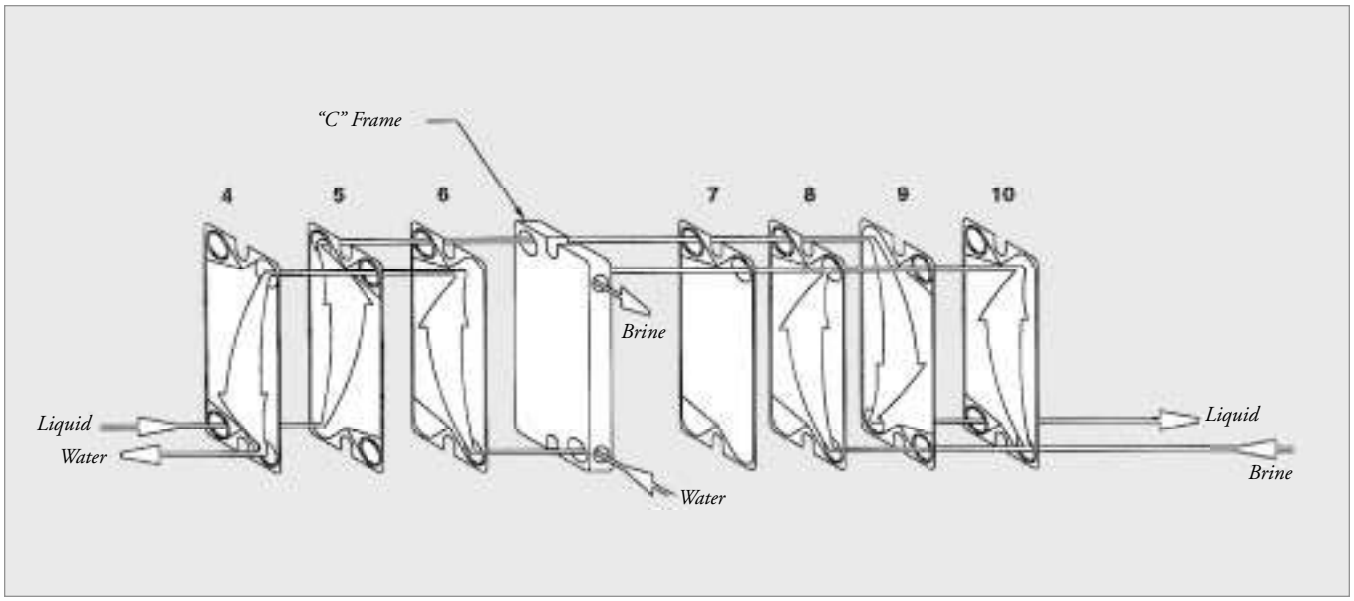

Figure 23
Connecting "C" frame—flow diagram.

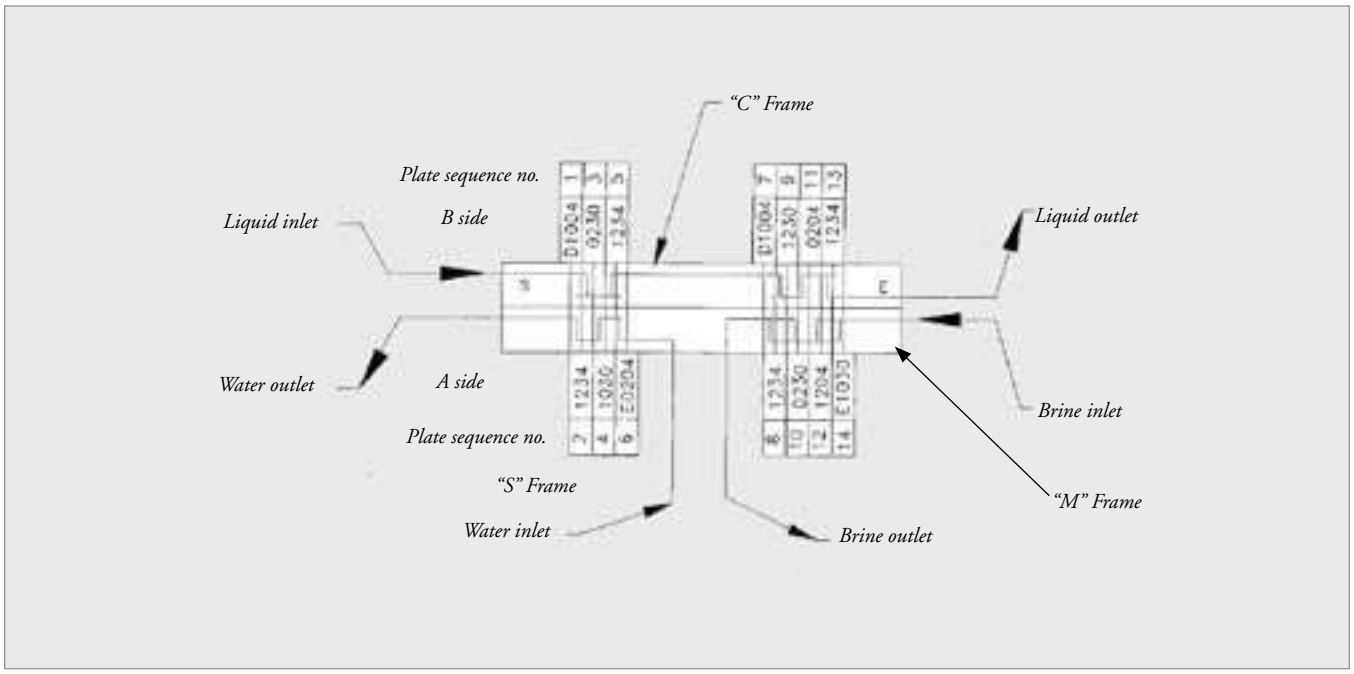

Figure 24
Connecting "C" frame—element composition diagram.

PLATE STYLES

Unlike all other SUPERCHANGER models, the GX series of plates is based on a diagonal flow pattern. On a typical one-by-one pass unit, nozzle numbers 1 and 3 will be the hot inlet and hot outlet connections. Nozzle numbers 2 and 4 are the cold inlet and cold outlet located lower right and upper left, respectively. Unlike other plates, GX series can also be designed for parallel flow. The flow direction is always designated in the model number by a "P" (parallel) or "D" (diagonal) after the letters "GX."

ULTRAFLEX (GX) and WIDE-GAP (GF) plates differ from conventional plates in another aspect. Because the gasket groove lies in the plate's neutral plane, additional configurations are possible with a given plate. This feature allows the heat exchanger to be more precisely designed for each application.

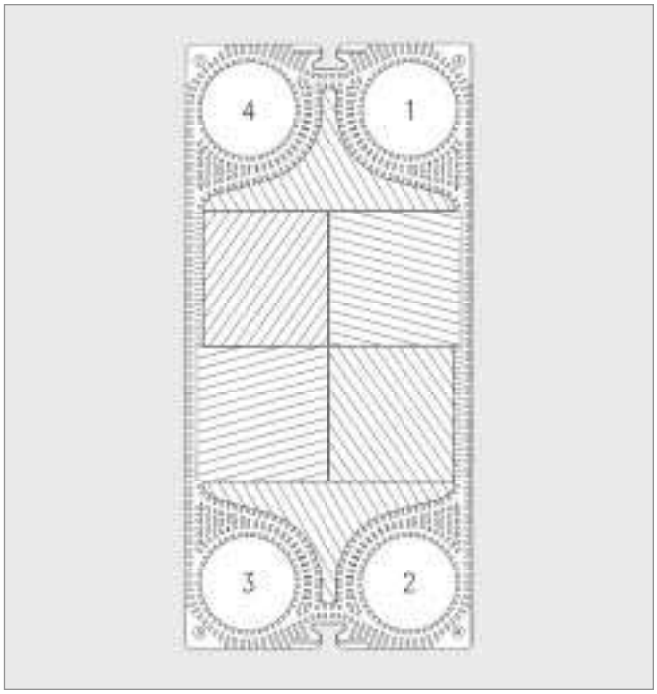

Figure 25
ULTRAFLEX (GX) plate design.

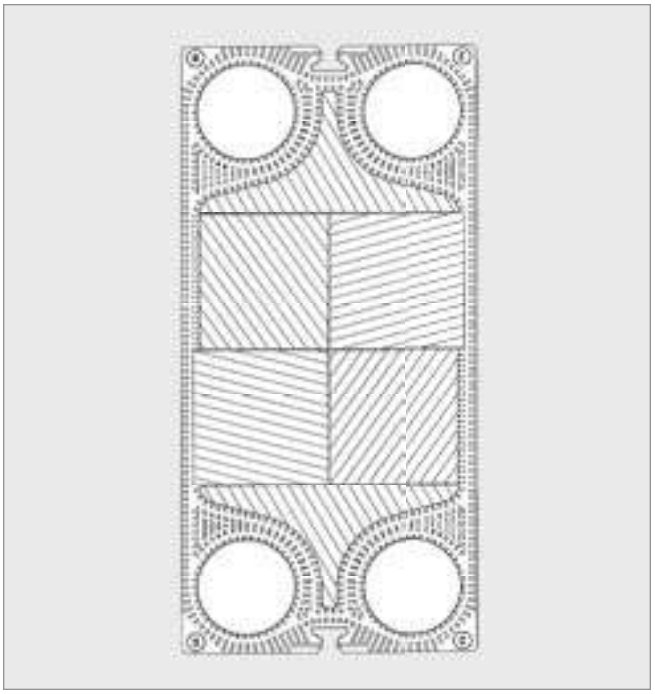

Figure 26
GX type "H" plate.

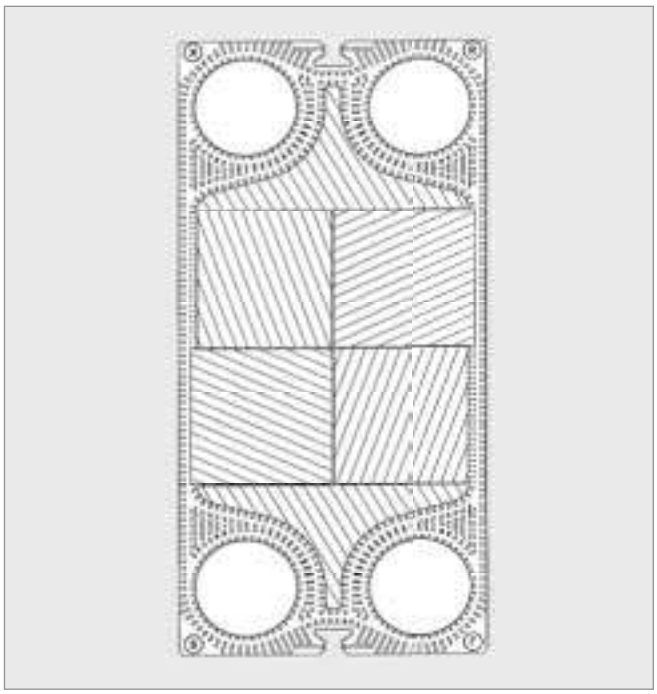

Figure 27
GX type "L" plate.

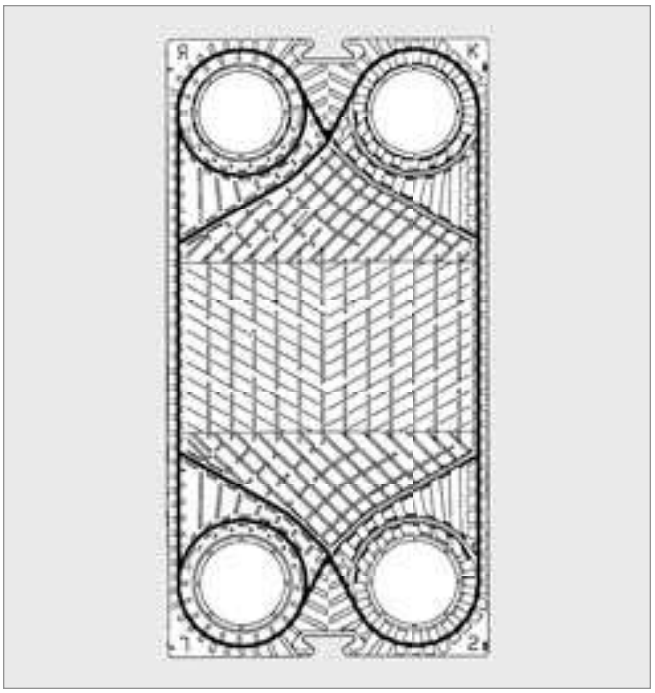

Figure 28
GF-type plate.

Drawings

The bottom left hand corner of each GF and GX unit drawing has a plate specification chart and plate arrangement/assembly listing to assist in determining the proper sequence and orientation of the plates in the unit. You will note that the gaskets used between the first and last plate of the plate pack and the respective frames are half thickness.

Due to the number of combinations achievable with GX and GF technology, we have simplified the assembly process by assigning a code letter to each corner of the plate. The plate is installed correctly when the letter is readable from the upper right corner when facing the front of the unit.

The following examples will help you understand the plate designations:

Quantity	Gasket Material	Theta/Piercing	Gluing
1	NBR	H 1234	RC Start
134	NBR	H 1234	LG
133	NBR	H 1234	RC
1	NBR	H 0000	RC End

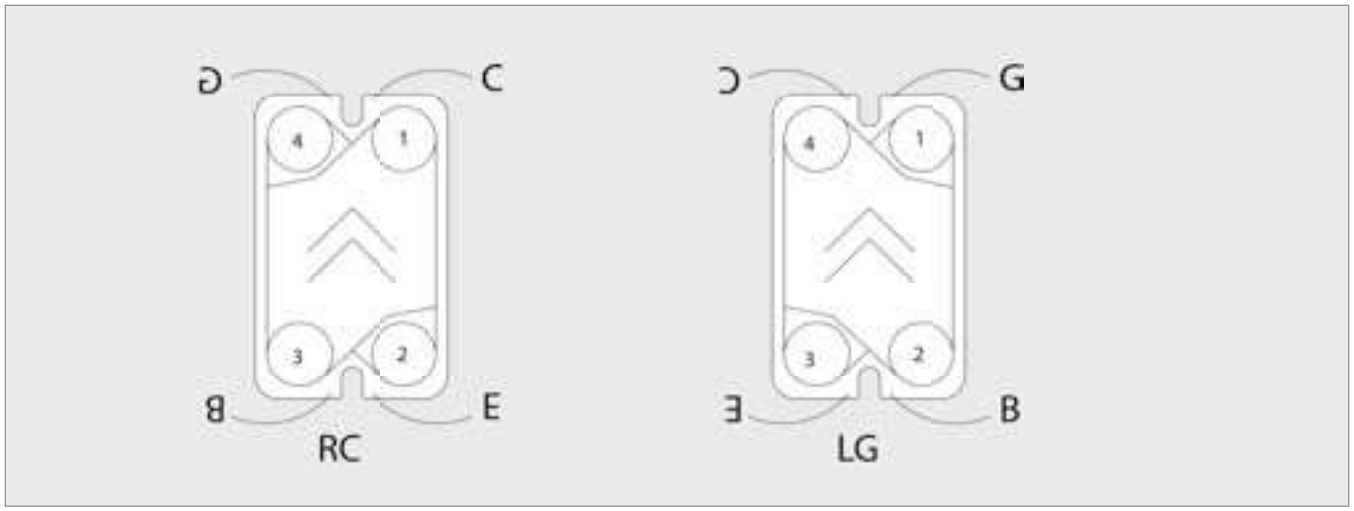

Figure 29
Ultraflex plate gluing assembly.

WIDE-GAP PLATE ASSEMBLY

In the Wide-Gap (GF) series of plates, three different channel geometries can be created with each model: wide, medium or narrow. All units will be wide-narrow, narrow-wide or medium-medium configuration. The code letter in the top right hand corner of the plates is used to create the various channel geometries as shown below.

GAP	FLOW ON SIDE	CODE
Wide	A	R + L
Wide	B	S + K
Medium	A	K + L or R + S
Medium	B	L + K or S + R
Narrow	A	K + S
Narrow	B	L + R

Four-Plate Sequence

In some instances, the arrangement in a GX model will follow a repeating four-plate sequence. An example is shown below:

Plate		
	208	S
	209	C
	210	R
	211	B
	212	S
	213	C
	214	R
	215	B

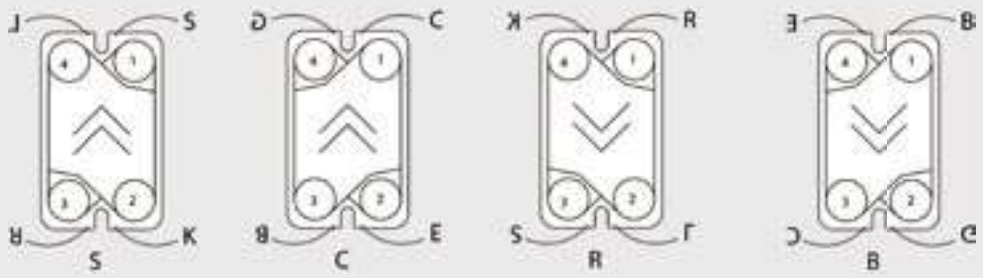

Figure 30
Four-plate ULTRAFLEX sequence.

Table 5 Plate Hanging Assembly–Four-Plate Sequence

Plate Sequence	Gasket Material	Piercing	Gluing	Hanging
1	NBR	H 1234	RC Start	B
2, 4....206	NBR	L 1234	LS	R
3, 5....207	NBR	H 1234	RC	B
208, 210....266	NBR	L 1234	LS	S, R
209, 211....267	NBR	H 1234	RC	C, B
268	NBR	L 1234	LS	S
269	NBR	H 0000	RC End	C

Multi-Pass Units

Table 6 provides an example of plate arrangement and specifications for a multi-pass unit.

Table 6 Plate Hanging Assembly–Multi-Pass Units

Plate Sequence	Gasket Material	Piercing	Gluing	Hanging
1	NBR	H 0234	RC Start	B
2, 4....22	NBR	L 1234	LS	R
3, 5....23	NBR	H 1234	RC	B
24	NBR	L 1234	LS	R
25	NBR	H 1004	RC	B
26, 28....46	NBR	L 1234	LS	R
27, 29....47	NBR	H 1234	RC	B
48	NBR	L 1234	LS	R
49	NBR	H 0230	RC End	B

GASKET DATA

Table 7 Temperature Ratings

Gasket Material	Max. Temp. (°F)	Color Code
EPDM (Full FDA Approved)	300	1 Grey + 1 Red
EPDM (Industrial Grade)	338	1 Grey
EPDM (Partial FDA Approved)	338	3 Grey
EPDM(IR)		1 Grey + 1Green
EPDM(P) Soft		2 Grey + 1 Green
EPDM(S)		2 Grey
EPDM-XH		4 Grey
Fluoroelastomer (Viton) A & G	350	1 Purple
Fluoroelastomer (Viton) B	35	2 Purple
Fluoroelastomer (Viton) FDA Full		1 Purple + 1 Red
Fluoroelastomer (Viton) GF	350	3 Purple
Fluoroelastomer (Viton) GF 04-312		1 Purple + 1 White
Steam grade fluoroelastomer for GE test units		4 Purple
Hypalon (CSM)	158	1 Red
NBR (Full FDA Approved)	270	1 Blue + 1 Red
NBR (Hydrogenated)	302	2 Blue

Gasket Material	Max. Temp. (°F)	Color Code
NBR (Industrial Grade)	270	3 Blue
NBR (Partial FDA Approved)	270	1 Blue
NBR LH (Low Hard)		1 Blue + 1 Green
NBR LT (Low Temp)		1 Blue + 1 Yellow
NBR(P)		1 Blue or (1 Blue + 1 White)
NBR(S)		No marking
NBR(S) 14-920		1 Blue + 1 Brown
Neoprene (CR)	255	1 Green
PTFE encapsulated EPDM		Nothing on the outside (core EPDM is marked with 1 Grey)
PTFE encapsulated NBR	270	Nothing on the outside (core NBR is marked with 3 Blue)
R.C. Butyl		1 Yellow
Silastic (Dow)		None
Silicone		1 Orange (only if the rubber color is black)

*This gasket requires the use of .8 mm (.032 in.) thick plate and a special double side tape instead of Pliobond.

DO NOT OVER TIGHTEN!

The above temperatures are the maximum allowable regardless of applications. In some cases, the upper limit may be lower depending on the fluids being handled and on the unit design pressure.

Gaskets—Glued

Each plate has a molded one piece boundary gasket which is glued into the continuous gasket groove in each plate. The liquid flowing on the surface of each plate flows on the inside of each boundary gasket.

Every port hole gasket contains four bleed passages. (See Figure 32.) If one of the liquids should leak beyond a boundary gasket, it will flow to the outside of the unit, thus preventing any possible intermix. (See Figures 31 and 33.)

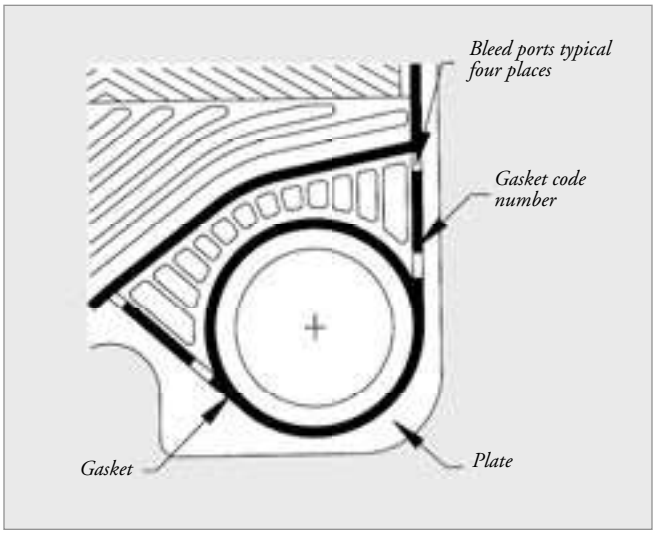

Figure 32
Four bleed passages.

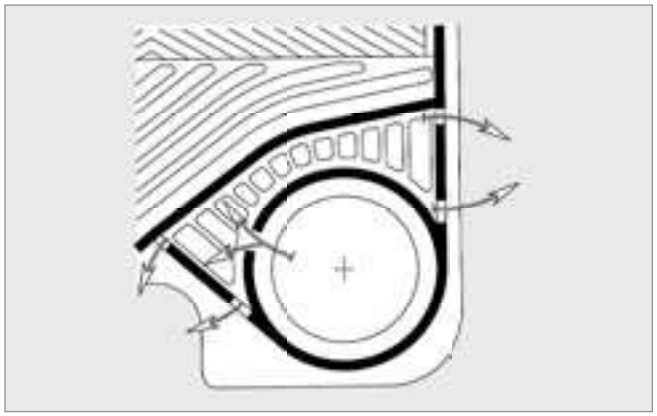

Figure 31
Flow to exterior from damaged boundary gasket.

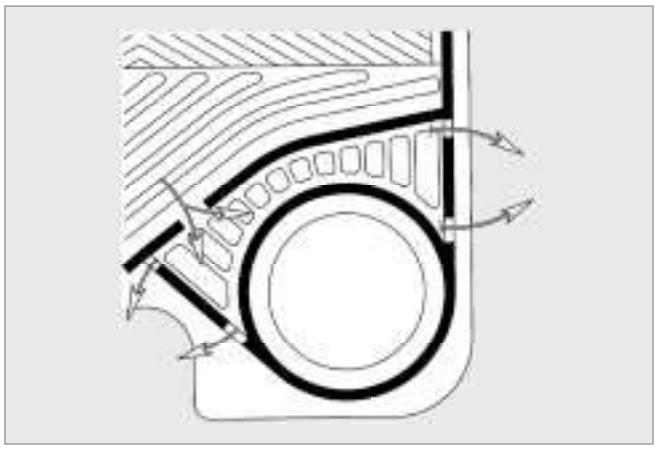

Figure 33
Flow to exterior from damaged boundary gasket.

Gaskets—Glueless

SUPERLOCK®

Functionally, Tranter's patented SUPERLOCK® glueless gaskets perform in the same manner as glued gaskets (see Figures 30, 31 and 32). SUPERLOCK's unique lock-in design allows simple installation and removal without glue. The gasket has tabs that press easily into the holes in the plate. Please note that the differences between glueless gasket plate assemblies and glued gasket plate assemblies do not allow for the use of a glued gasket on a SUPERLOCK style plate. The use of a glueless gasket on a plate requiring a glued gasket is also incorrect. (NOTE: the D, E and any special turning plates will be standard spot-glued gasketed.) The SUPERLOCK design is indicated by replacing the "X" in the model number with an "M" for a mechanically attached gasket. It is available in the following models: UMP-005, UMP-010, UMP-060, UMP-200, UMP-400, GMP-026 and GM-010.

Clip-On

Tranter's Clip-On glueless gaskets also perform in the same manner as glued gaskets.The unique design allows easy and fast clip-on installation without glue or tools, as well as simple removal. Positive gasket seating and lock-in eliminates assembly uncertainties. After inspection, undamaged gaskets can be reused.

The Clip-On gasket system is available in NBR and EPDM, both industrial and FDA ratings. The Clip-On design is available in the following models: GMP-026, GC-8, GC-026, GX-26, GX-42 and GL-13. Four of these models—GC-8, GX-26, GX-42 and GL-13—are interchangeable plates, and can be used with either glued or Clip-On gaskets.

Table 8 Typical Clip-On Gasket Installation

PLATE NO.	GASKET	PLATE	CLIPPING	HANGING
1	NBR (S)	H0230	RC START	B
2, 4, 6, 8, 10	NBR (S)	H1234	LG	E
3, 5, 7, 9, 11	NBR (S)	H1234	RC	B
12, 14, 16, 18	NBR (S)	H1234	LG	GE
13, 15, 17, 19	NBR (S)	H1234	RC	CB
20	NBR (S)	H1234	LG	G
21	NBR (S)	H1004	RC END	C
22	NBR (S)	H1004		PARTITION
23	NBR (S)	H1004	RC START	B
24, 26, 28, 30, 32	NBR (S)	H1234	LG	E
25, 27, 29, 31, 33	NBR (S)	H1234	RC	B
34, 36, 38, 40	NBR (S)	H1234	LG	GE
35, 37, 39, 41	NBR (S)	H1234	RC	CB
42	NBR (S)	H1234	LG	G
43	NBR (S)	H0230	RC END	C
Model: GXD-042; Plate Material: 304 SS; Plate Thickness: 0.5 mm.				

Plate No.: Indicates plate number if single number is given. Indicates a numerical sequence pattern if multiple numbers are given. If multiple letter codes are given in the Hanging column, an alternating sequence between the two letters should be followed as indicated in the Plate No. column.

Gasket: Defines the gasket material.

Plate: A five-digit identifier, which describes plate theta as being "H" high or "L" low, is followed by four integers. These four integers indicate which ports are pierced. A zero (0) denotes NO piercing at this port location.

Clipping: An eight-character field describing how the gasket is to be clipped to the plate. The first letter describes whether the closed port (ringed gasket corner) is in the Lower Right or Lower Left. Therefore, "R" is Right and "L" is Left. The second letter denotes the plate letter code. Both of these descriptions apply when the plate is viewed upright with the designated letter code being read left-to-right in the upper right hand quadrant of the plate. Gaskets will be clipped to the front of plate as viewed in their installed orientation from front-to-back of the assembled unit. "Start" or "End" can be added to the first two-letters with a space between to denote special gasketing instructions for the first and last plates between end-frames and/or partition plates.

Hanging: Indicates the letter code by which a plate is to be hung in the unit. This letter should be located in the upper right of the plate and read from left-to-right. The plate should be viewed as if from looking from the front of the unit.

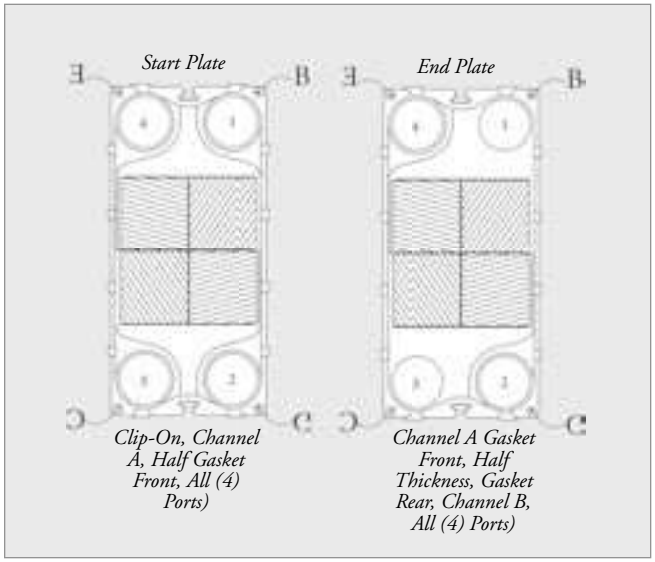

Figure 34
GX Clip-On codes (diagonal flow).

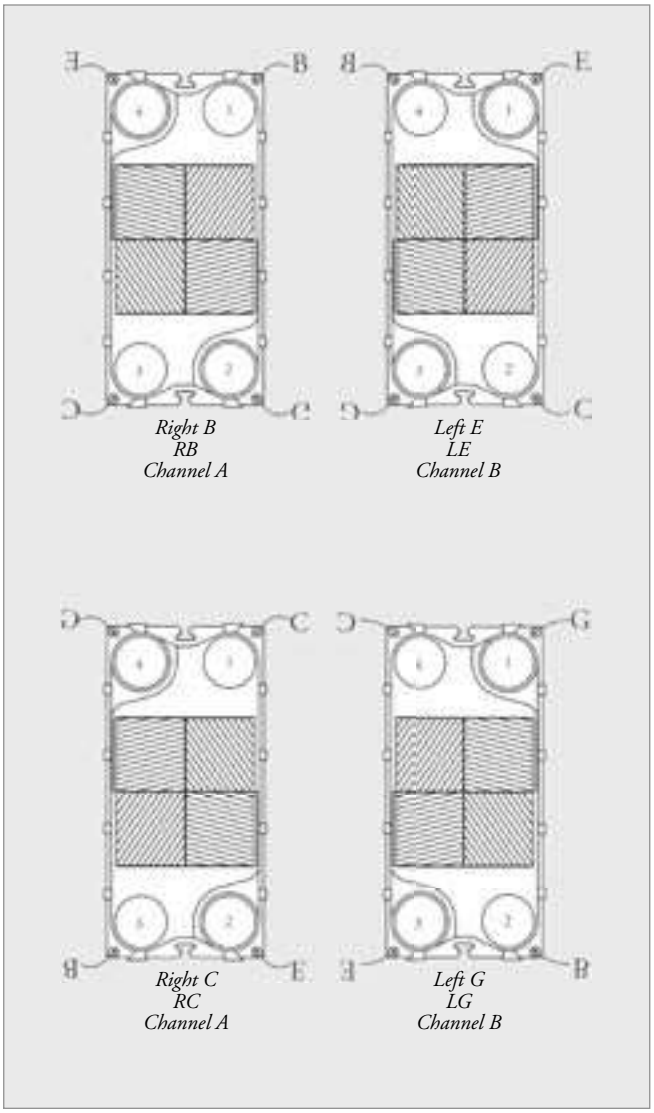

Figure 35
GX Start and End plate explanations.

Gasket Storage Procedures

When SUPERCHANGER heat exchanger plate gaskets are maintained as spare parts, it is important that certain storage procedures be followed to assure that the elastomeric compounds making up the gaskets do not deteriorate and the useful life of the gaskets is preserved.

1. Store in an area where the temperature does not exceed 70°F. The ideal storage temperature is 60°F. NOTE: Never store in an area where the temperature may fall to or below 32°F.
2. Maintain a maximum of 70% relative humidity.
3. Store in a darkened room. Ultraviolet light must be avoided.
4. Store gaskets so they are free from tension. Do not store in a stretched or severely bent condition.
5. All potential sources of Ozone, such as operating electric motors or welding equipment, must be removed from the storage area.
6. Organic solvents, acids, etc. must not be kept in the storage area.
7. Do not store near heating system radiators.
8. Cover or keep the gaskets in bags or boxes to minimize exposure to air circulation.
9. Keep gaskets free from dust and particulates.

Mixed Gasket Materials

Most SUPERCHANGER units are equipped with gaskets made of one material. However, there are two conditions that dictate the use of different material on a plate.

The first is gasket/fluid compatibility. In this case, one material is not suitable for both fluids in the heat exchanger. An example is heating quench oil with 285°F steam. Quench oil dictates the use of nitrile rubber gaskets, while steam temperature requires EPDM gaskets.

The second reason for using two gasket materials on a single plate is cost. This is encountered when an expensive material (usually viton) is required on only one side of the SUPERCHANGER unit. A significant savings can be realized by using a less expensive gasket material on the other side.

As an example: Cooling 180°F sulfuric acid with tower water requires viton on the acid side, but nitrile is sufficient on the water side.

Each plate has contact with both fluids in a SUPERCHANGER unit. One fluid travels across the plate while the other fluid passes through the gasketed port holes. In a mixed gasket unit, each plate will have two materials. The fluid traveling across the "A" plate requires gasket material 1. The fluid on the "B" plate requires gasket material 2.

In the case of a UX, SX, GF or GC series model, the "A" plate will have material 1 on the perimeter while port holes 3 and 4 are material 2. The "B" plate will have material 2 on the perimeter with port holes 1 and 2 of material 1. GX models with mixed gaskets would be similar. However, flow is diagonal so diagonally opposed ports would have the same gasket material.

All SUPERCHANGER gaskets are purchased as one piece-molded items. To physically accomplish mixing gaskets on a plate, the port holes are cut from both gaskets. Subsequently, the port holes of material 1 are matched with the perimeter of material 2 and vice versa. (See Figure 36.)

The following illustrates the above in a typical UX Series plate.

= Gasket Material 1
= Gasket Material 2

Fluid on "A" plate uses port holes 1 and 2.

Fluid on "B" plate uses port holes 3 and 4.

NOTE: Chevron orientation as related to "A" & "B" plates.

Porthole designations shown apply to all units purchased after June 1, 2002. Refer to unit drawing or previous IOM (SC-IOM-9) for older UX, SX, S, GC or TW series.

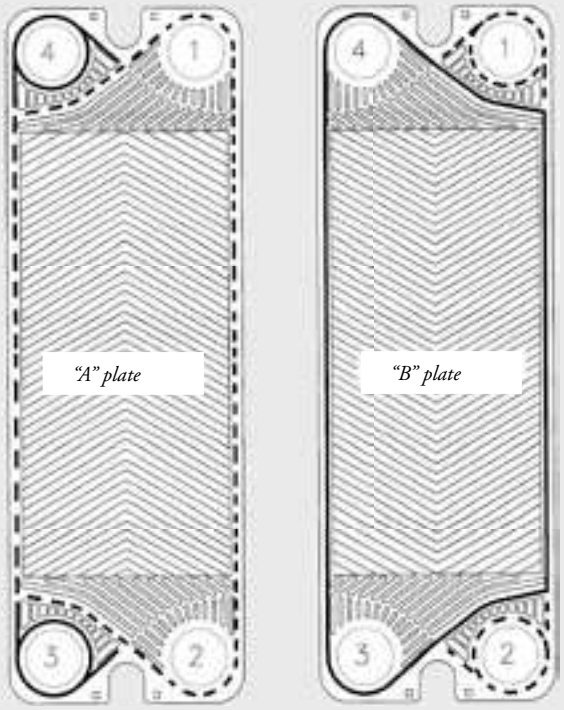

Figure 36
Multiple gasket materials on a UX Series plate.

Table 9 Typical Hanging Specification

PLATE NO.	GASKET	PLATE	GLUING	HANGING
1	NBR (S)	H0230	RC START	B
2, 4, 6, 8, 10	NBR (S)	H1234	LG	E
3, 5, 7, 9, 11	NBR (S)	H1234	RC	B
12, 14, 16, 18	NBR (S)	H1234	LG	G, E
13, 15, 17, 19	NBR (S)	H1234	RC	C, B
20	NBR (S)	H1234	LG	G
21	NBR (S)	H1004	RC END	C
22	—	H1004		PARTITION
23	NBR (S)	H1004	RC START	B
24, 26, 28, 30, 32	NBR (S)	H1234	LG	E
25, 27, 29, 31, 33	NBR (S)	H1234	RC	B
34, 36, 38, 40	NBR (S)	H1234	LG	G, E
35, 37, 39, 41	NBR (S)	H1234	RC	C, B
42	NBR (S)	H1234	LG	G
43	NBR (S)	H0230	RC END	C
Model: GXD-060; Plate Material: 304 SS; Plate Thickness: 0.5 mm.				

Plate No.: Indicates plate number if single number is given. Indicates a numerical sequence pattern if multiple numbers are given. If multiple letter codes are given in the Hanging column, an alternating sequence between the two letters should be followed as indicated in the Plate No. column.

Gasket: Defines the gasket material.

Plate: A five-digit identifier, which describes plate theta as being "H" high or "L" low, is followed by four integers. These four integers indicate which ports are pierced. A zero (0) denotes NO piercing at this port location.

Gluing: An eight-character field describing how the gasket is to be glued to the plate. The first letter describes whether the closed port (ringed gasket corner) is in the Lower Right or Lower Left. Therefore, "R" is Right and "L" is Left. The second letter denotes the plate letter code. Both of these descriptions apply when the plate is viewed upright with the designated letter code being read left-to-right in the upper right hand quadrant of the plate. Gaskets will be glued to the front of plate as viewed in their installed orientation from front-to-back of the assembled unit. "Start" or "End" can be added to the first two-letters with a space between to denote special gasketing instructions for the first and last plates between end-frames and/or partition plates.

Hanging: Indicates the letter code by which a plate is to be hung in the unit. This letter should be located in the upper right of the plate and read from left-to-right. The plate should be viewed as if from looking from the front of the unit.

GX Gluing Codes

Diagonal Flow Plates:

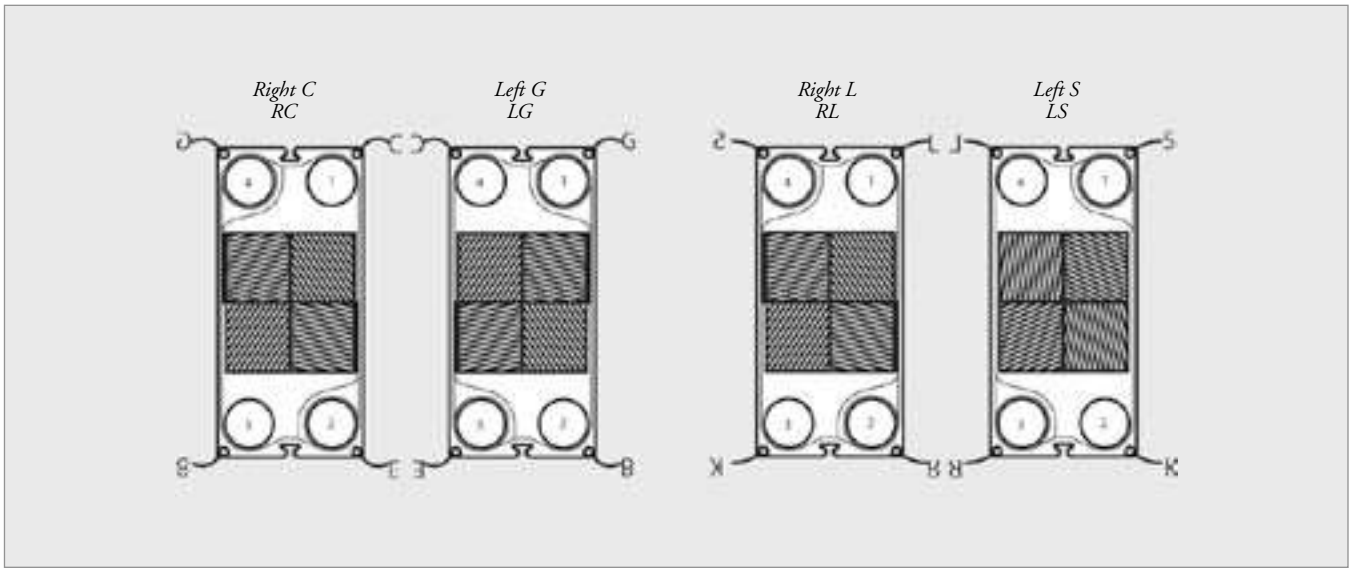

Parallel Flow Plates:

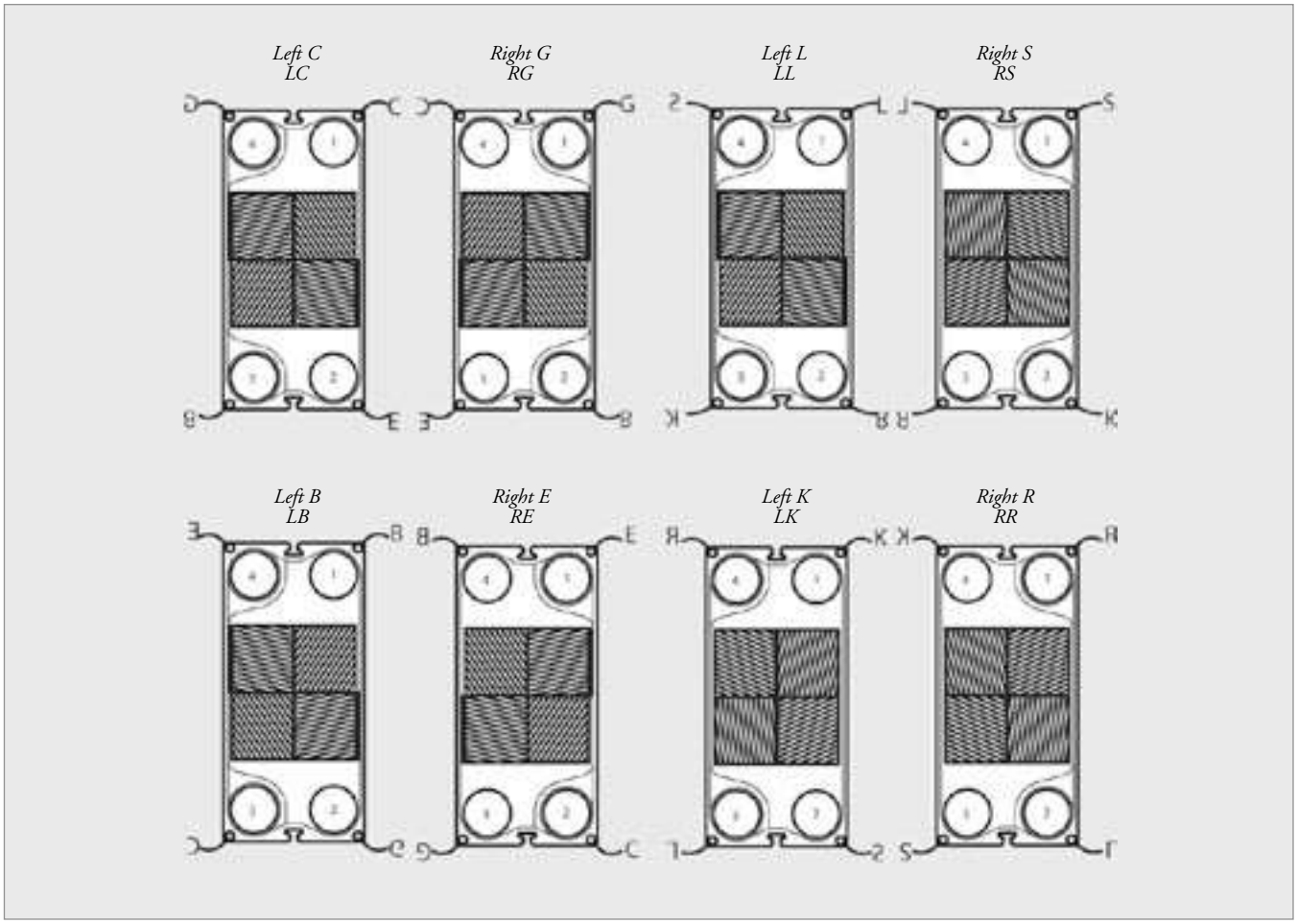

Figure 37
These drawings depict how GX plates are to be glued. Note that gluing instructions for diagonal flow GX plates can be reduced to four combinations while parallel flow GX plates require eight.

GX Start and End Plate Explanations

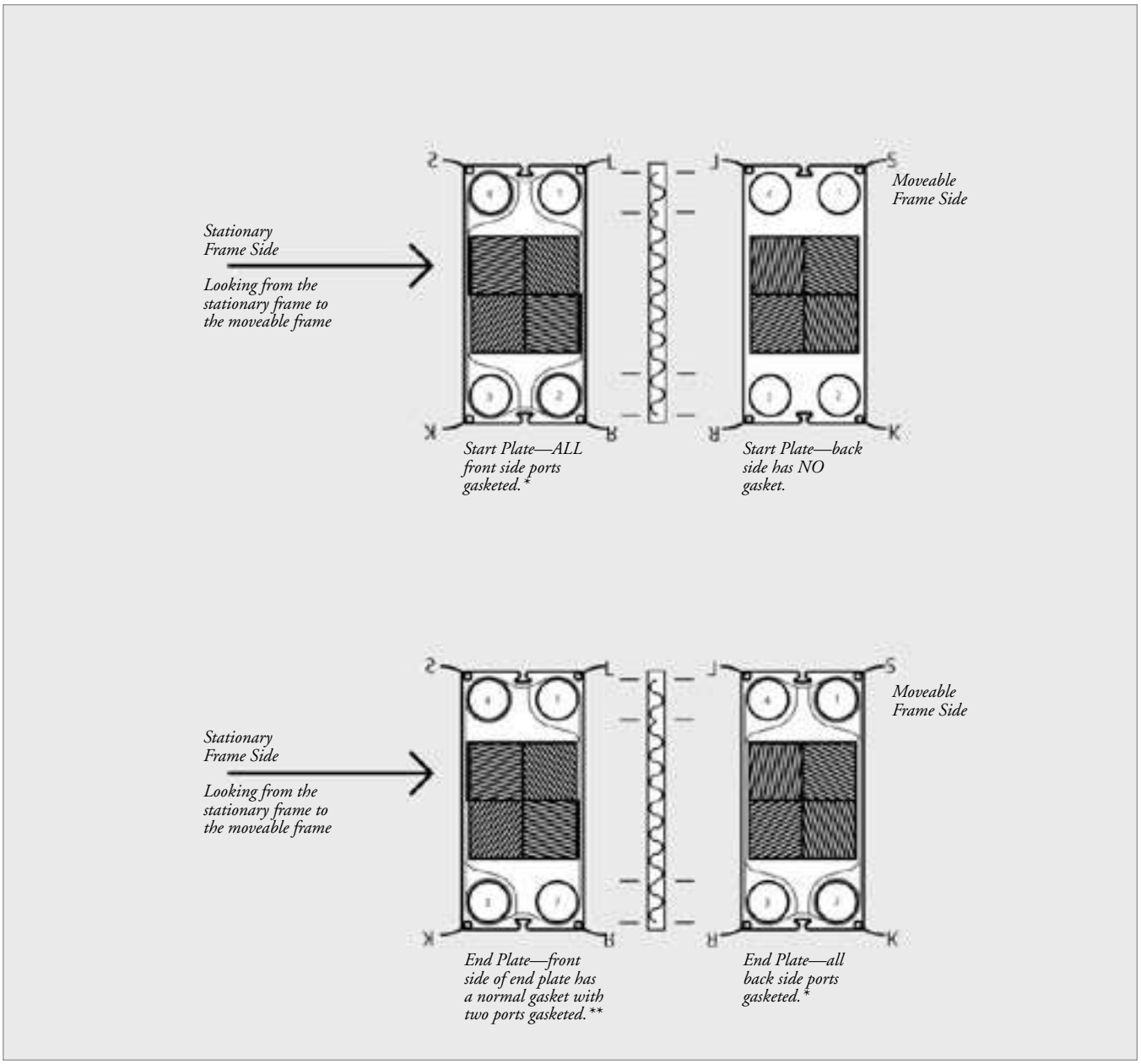

Figure 38

** These gaskets are half thickness and may be pieced together in various ways depending upon specific model. Flow direction (i.e., Diagonal/Parallel) is not a factor for these gaskets.*

*** This gasket will be the same as all non-Start/End plate gaskets. It will have two ports closed by the gasket. Which ports will be determined by the flow direction (Diagonal/Parallel). Diagonal flow is shown in these illustrations.*

INSTALLATION

Unpacking

SUPERCHANGER units (with optional shroud) are bolted to and shipped assembled on a skid. Other optional items, if supplied, are packed separately. All items should be checked against packing lists.

SHOULD ANY PARTS BE MISSING OR DAMAGED, IMMEDIATELY NOTIFY:

Tranter, Inc.
P.O. Box 2289
Wichita Falls, TX 76307
940-723-7125

Recommended Procedures

All frame models are provided with special lifting eyeholes for transportation and installation by crane. Rigidly set all models on the floor by means of foundation bolts. The following installation tips are also recommended:

1. Level the unit.
2. Locate the unit in an area that is not congested with piping and other equipment. For units with nozzles on the movable frame, refer to Figures 39 and 40 on page 29.
3. Provide three feet of working area around the unit.
4. The piping system must allow for thermal expansion. This can be accomplished inherently within the piping layout or by flexible connections.
5. Debris can cause damage to the gaskets. The gasket areas must be free from sand, gravel, pieces of iron, etc. before the unit is closed.
6. Lubricate the tie bolts.
7. Tighten all tie rod nuts. Tighten the unit to plate pack dimension per assembly drawings prior to making any assembly connections.
8. Uniformly tighten the plate pack. (See tightening instructions following.)
9. Flush connecting piping of all debris prior to "hook-up" with the heat exchanger.
10. Correctly center gaskets inserted between pipe flanges.
11. Do not apply valve and piping loads to the nozzles. Use pipe supports.
12. Install shutoff valves at all nozzle locations.
13. Place vent valves for draining at the highest possible point.
14. Provide pumps sending liquid into the SUPERCHANGER with throttling valves.
15. Install a safety relief valve if the maximum pressure output of the pump is greater than that of the heat exchanger.
16. When a pressure control valve is installed, place it at the inlet of the heat exchanger, even if a pressure control switch is provided.

CAUTION: Do not expose plate and frame heat exchangers to continuous vibration and/or high frequency cyclic on/off operation since damage from fatigue may occur. Do not use metering and pulsating type pumps. If the SUPERCHANGER unit is used in cyclic operation, the equipment should be tightened to the minimum dimension (see Table 3) to prevent fretting failure. Contact the factory for assistance.

Tightening the Plate Pack

The plate pack tightening length (distance between the facing surfaces of the "S" and "E" frames) is given on the assembly drawing and on the unit data plate. The tightening dimension is identified as "A Max." and "A Min." The unit is normally tightened at the factory to the average dimension between "A Max." and "A Min." "A Min." is a minimum length. Consult the SUPERCHANGER Engineering Department before tightening the unit to a smaller dimension. **CAUTION: On units operating in excess of 200 psig, the tightening dimension is to equal or approach the minimum dimension.** The wrench size required for the various SUPERCHANGER tightening bolt diameters is shown below. Refer to the SUPERCHANGER drawing for the actual bolt diameter.

BOLT DIAMETER (in.)	WRENCH SIZE (Across Flats) (in.)
3/4	1 1/4
1	1 5/8
1 1/4	2
1 1/2	2 3/8
1 3/4	2 3/4
2	3 1/8
2 1/4	3 1/2
2 1/2	3 7/8

Due to manufacturing tolerances, a unit is sometimes shipped with a plate pack dimension greater than the minimum dimension stated on the drawing. If leakage occurs, after a period of time, tighten the unit to the minimum length. If the plate pack length is shorter than the minimum length, damage to the plates at contact points may result. If leakage occurs at the minimum length, contact the SUPERCHANGER Engineering Department for recommendations regarding gasket replacement or additional tightening.

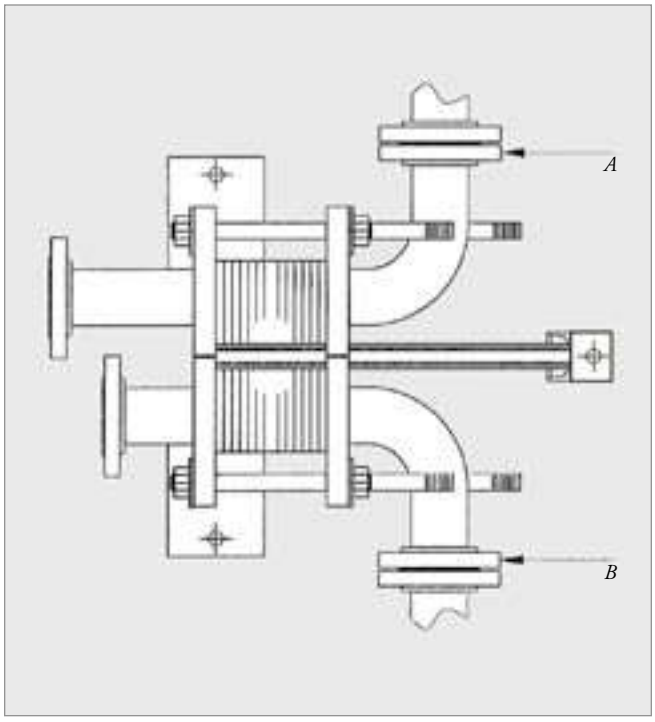

Figure 39
Correct piping installation—disconnecting A and B connections will permit movement of the end frame (top view).

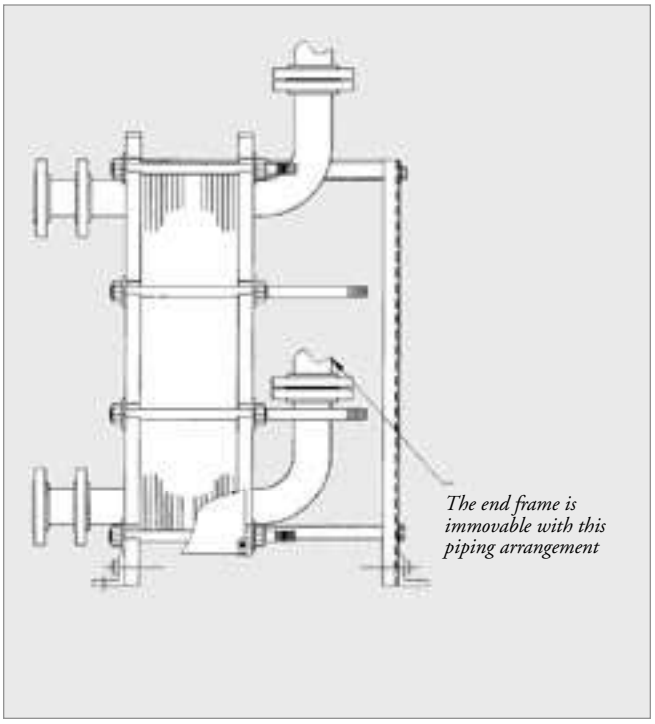

Figure 40
Incorrect piping installation—the end frame is immovable (side view).

An EZCHANGER Hydraulic Closing Device is available for assembly/disassembly of larger units. See page 45 for details.

Tightening Sequences

Figure 41 gives the tightening sequence for all units. When facing the stationary frame, tighten using the 1, 2, 3 and 4 bolts in sequence as far as possible before installing the remaining bolts. Be careful to tighten uniformly so that the moveable frame is kept parallel with the fixed frame within 1/4 in. Check the plate pack length on both sides of the plate pack at all tightening bolt locations. Tighten the unit, according to this procedure, to the plate pack dimension stated on the assembly drawing or unit data plate. Measure the dimension with a metal tape and tighten all bolts within 1/32 in. of the "A" dimension. (See Table 3.)

WARNING: Do not tighten the plate heat exchanger when it is holding liquid, under pressure or operating. Rupture of the gaskets and exposure to physical injury may occur. Always cool and drain the heat exchanger before tightening.

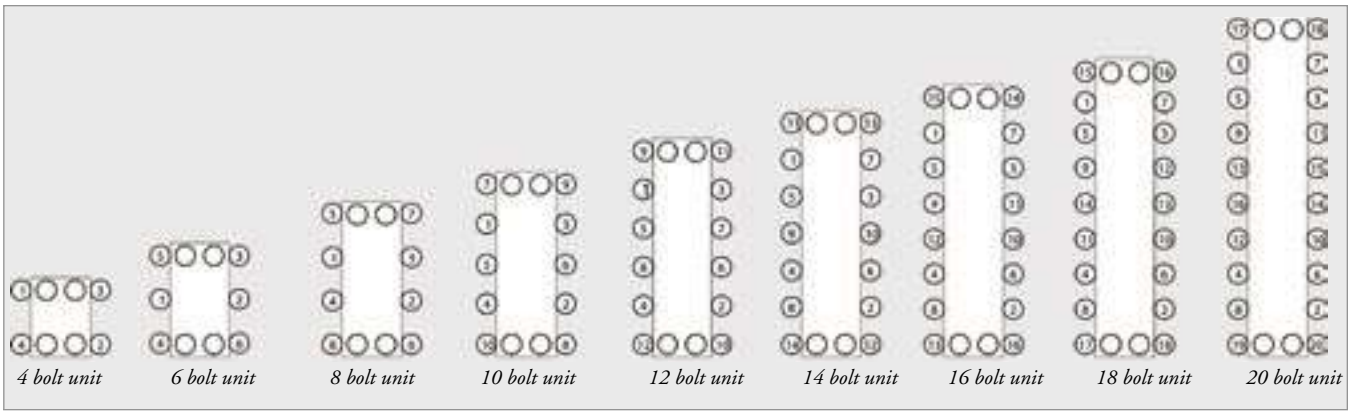

Figure 41
Tightening sequence for all units.

START-UP PROCEDURES

Precautions Prior to Start-Up

1. If there is particulate matter in the process streams, contact your Tranter sales/service office to determine if a pipeline or in-port strainer should be used before operating the unit.
2. Confirm that the plate pack length is correct.
3. Open all outlet valves completely.
4. Completely close the pump discharge valves to the heat exchanger.
5. Provide venting on both sides of the heat exchanger to facilitate the removal of air from the system.
6. Start pumps and increase the pressure by opening the pump discharge valve slowly.
7. When all air is out, liquid will flow out of the vent. Close the vent.
8. Slowly and simultaneously open the inlet valves for both fluids to avoid extreme over-pressure due to hydraulic shock.
9. Control the amount of heating or cooling by using throttling valves and product thermometers in conjunction.

CAUTION: To reduce the possibility of water hammer, do not use fast opening and closing valves. The pressure surge caused by a sudden change in the fluid velocity can be several times higher than the normal operating pressure of the system.

SERVICING

Shutting Down the Unit

1. Gradually decrease the pressure of both fluids simultaneously until all pressure is relieved.

2. Never open a superchanger unit when it is hot. Cool the unit to a warm temperature before opening to prevent personal injury and gasket loosening.

3. Completely drain fluids from the unit.

Disassembly Procedures

To open the exchanger, it is necessary to disconnect all connections (if any) to the "E" moveable frame. Lubricate all bolts prior to disassembly. Then completely loosen and remove all bolts except those indicated by a "filled circle" in the sketch below for the size unit involved. The four remaining bolts can then be loosened in any left-right sequence at 1/4 in. increments until they can be lifted out.

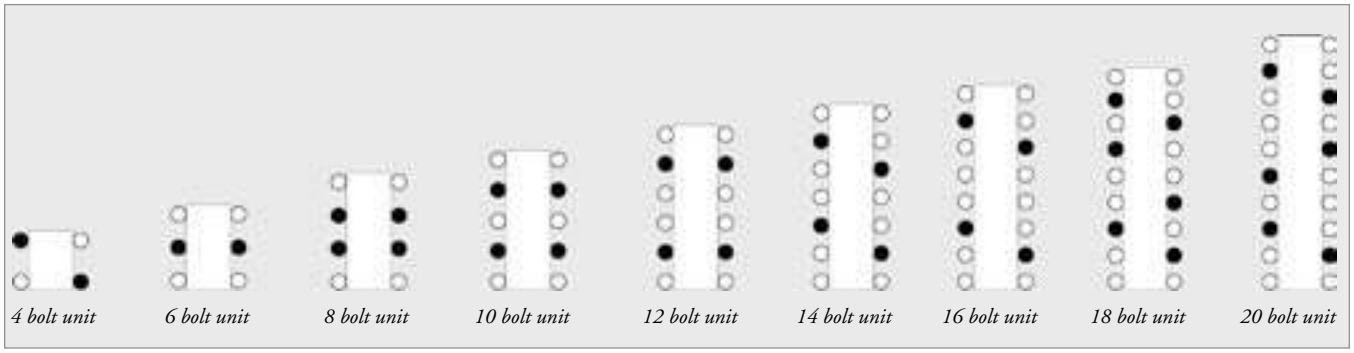

Figure 42
Loosening sequence.

Removal of Plates

CAUTION: Exercise care when handling plates. The edges are sharp. Leather gloves must be worn.

1. Remove the plates one by one from the frame.

2. Clean and/or inspect the plates hanging in the frame by removing them one at a time.

3. To remove a plate from the frame:

   (a) For UXP-005, UXP-010, UXP-100, SXP-070, SXP-400, SXP-140, GC, GX and GFP-050, GFP-100 and GFP-150 Series, tilt the plate and remove it.
   (b) GFP-030, GFP-080, UXP-200, UXP-060, UXP-400 and UXP-110 Series, lift the plate, push down on the hanger to release it, tilt the plate and remove it.
   (c) UXP-801 and UXP-802 Series, remove the sectional guide bar track, which is bolted into the bottom of the upper I beam near the moveable end. Tilt the plates and remove them one at a time. (There are three of the removable track sections along the guide bar length to facilitate plate removal.)

Replacing Plates

A faulty plate can easily be removed and replaced by a spare plate. Check that the new plate has the holes and gaskets arranged in the same way as the faulty one, and that the hangers are arranged in the same direction as the original installation. When the plates are properly assembled, the edges form a "honeycomb" configuration as seen in Figure 43.

If a four-hole plate is defective and no spare plate is available, the defective plate and one adjacent four-hole plate can be removed. The capacity of the plate heat exchanger is then reduced, but usually only slightly. When plates are removed calculate new "A" tightening dimensions from Table 3.

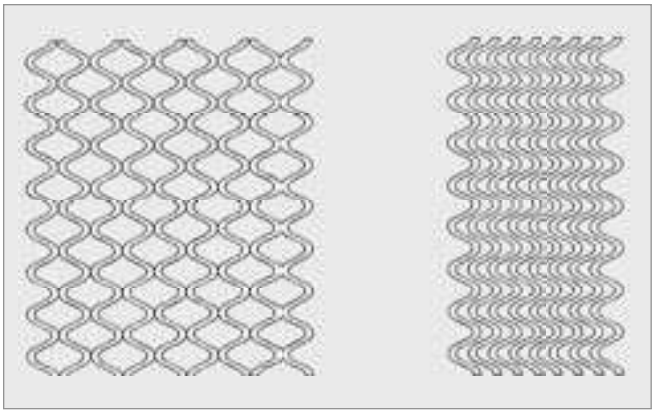

Figure 43
Plate assembly.

Replacing Gaskets

See Figures 4, 5, 6, 7 and 36.

Removing Old Gaskets

When a gasket requires replacement, steps A1, A2 and A3 may be followed or alternately steps B1, B2 and B3 may be used if facilities are available.

A1. Remove the plate from the frame and lay it on a clean, flat, horizontal surface. Examine and note exactly how the gasket is positioned on the plate, particularly what grooves the gasket does and does not occupy.

A2. Insert a pointed tool (screw driver) under the gasket until a finger can be inserted. Then pull slowly until the gasket is removed.

A3. Clean the gasket groove. Adhesive residue, oil, grease and other foreign matter can be removed by applying a solvent such as Methyl Ethyl Ketone (MEK), Acetone or other Ketones with a nylon or stainless steel brush. Commercial paint stripping compounds are also effective in removing the gasket adhesive. Dry/wipe the gasket groove. (NOTE: Use all solvents at room temperature (70°F) and in a well ventilated area not exposed to open flame, electric motors, etc.) Torches, grinding wheels and powered steel wire brushes are not to be used to remove adhesive residue since such tools will damage the plates.

B1. When a gasket requires replacement, remove the plate from the frame and lay it on a clean, flat, horizontal surface. Examine and note exactly how the gasket is positioned on the plate, the orientation of the bleed grooves and particularly what grooves the gasket occupies.

B2. For gasket removal, immerse the plate assemblies in a 10% to 15% caustic bath solution at 140°F to 180°F for approximately 8 hr. The caustic will soften the glue and the gaskets can be removed. Brushing with a nylon brush will help remove the softened residual glue. (NOTE: Soak time will vary depending on the type of service and the length of exposure that the plates have seen.)

B3. The caustic solution will normally remove most of the residue scale buildup on the heat transfer surface. Brushing with a nylon brush will help remove excess residue. Always rinse thoroughly.

To remove spot-glued gaskets, follow steps A1, A2 and, if necessary, step A3.

Remove scale deposits, such as calcium compounds, by immersing the plates in a 5% to 10% nitric acid solution at room temperature (70°F). This procedure must be followed by a thorough rinsing. See "Plate Cleaning Tips" on page 38.

Installing Continuously Glued Gaskets

1. Make sure the gasket groove area is clean and dry prior to regasketing.

2. Apply a uniform layer of adhesive in the appropriate gasket grooves. (A plastic bottle makes an ideal applicator, provided the tip of the applicator is designed to provide a bead that is approximately 1/8 in. wide.) Do not apply adhesive in amounts that will allow it to ooze out when the gasket is pressed into the groove. Apply adhesive at room temperature (70°F). After the glue is applied to the plate, it should be allowed to set for a minimum of 30 sec before the gasket is set in place. Work on pairs of plates to allow for this curing time.

   The recommended adhesive for all elastomeric gaskets is Pliobond 30. Pliobond 20 and 3M 1347 can also be used, if Pliobond 30 is not available. Hardening adhesives are not to be used. The number of gaskets that can be glued from one pint bottle of Pliobond 30 glue may be approximated as in Table 10.

3. Position the gasket on the plate making sure that the recess in the gasket at the bleed passage location is up. Also, when the proper side is up, the gasket code number will be visible in the bleed passage area. Proper groove fit and flow diverter access is dependent on end-to-end positioning. (See Figures 15 and 32.)

4. Using finger pressure, firmly press the gasket into the same grooves from which the original gasket was removed.

5. Compress the gasket by placing the plate under a weighted sheet of wood. The longer the compression time, the better the bond. Twelve hours cure time at room temperature (70°F) should be allowed to assure minimum required adhesion of the gasket to the plate for all elastomers except EPDM. EPDM gaskets require a minimum of 24 hr cure time at room temperature (70°F) to assure an adequate bond. (When several plates are being gasketed, they can be stacked on top of each other with the weighted wood sheet placed on the top plate of the stack.)

6. After compression time (step 5), use solvent to remove any excess adhesive that may have seeped out past the edges of the gasket.

7. Reinstall plate(s) in the unit insuring that the gasket surface and the sealing surface of the plate ahead are wiped clean to provide a positive seal.

NOTE: Refer to page 24 when using mixed gaskets.

8. Note that the "D" plate (always the plate next to the fixed frame end) requires different gaskets. The purpose of the "D" plate is to prevent fluid from flowing across the fixed end frame. The only sealing surface on the "D" plate is the port hole gaskets. "D" plate gaskets for the UX series consist of two half gaskets. "D" plate gaskets for the GFP-030 and GFP-080 plates consist of four port hole gaskets and straight strips, which fit in the gasket groove around the periphery of the plate. The wide port gasket fits the widest groove, and the narrow port hole gasket fits the narrow groove.

Table 10 Glue Requirements

MODEL	NUMBER OF GASKETS/PINT
XP-005	122
UXP-010	100
UXP-100	85
UXP-200	60
GFP-030	50
UXP-060, SXP-070	35
UXP-400	30
UXP-110	30
SXP-400, SXP-140	30
GFP-080	25
UXP-801, UXP-802	10
GXD-006	50
GXD-012, GL-013, GC-016	50
GXD-018, GCP-010	35
GXD-026, GCP-026	30
GXD-042	20
GXD-051, GCP-051	17

MODEL	NUMBER OF GASKETS/PINT
GXD-037	30
GXD-064	18
GXD-091	15
GXD-118	13
GXD-060, GCP-060	20
GXD-100	18
GXD-140	14
GXD-180	15
GXD-085	16
GXD-145	14
GXD-205	12
GXD-265	10
GXD-325	8
GFP-057	19
GFP-097	18
GFP-187	15
GL-230, GL-330, GL-430	8, 7, 6

Installing Spot-Glued Gaskets

Spot gluing of Elastomeric gaskets is covered under Tranter's U.S. Patent #5070939.

In the following procedure, after the glue is applied to the plate at the appropriate spots, allow it to set for a minimum of 30 sec before the gasket is mounted. Work on pairs of plates to allow for this curing time. Work in a well-ventilated area.

1. Clean the gasket groove in one plate with a rag moistened with Methyl Ethyl Ketone (MEK).

2. Apply a 1/8 in. diameter spot of Pliobond 30 approximately every 4 in. centered in the gasket groove of the plate just cleaned.

   a) Apply the glue so there are no thin spots.
   b) Apply spots of glue at the "T" joints (see Figure 44).

3. Clean the groove of a second plate, as in step 1.

4. Apply adhesive to the second plate, as in step 2.

5. Install the gasket on the first plate. Make sure the gasket is oriented as shown in Figures 15 and 32.

6. Install the gasket on the second plate, as in step 5.

> NOTE: **The purpose of working with two plates simultaneously is to allow the adhesive to set for a minimum of 30 sec before the gasket is applied. When working with small plates, a third plate can be incorporated into the above procedure to obtain set time. The curing time must not exceed 3 min.**

7. Compress the gasket by placing the plate under a weighted sheet of wood. The longer the compression time, the better the bond. Twelve hours cure time at room temperature (70°F) should be allowed to assure maximum adhesion of the gasket to the plate for all elastomers except EPDM. EPDM gaskets require a minimum of 24 hr cure time at room temperature (70°F) to assure an adequate bond. (When several plates are being gasketed, they can be stacked on top of each other with the weighted wood sheet placed on the top plate of the stack.)

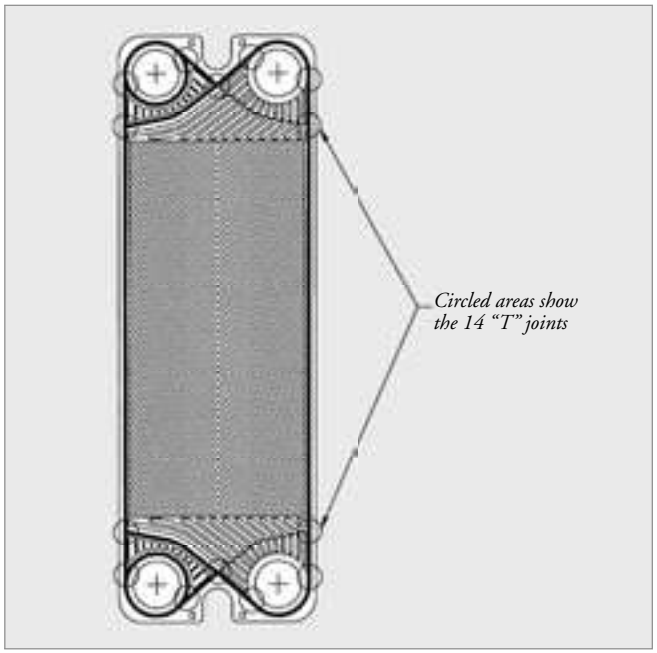

Figure 44
Locations at "T" joints where glue must be applied.

> NOTE: **Refer to page 24 when using mixed gaskets.**

8. After adequate compression time, use solvent to remove any excess adhesive that may have seeped-out past the edges of the gasket.

9. Reinstall plate(s) in unit insuring that the gasket surface and the sealing surface of the plate ahead are wiped clean to provide a positive seal.

Installing SUPERLOCK® Snap-In Gaskets

SUPERLOCK gaskets are covered under Tranter's U.S. Patent #4995455.

1. Position the gasket on the plate making sure that the recess in the gasket at the bleed passage location is up. When the proper side is up, the gasket code number will be visible in the bleed passage area. Correct end-to-end position is also important for a proper groove fit and fluid access to the flow diverter. (See Figures 15 & 32.)

2. Make sure that the tabs of the SUPERLOCK gaskets are lined up with the slots in the gasket groove of the plate.

3. Insert each tab inside its corresponding slot and push firmly until the tab locks into the slot. Make sure that each of the porthole tabs (located in the bleed port area towards the middle of the plate) is also snapped into its slot.

NOTE: **Refer to page 24 when using mixed gaskets.**

Installing Teflon Encapsulated Gaskets and Unit Assembly

CAUTION: **On units operating in excess of 200 psig, the tightening dimension is to equal or approach the minimum dimension.**

1. Install double-sided tape in the center of the gasket groove. Use continuous strips. Do not contaminate the tape surface.

2. Do not overlap tape strips as this will cause leakage in that area.

3. Install Teflon such that bleed ports (notches) in each section in rubber core are installed in the up position.

4. Install plates per the assembly drawing that is received with the unit.

5. Check top surface of Teflon and gasket seal surface for cleanliness.

6. Install all bolts and tighten the unit (snug tight only).

7. Refer to page 30 for tightening sequence.

8. Tighten unit in 1/16 in. increments to ensure even compression of gaskets.

9. Tighten to maximum dimension as shown on assembly drawing.

10. Single side hydrostatic test to design pressure shown on assembly drawing.

11. Double side hydrostatic test to test pressure shown on assembly drawing.

12. If unit leaks during either of the above tests, run 150°F to 170°F hot water for one hour. Let the unit cool and tighten to average dimension as shown on assembly drawing using same increments as in step 8.

13. Re-conduct the hydrostatic test.

14. If unit still leaks, mark plate and area of leakage.

15. Disassemble unit and check gasket and seal surface for defects, especially at the leakage sites. If no apparent defect is found, apply an even thin layer of "Teflon TFE Pipe Thread Sealer," furnished by McMaster Carr (www.mcmaster.com, part #4538K1), to Teflon gasket at leakage site.

16. Retighten unit using same procedure as listed above.

17. Re-conduct the hydrostatic test.

18. Unit should not seal. If unit is still leaking, contact the factory.

NOTE: **Refer to page 24 when using mixed gaskets.**

Installing Clip-On Gaskets

There is one kind of channel arrangement. The first, uneven and last channel will always be S2/S4. The even channels will always be S1/S3. The Tranter standard connection location is hot in/out S1/S3. Therefore, it will start and end with a cold channel. If a hot in/out in S2/S4 is required, the first and last channels will subsequently be hot.

1. Attach half-A gasket to the start plate in the RORU orientation, as in Figure 46. Hang by the ORU orientation, as shown in Figure 45.

2. Attach B gaskets to even plates by the LOLU orientation. (See Figure 46.) Hang by the ORD orientation, so the "O" is in the lower right corner. (See Figure 45.) This is equivalent to Channel B.

3. Attach A gaskets to odd plates by the RORU orientation, as shown in Figure 46. Hang by the ORU orientation, as in Figure 45. This forms a Channel A.

4. Attach B gasket to end plate by the LOLU orientation, and attach half-A gasket to the backside of the end plate by the RORU orientation. (See Figure 46.) Hang by the ORD orientation with B gasket facing inside. (See Figure 45.) This completes the plate pack.

The following is an example of the above in a GLD-013 heat exchanger:

Plate Hanging Assembly

PLATE SEQUENCE	ATTACHING	HANGING
1	RORU Start	ORU
2, 4..54, 56	LOLU	ORD
3, 5..55, 57	RORU	ORU
58, 60..70, 72	LOLU	ORD
59, 61..71, 73	RORU	ORU
74	LOLU End	ORD

Gasket Attaching Assembly

QUANTITY	ATTACHING
1	RORU Start
28	LOLU
36	RORU
8	LOLU
1	LOLU End

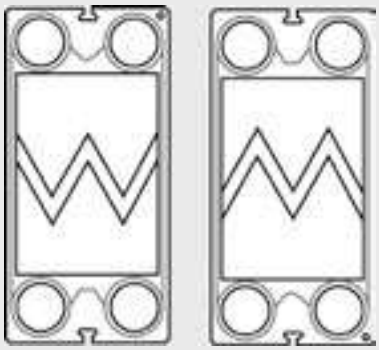

Figure 45
Plate hanging orientation.

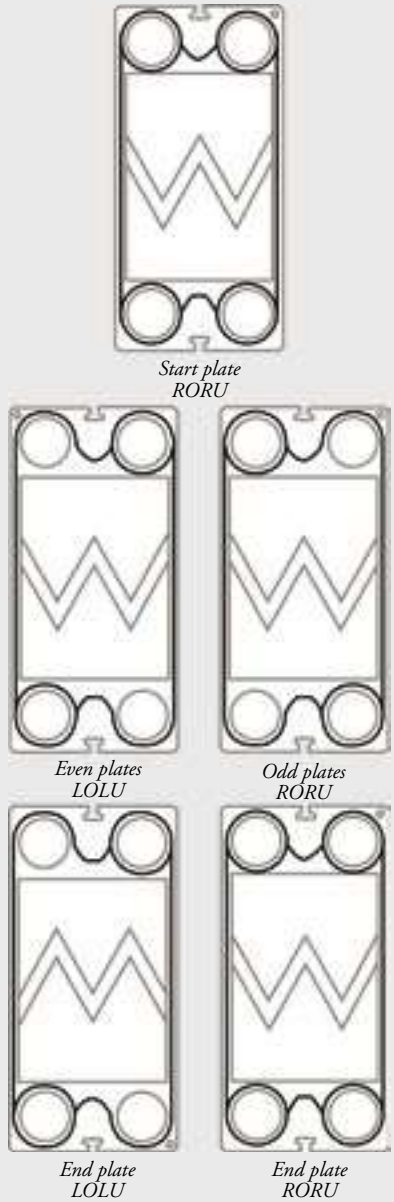

Figure 46
Gasket attaching orientation.

CLEANING

SUPERCHANGER plate and frame type heat exchangers are designed for both manual cleaning and cleaning-in-place operations. Where possible, utilize a cleaning-in-place system that will allow pumping water or cleaning solutions into the unit without disassembling. A CIP system may be purchased through Tranter. If this is not feasible, use the manual method. Descriptions of the two cleaning procedures follow.

Steps for Manual Cleaning of Plates

1. Open the unit in accordance with disassembly procedures on page 31.

2. Clean each plate separately. Depending upon the amount of cleaning to be performed, the plate can be cleaned while still hanging in the unit or removed, placed on a flat surface and cleaned.

3. **Never use a steel brush or steel wool on the plates.** If a brush is required, use one with bristles that are softer than the plate material. If iron is forcibly rubbed on a stainless steel surface, it is impossible to remove all imbedded particles and will result in accelerated rusting and/or corrosion. If it is absolutely necessary that a metal brush be used, the brush material must be compatible with the plate material.

4. Be careful not to scratch the gasket surfaces.

5. After brushing, each plate should be rinsed with clean water.

6. Use high pressure rinse when cleaning continuously glued plate assemblies.

7. See "Plate Cleaning Tips" on page 38 for specific types of deposits.

8. **The gaskets must be wiped dry with a cloth.** Solid particles adhering to the gaskets cause damage and result in leakage when the unit is put back in operation.

9. The lower portion of each plate as hung in the unit should be inspected carefully and cleaned appropriately as this is the primary area where residual solid material tends to accumulate.

10. Wipe off the mating surface, i.e., the rear of the plate where the gasket seats.

11. Upon completing the cleaning, inspection and installation of each plate, the unit may be closed, tightened per the assembly drawing and the tightening instructions (page 30), and placed into operation.

CAUTION: **Do not use chlorine or chlorinated water to clean stainless steel, Hastelloy, Incolloy, Inconel and 254SMO. Chlorine is commonly used to inhibit bacteria growth in cooling water systems. It reduces the corrosion resistance of stainless steel, Hastelloy, Incolloy, Inconel and 254SMO. The "protection layer" of these steels is weakened by chlorine and makes them more susceptible to corrosion. This increase in susceptibility to corrosion is a function of time and the chlorine concentration. For any applications where chlorination must be used with non-titanium equipment, please contact the factory.**

Plate Cleaning Tips

1. Do not use hydrochloric acids, or water containing in excess of 300 ppm chlorides, with stainless steel.

2. Do not use phosphoric or sulfamic acid for cleaning titanium plates.

3. Limit cleaning solution concentration to 4% in strength, with temperatures not exceeding 140°F unless otherwise specified.

General guidelines for cleaning are tabulated below. (Please refer to steps 1 through 3 above for precautions.)

TYPE OF FOULING	SUGGESTED CLEANERS
Calcium Sulphate, Silicates	Citric, Nitric, Phosphoric or Sulfamic Acid
Calcium Carbonate	10% Nitric Acid (1 volume concentrated Nitric Acid with specific gravity 1.41 to 9 volumes of water), Oakite 131
Alumina, Metal Oxides, Silt	Citric, Nitric, Phosphoric, or Sulfamic Acid (To improve cleaning, add detergent to acid.)
Barnacles, Mussels, Seaweed, Wood Chips	Back flush per cleaning-in-place procedure below and Figure 48
Biological Growth	Sodium carbonate or sodium hydroxide

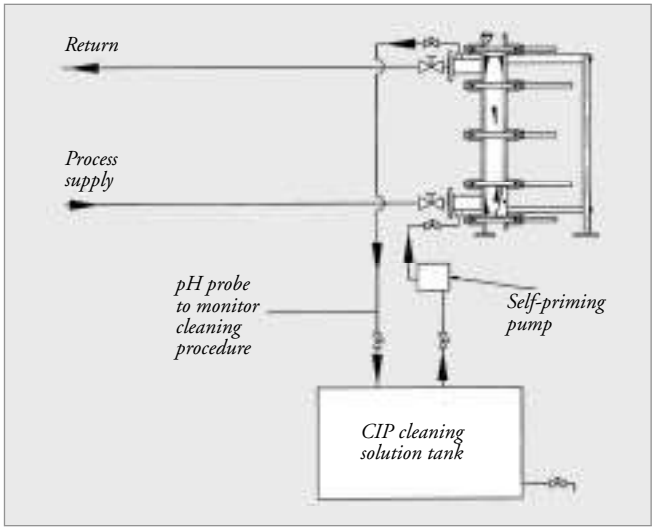

Figure 47
Cleaning-in-place flow chart.

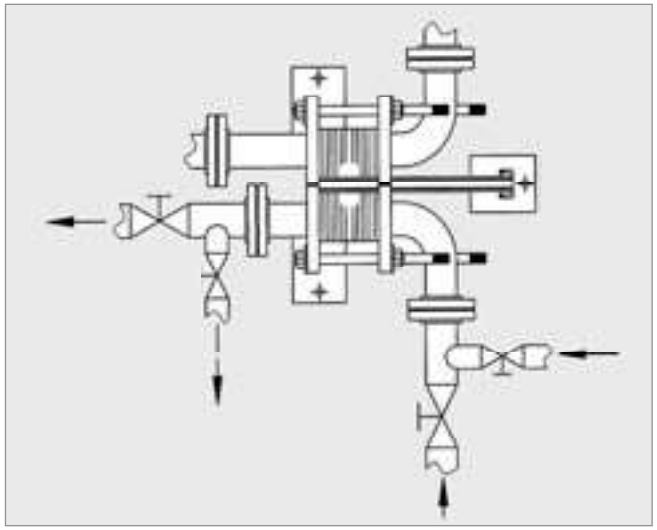

Figure 48
Piping using brine (top view).

Cleaning-In-Place (CIP)

Cleaning-in-place is the preferred cleaning method when especially corrosive liquids are processed in a SUPERCHANGER unit. Install drain piping to avoid corrosion of the plates due to residual liquids left in the unit after an operation cycle. (See Figure 47.)

To prepare the unit for cleaning, follow the procedures listed below:

1. Drain both sides of the unit. If it is not possible to drain, force liquids out of the unit with flush water.

2. Flush the unit on both sides with warm water at approximately 110°F until the effluent water is clear and free of the process fluid.

3. Drain the flush water from the unit and connect CIP pump. (See "Plate Cleaning Tips" above for suggested cleaners.)

4. For thorough cleaning, it is necessary to flow CIP solution bottom to top to insure wetting of all surfaces with cleaning solution. When cleaning multiple pass units, it will be necessary to reverse flow for at least 1/2 the cleaning time to wet all surfaces.

5. For optimum cleaning, use the maximum flow rate of water, rinse, or CIP solution that the CIP nozzle size will allow (2 in. @ 260 gpm, 1 in. @ 67 gpm.) A CIP operation will be most effective if performed on a regularly scheduled basis and before the unit is completely fouled.

6. Flush thoroughly with clean water after CIP cleaning.

CAUTION: **If brine is used as a cooling medium, completely drain the fluid from the unit and flush the unit with cold water prior to any cleaning operation. Corrosion will be kept at a minimum if all traces of brine are eliminated before using hot cip solutions on either side of the heat exchanger.**

Back Flushing and Strainers

Often, when fibers or large particulates are present, back flushing of the unit proves to be very beneficial. This is accomplished by either of the following methods:

1. Flush the unit with clean water in reverse flow pattern to the normal operating direction.

2. Arrange piping and valves so the unit may be operated in reverse flow mode on the product side for fixed periods of time. This method is particularly well suited for steam-to-product units.

3. The use of strainers are recommended in supply lines ahead of the exchanger when the streams contain significant solids or fibers. This will reduce the requirements for back flushing.

Cleaning Guidelines

1. Never open the unit when hot, under pressure, holding liquid or operating.

2. Never clean the plates with a steel brush or steel wool.

3. Always wipe the gaskets clean before closing the unit to prevent damage resulting from adhering particulate matter.

4. Always use clean water (free from salt, sulphur, chlorine or high iron concentrations) for flushing and rinsing operations.

5. If steam is used as a sterilizing medium, do not exceed 270°F steam temperature with nitrile gaskets and 350°F with EPDM gaskets.

6. If chlorinated solutions are used as the cleaning media, employ a minimum concentration at the lowest temperature possible. Minimize the plate exposure time. The chlorine concentration must be less than 100 ppm and temperatures must be under 100°F with a maximum plate exposure time of 10 min. Follow the cleaning recommendations of suppliers, relative to concentration, temperature and treatment time.

7. Always add concentrated cleaning solutions to water before circulating through the unit. Never inject these solutions while the water is circulating.

8. Remove rusted or pitted areas that appear on the plates with commercial scouring powder. Follow this by flushing with clean water.

9. Cleaning solutions should always be circulated with a centrifugal pump.

10. Do not use hydrochloric (muriatic) acid for cleaning plates.

11. Thoroughly rinse the plates with clean water following any type of chemical cleaning.

TROUBLESHOOTING

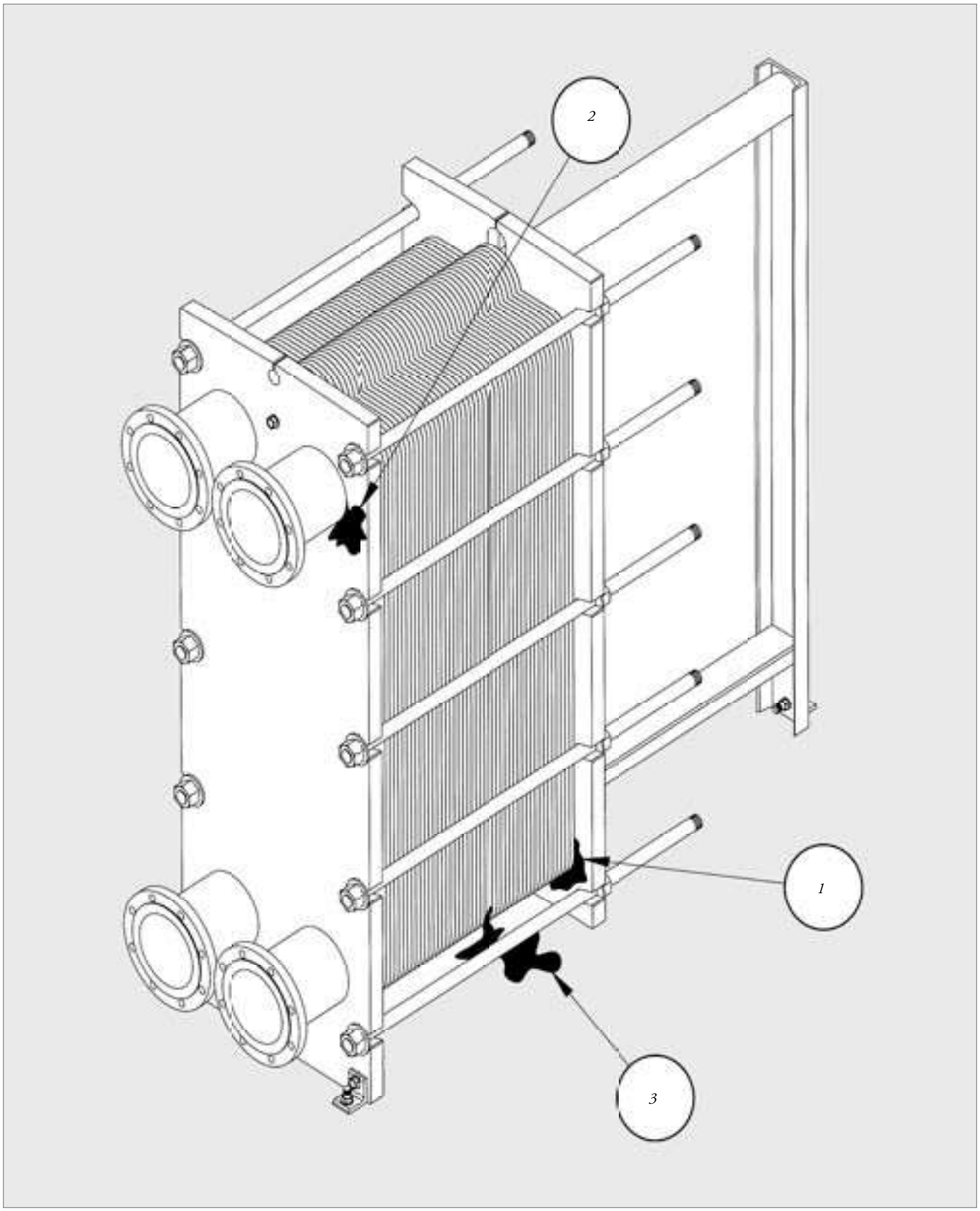

Figure 49
Troubleshooting sources of leaks.

Leakage Between the Plate Pack and the Frame

(See Figure 49, Item 1)

PROCEDURES AND OBSERVATIONS	SOLUTIONS
1. Use a felt tip marker to identify the area where the leakage seems to be occurring and then open the plate pack.	
2. If the leakage occurs in the area of a nozzle, then observe the gasket condition of the "D" plate or "E" nozzle "O" ring. Foreign matter, scars, other damage to the gasket surfaces and any gasket dislocation may be the problem.	Remove all foreign matter, relocate the gasket, or replace the damaged gasket.
3. Check the end frame for foreign objects, surface unevenness, or any other condition which might interfere with the seal between the gasket and the adjacent surface.	Remove any interference between the gasket and the surface of the end frame.
4. Check the plate for cracks or holes.	If a plate has perforation, it must be replaced.

Leakage Between the Nozzle and the End Frame

(See Figure 49, Item 2)

PROCEDURES AND OBSERVATIONS	SOLUTIONS
1. Fluid is flowing from the area between the nozzle and the end frame (point A on Figure 50) and/or the interior of the end frame and the seal plate (point B on Figure 50).	Check the integrity of the continuous pressure weld between the stub end and the seal point (point C on Figure 50). Dye-check for small cracks. If the dye-check reveals any linear indication, the area needs to be ground down and re-welded using TIG welding, and the appropriate welding wire. If the weld damage occurred due to a blow to the nozzle, some of the plate assemblies may be damaged. Damaged plates should be replaced.

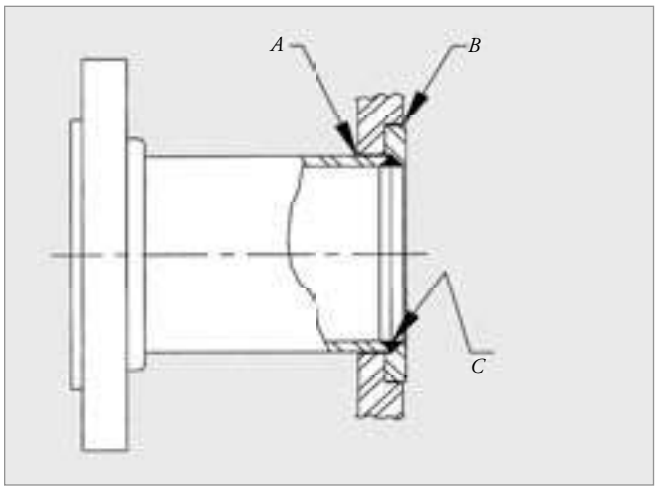

Figure 50
Troubleshooting nozzle/end frame leaks.

Leakage Between the Plates to the Outside of the Unit

(See Figure 49, Item 3)

PROCEDURES AND OBSERVATIONS	SOLUTIONS
1. Mark the area of the leak with a felt tip marker.	
2. Check the plate pack dimensions to insure they agree with Table 3. Overtightening may cause plate damage.	Depressurize unit and adjust the plate pack as necessary. Disassemble unit per procedure on page 31.
3. Look for mislocated, loose or damaged gaskets.	Relocate gaskets, reglue loose gaskets and replace damaged gaskets.
4. Check for plate damage in the area.	A damaged plate usually must be replaced. For temporary duty, if the damaged plate has four holes and an adjacent plate (front or back) has four holes, remove both plates and retighten the plate pack according to Table 3. Contact the factory if temporary operating characteristics need to be developed for a smaller number of plates. See "How to Find a Defective Plate" on page 43.
5. Make sure the plate pack sequence is A-B-A-B-etc., see Figure 15.	Inspect the plate pack for damage and place the plate assemblies in the correct order.

Mixing of Fluids

PROCEDURES AND OBSERVATIONS	SOLUTIONS
1. Make sure the piping is connected to the correct locations on the heat exchanger.	Relocate piping to the correct connections.
2. Make sure the plates are properly arranged on each adjacent plate according to the assembly drawing (A-B-A-B... arrangement).	Open the plate pack and replace the plate gasket assembly.
3. Make sure the gaskets are correctly oriented on the plates with the "bleed port" of each gasket facing away from the plate surface. See Figures 32 through 34.	Replace gaskets correctly.
4. Follow the steps described in "How to Find a Defective Plate" on page 43. If a leak is found, use a felt tip marker to locate the place.	Remove and replace as discussed on page 33. Inspect the plate pack for damage and place the plate assemblies in the correct order.

Increase in Pressure Drop or a Reduction in Temperature Reading

PROCEDURES AND OBSERVATIONS	SOLUTIONS
1. The pressure drop from the inlet to the outlet on one or both sides of the unit is too high compared to the original specified pressure change.	Try cleaning-in-place (CIP) as described in Figures 47 and 48. Check the accuracy of the instrumentation. Pressure taps should be installed 10 and 5 pipe diameters upstream and downstream, respectively, from flow disturbing source, i.e., elbow, valve, reducer, etc.
2. The temperature readings are correct for the process; however, the pressure drop is high.	The plate surfaces are clean enough, however, the inlet of the unit could be clogged. Back flushing the equipment or CIP may solve the problem.
3. The temperature readings do not correspond to the original temperature settings or specifications.	The pressure drop is probably also increasing. The change in the temperature readings indicates that there is a buildup of deposits on the plate surfaces. If CIP or back flushing the equipment does not work, the unit will need to be opened and the plates cleaned.
4. The pressure drop is too low, and the unit is known to be clean.	The pump capacity may be too small. Check the pump manual.

How to Find a Defective Plate With Through Holes

Severe corrosion may cause defect to occur. The following method is recommended to determine the location of the defective plate or plates:

1. Open the unit, remove all fouling from surfaces and dry the plates after cleaning. Make sure the bleed port areas (see Figure 32) are clear.

2. After completely drying the plates, reassemble the unit.

3. Supply water to one side ("A" side) and raise the water pressure to approximately 50 psig.

4. Open the drain valve at the lowest point or break the flange on "B" side. By removing the flange and fittings, it is possible to look into the nozzle and measure to the exact leaking plate.

5. Stop the test if water flows out of the drain valve or flange on "B" side.

6. Open all valves and empty the unit of all water.

7. Open the unit promptly and find which plate is wet on "B" side. This plate and the preceding plates may have defects.

8. The defect can be found by placing a lamp on the rear side of the plate and by observing the light that passes through.

9. If the defect is small, the use of dye penetrant may be required to locate the defect. Because of the metal to metal contact of the plates, the defect can be larger when the plate pack is compressed than when it is in the free state.

NOTE: **A unit with multiple pass circuits that does not allow the fluid to drain out of each channel on one side cannot be tested in this way unless the special center plates are first removed. See Figure 20 as an example.**

STORAGE PROCEDURES

When a SUPERCHANGER plate and frame heat exchanger is to be placed in storage for six months or longer, the procedures listed below must be followed:

1. If the unit has been recently shipped from our factory and is unused, disregard steps 2, 3 and 4; follow steps 5 through 10.

2. If the unit has been used and long-term storage is required, it must be completely drained. Prior to draining remove the optional shroud, if provided, and let the unit cool to ambient temperature. Units with plate packs arranged with one pass on each side (all nozzles on the stationary end frame) are self-draining. Simply vent at the upper nozzle location and drain from the lower nozzle for each side individually. A two pass/two pass or one pass/two pass plate arrangement is also self-draining, provided all two pass side nozzles are at the lower elevations (numbers S2, S3, M2 and M3). Other units may be self-draining if they have been fitted with separate drain and vent nozzles, or with vents and drain holes. Units that are not self draining must have the plate pack completely loosened to drain all liquids. Before opening the plate pack, wipe off the exterior surfaces to make sure no fluids or debris fall onto the plate pack.

3. Open the plate pack and thoroughly clean the unit internally and externally. Dry the unit. (Blowing dry, hot air at approximately 150°F on all areas is an excellent method.)

4. Install blind flanges with gaskets on all nozzles. Plug all other openings.

5. Coat all unpainted carbon steel component surfaces with light grease, SAE 30 oil or other rust inhibiting products.

6. Coat all bolt threads with light grease.

7. Loosening of the plate pack is not recommended. However, it is advisable that to avoid any compression set of the gaskets, the plate pack length dimension be adjusted. This should be greater than the unit's stated minimum tightening dimension (T.D.).

8. Protect the unit from direct sunlight, intense heat radiation or ultraviolet radiation by loosely covering the unit with an opaque, reflecting type plastic film or similar material. Make sure air is allowed to circulate around the unit.

9. It is preferable to store the unit indoors, well protected from the weather. The temperature in the storage area should ideally be 60°F to 70°F with a relative humidity of 70% or lower.

CAUTION: **Never store the unit in an area where the temperature is at 32°F or lower.**

10. All potential sources of Ozone, such as operating electric motors or welding equipment, should be removed from the storage area to preclude Ozone attack on gaskets. Gaskets should not be exposed to direct sunlight (ultraviolet radiation) and should be stored in dark plastic bags. Under proper storage conditions, gaskets generally have a shelf life of approximately four years.

MISCELLANEOUS INSTRUCTIONS

General Maintenance

It is recommended that tightening bolts and tightening nuts be lubricated periodically in order that they can be easily loosened at time of disassembly. The upper guide bars where the plates slide should be coated with a lubricant to avoid corrosion and to enable the plates to slide smoothly. Rollers in the moveable end frame and connecting frames should be lubricated with oil periodically.

EZCHANGER Hydraulic Closing Device

Disassembly and reassembly of your SUPERCHANGER plate and frame heat exchanger during maintenance operations using standard tools can be challenging and time consuming, particularly with larger units. The EZCHANGER Hydraulic Closing Device can easily cut your assembly/disassembly time by 50% or more. Call Tranter or your nearest Tranter representative for immediate pricing and delivery information.

Ordering Parts

When ordering parts or requesting information, always give the Model and Serial Number of the unit.

Refer to the parts list on your assembly drawing for correct nomenclature and numbers.

Returned Material

Units or parts are not to be returned without first sending pre-notification to the factory. Parts accepted for credit are subject to a service charge plus all transportation charges. Any items authorized for return must be adequately packed to reach Tranter at the address shown below without damage.

Damaged Shipments

Tranter's equipment is carefully packaged at the factory to protect it against the normal hazards of shipment. If Tranter equipment should arrive in a damaged condition, the customer must file a damage report with the carrier. A copy of this claim should be sent to:

Tranter, Inc.
1900 Old Burk Highway
Wichita Falls, TX 76306

Additional Information

For any additional information concerning the operation, care or maintenance of your SUPERCHANGER, feel free to contact our SUPERCHANGER technical specialists at one of our manufacturing locations. Visit our web site for parts quotations at www.tranter.com, or e-mail us directly at sales@tranter.com.

Tranter, Inc.
1900 Old Burk Highway
Wichita Falls, TX 76306
Tel. 1-800-414-6908 • Fax: 940-723-5131

Tranter International AB
Wakefield Factory
Tranter Ltd, Unit 50
Monckton Road Industrial Estate
Wakefield WF2 7AL England
Tel. +44-1924 298 393 • Fax: +44-1924 219 596

Tranter International AB
Regementsgatan 32
PO Box 1325
SE-462 28 Vänersborg Sweden
Tel. +46 521 799 800 • Fax: +46 521 799 822

Tranter India Pvt. Ltd.
Gat. No. 985, Sanaswadi Tal. Shirur
Dist.Pune -412 208 (India)
Tel. +91-2137 392 300 • Fax: +91 2137 252 612

Authorized Service Centers

To obtain additional information on operation and maintenance, contact your local Tranter, Inc., representative or the nearest Tranter, Inc., factory-authorized Service Center.

Tranter, Inc.
Factory/Sales/Engineering Office
1900 Old Burk Highway
Wichita Falls, TX 76306
Tel. 1-800-414-6908 • Fax: 940-723-5131
E-mail: aftermarket@tranter.com

Tranter Service Center
1213 Conrad Sauer
Houston, TX 77043
Tel. 1-800-414-6908 • Fax: 713-467-1502
E-mail: aftermarket@tranter.com

Tranter Midwest Service Center
30241 Frontage Road
Farmersville, IL 62533
Tel. 217-227-3470
E-mail: aftermarket@tranter.com

Tranter International AB
Wakefield Factory
Tranter Ltd, Unit 50
Monckton Road Industrial Estate
Wakefield WF2 7AL England
Tel. +44-1924 298 393 • Fax: +44-1924 219 596
E-mail: aftermarket@tranter.com

Tranter International AB
Regementsgatan 32
PO Box 1325
SE-462 28 Vänersborg Sweden
Tel. +46 521 799 800 • Fax: +46 521 799 822
E-mail: aftermarket@tranter.com

Tranter International AB
Käthe-Paulus-Strasse 9
Postfach 10 12 14
DE-31137 Hildesheim Germany
Tel. +49-512 175 2077 • Fax: +49-512 188 8561
E-mail: aftermarket@tranter.com

Tranter International AB
Via Ercolano, 24
IT-20052 Monza MI Italy
Tel: +39-039 28 282 210 • Fax: +39-039 834 315
E-mail: aftermarket@tranter.com

Tranter Ind e Com de Equipamentos Ltda
Av. Leonil Cre Bortolosso, 88 Galpão 1 -Vila Quitaúna
06194-971 Osasco, SP Brazil
Tel. +55 11 3608-4154
E-mail: aftermarket@tranter.com

Tranter India Pvt. Ltd.
Gat. No. 985, Sanaswadi Tal. Shirur
Dist.Pune -412 208 (India)
Tel. +91-2137 392 300 • Fax: +91 2137 252 612
E-mail: aftermarket@tranter.com

SUPERCHANGER

SUPERCHANGER units are plate and frame type heat exchangers consisting of corrugated heat transfer plates, frames, nozzles and tightening bolts. The corrugated plates are held in between the stationary and moveable frames and are compressed by tightening bolts. Optional shrouds are available on request.

The plates are equipped with elastomeric gaskets and have port holes pierced in the corners. When the unit is tightened, the gaskets seal the structure and, in conjunction with the port holes, allow fluids to flow in alternate channels and almost always flow counter-currently. The thin fluid interspace coupled with the corrugated plate design induces turbulence that produces extremely high heat transfer coefficients.

Plates are manufactured in standard sizes in virtually any material that can be cold worked. The size, number and arrangement of the plates is contingent upon the duty to be performed. Accordingly, the units are custom designed for each application.

SUPERCHANGER frames are provided in two basic designs, differing primarily in their support systems. One type uses an external support column (Models HP, UP, SP, MP and FP) while the other type uses a self-contained supporting pad (Models HJ, UJ, SJ and MJ). The "J" Models conserve more space, but have a limited plate capacity while the "P" Models can contain up to 700 plates in a single frame. (See Figures 1 and 2.)

NOTE: Information in this brochure is subject to change without notice. The manufacturer reserves the right to change specifications at any time.

NOTES

At the forefront of heat exchanger technology for more than 70 years

Tranter top quality, high-performance, proprietary products are on the job in demanding industrial and commercial installations around the world. Backed by our comprehensive experience and worldwide presence, Tranter offers you exceptional system performance, applications assistance and local service. Tranter is close to its customers, with subsidiary companies, agents, distributors and representatives located worldwide. Contact us for a qualified discussion of your needs.

TRANTER®
The heat transfer people

North/South America
Tranter, Inc.
Wichita Falls, TX USA
Tel: (940) 723-7125
Fax: (940) 723-5131
E-mail: sales@tranter.com

Europe
Tranter International AB
Stockholm, Sweden
Tel: +46 (0)8 442 49 70
Fax: +46 (0)8 442 49 80
E-mail: info@se.tranter.com

Middle East/Asia
Tranter India Pvt. Ltd
Pune, India
Tel: +91 20-30519300
Fax: +91 20-30519350
E-mail: sales@in.tranterphe.com

www.tranter.com

SC-IOM-11-0107 650531

© 2007 Tranter, Inc.

OPERATION
&
MAINTENANCE MANUAL

For

Vogt Power International Inc.
Heat Recovery Steam Generators

For

SPP ABPR Amata City CCCP Project
Amata B. Grimm Power (Rayong) 2 Limited

Vogt Power Project No. 17460

Vogt Document No. V17460-OMNE-001

VOLUME 6

OPERATION & MAINTENANCE MANUAL

For

Vogt Power International, Inc.
Heat Recovery Steam Generators

for

SPP ABPR Amata City CCCP Project
Amata B. Grimm Power (Rayong) 2 Limited

Vogt Power Project No. 17460

Vogt Power Document No. V17460-OMNE-001

Written By: Kathy Hugle

Reviewed By: Matt Kreis

Revision: 1
Date: 19 February 2013

The purpose of this manual is to suggest procedures for the operation and maintenance of the HRSG and its subsidiary parts. This guide does not cover all variations in equipment, nor does it provide for every possible requirement or contingency. The specific site conditions, staffing, accessibility, and interfacing equipment must be considered when implementing the information provided herein.

Refer to the Vogt Power International Erection Manual for specific information concerning unloading, storage, and installation of the equipment. Refer to the Vogt Power International Training Manual for operator training. Should other information be desired, or particular situations arise that are not addressed in this manual, the matter should be referred to Vogt Power International.

This manual describes the HRSG, its components and ancillaries to aid the Owner in its development of appropriate procedures for operating and maintaining the equipment. It also contains specific design and performance information, including drawings, equipment lists, and data sheets, purely for convenience. However, this document is not contractual, and should not be referred to in contractual matters.

This document contains minimum procedures for operating and maintaining the HRSG components and is intended to assist the operators in planning and scheduling operational and maintenance activities. It is not intended to and does not cover all details or variations in equipment, or provide for every possible contingency.

INDEX

VOLUME 1 – Vogt Power HRSG O&M Manual

SECTION I DESIGN DATA

Tab 1 - Drawing and Document List
Tab 2 - System Design Description
Tab 3 - Safety Valve Data
Tab 4 - Performance Data
Tab 5 - Start-up Procedure
Tab 6 - Gas Side Pressure Drop
Tab 7 - Heating Surface Data
Tab 8 - Boiler Feedwater and Boiler Water
Tab 9 - Performance Prediction

SECTION II OPERATIONAL PROCEDURES

Tab 1 - Safety Precautions
Tab 2 - Suggested Operational Procedure
Tab 3 - Removal from Service, Lay-up, and Long Term Storage
Tab 4 - Tube Failure Analysis
Tab 5 - Troubleshooting Procedures
Tab 6 - Maintenance Checklists
Tab 7 - Pressure Part Life
Tab 8 - Warranty, Inspection and Maintenance Reports and Forms

SECTION III COMMISSIONING PROCEDURES

Tab 1 - Preliminary Filling and Flushing
Tab 2 - Hydrostatic Test
Tab 3 - Alkaline Boilout
Tab 4 - Chemical Cleaning
Tab 5 - Steam Blow Cleaning
Tab 6 - Commissioning

SECTION IV SUBVENDOR MANUALS

Volume 2 – Diverter Damper

Volume 3 – Valves and Inline Components

Tab 1 - Control Valves
Tab 2 - Safety Valves
Tab 3 - General Service Valves
Tab 4 - General Service Valve Actuators
Tab 5 - Strainers
Tab 6 - Steam Sample Nozzles
Tab 7 - Instrument Valves
Tab 8 - Attemperators

Volume 4 – Instrumentation

Tab 1 - Transmitters
Tab 2 - Level Gauges and Remote Level Indicators
Tab 3 - Thermocouples & Temperature Indicators
Tab 4 - Pressure Gauges & DP Gauges

Volume 5 – Deaerator & Heat Exchanger

Tab 1 - Deaerator
Tab 2 - Heat Exchanger

Volume 6 – Miscellaneous Equipment

Tab 1 - Outlet Expansion Joints
Tab 2 - Inlet Expansion Joints
Tab 3 - Steam Silencers
Tab 4 - Pipe Supports
Tab 5 - Flow Elements
Tab 6 - Aircraft Warning Lights
Tab 7 - Stack Silencers

Flue Gas Solutions, Inc.

STORAGE, HANDLING, INSTALLATION AND MAINTENANCE MANUAL FOR B-STYLE (MOLDED CORNER) EXPANSION JOINTS

Prepared for

Vogt Power International

PO# V0004664

FOR

Toshiba's Amata City II Project
Vogt Power Job No. 17460

HRSG Outlet Duct Expansion Joint

Prepared by

Flue Gas Solutions, Inc.
19 Commons Ave.
Windham, Maine 04062

Phone: 207-893-1510
Fax: 207-893-1518

Flue Gas Solutions, Inc. Order # J-0766

VOGT POWER INTERNATIONAL
ReSubmit per Comments, Work May Proceed
Hugle, Kathy | Jan-16-2012

VOGT POWER INTERNATIONAL
V17460-EJXE-500-00
10-Jan-2012

TABLE OF CONTENTS

Section	Description	Page
1.0	INTRODUCTION.....	3
2.0	RECEIVING AND STORAGE.....	3 & 4
3.0	INSTALLATION INSTRUCTIOINS.....	5, 6 & 7
4.0	MAINTENANCE.....	7

1.0 INTRODUCTION

Flue Gas Solutions, Inc. B-STYLE Fabric Expansion Joints have been designed to absorb customer specified axial and lateral movements, including continual vibration, at gas temperatures specified by the customer.

The B-Style expansion joint fabric is supplied with factory hot-molded corners that mate with the duct flanges. They are shipped rolled and taped to reduce the shipping volume with clamping bars, fasteners, gasket and bolt in or weld in liners if required by the customer. Installation of this style requires minimal equipment and manpower.

2.0 RECEIVING AND STORAGE

Flue Gas Solutions, Inc., B-STYLE Fabric Expansion Joints have been prepared at the factory for short periods of outside storage. There are several precautions that should be taken to ensure that no damage is incurred during the storage period.

2.1 RECEIVING INSPECTION

Expansion joints must be packaged to arrive at the jobsite in good condition. The purchaser should, immediately upon receipt at the jobsite, verify that all parts shown on the packing list have been received undamaged. To insure proper performance and service life it is important to prevent damage by carefully handling and storing the expansion joint prior to installation.

2.2 PLACEMENT IN STORAGE

The storage environment and storage time is an important factor in the condition and performance of fabric expansion joints. The materials used in fabric expansion joints exhibit excellent resistance to various forms of environment attack; however, recommended storage practices must be observed and an awareness of deviations must be maintained. After prolonged storage (over one year), inspection by the supplier/manufacturer can assure that performance will not be affected. In case of storage abuse, expansion joint warranties are invalid. Special storage methods should be used when long-term field storage is anticipated for spare expansion joints.

2.3 LENGTH OF STORAGE

The storage warranty period is one year. Notify the supplier/manufacturer if storage period exceeds one year. Inspections should be made at least (60) days before anticipated installation. Notify the manufacturer if the start-up date is to be more than (12) months after the installation of the expansion joints. Notify the manufacturer if any unusual appearances are noticed when unpacking or installing the expansion joints.

2.4 INDOOR STORAGE RECOMMENDATIONS

Do store the expansion joints in their original shipping containers.
Do protect the containers from physical abuse.
Do store in cool and dry areas.
Do Not store where the temperature will exceed 150° F (65°). The ideal storage temperature is between 50° and 70° F (10° to 20° C). Expansion joints should not be stored near sources of heat such as radiators and base board heaters.

2.5 OUTDOOR STORAGE RECOMMENDATIONS

Do store the expansion joints in their original shipping containers.
Do protect the containers from physical abuse.
Do store at least one (1) foot above the ground in a cool dry area where flooding will not occur.
Do cover the containers with tarpaulin or heavy plastic to protect them from the weather.
Do Not store where the temperature will exceed 150° F (65°). The ideal storage temperature is between 50° and 70° F (10° to 20° C). Expansion joints should not be stored near sources of heat.

3.0 INSTALLATION INSTRUCTIONS

3.1 PRE-ERECTION REQUIREMENTS

The breach opening and ducting should be checked for proper alignment. The opening should not exceed the following tolerances; Axial +1/4", -1/2; Lateral ½" If the breach opening exceeds these tolerances then the expansion joint manufacturer must be notified. Mounting flanges or the expansion joint attachment area of the ductwork must be clean, flat and parallel. All welds must be ground smooth at attachment points. The area around the ductwork must be cleared of any sharp objects and protrusions. If not removable they should be marked for avoidance. The expansion joint and components should be kept packaged until immediately before installation. If any handling devices such as crane hooks or forklifts are utilized in handling the expansion joints, cushioning materials must protect the contact surface. If weld or burn operations are being performed in the vicinity of the exposed expansion joint, fabric welding blankets or other protective covering must be used. These covers must be removed before start-up.

3.2 INSTALLATION

It is important that the expansion joints be installed at the proper face-to-face dimension as specified by the manufacturer. Never extend, compress or laterally distort expansion joints to compensate for dimensional errors without the manufacturers concurrence. When an expansion joint must be compressed or laterally preset, call the manufacturer for detailed instructions for installation. All expansion joints provided with baffles or flow liners will have flow arrows for assisting the installer to properly orient the expansion joint flow direction. Care must be taken to assure back up bar ends closely butt up to each other (within 1/8") and DO NOT overlap. Install the expansion joint fasteners to the torque shown on the drawings or (25 to 35 FT-LB). If impact tools are used then they must have torque-limiting devices properly set before use. DO NOT install insulation over the expansion joint or mounting areas unless it is in accordance with the manufacturer's instructions. In areas where spontaneous combustion dust can accumulate on the fabric, protective shields may be required. Consult the manufacturer for details and requirements for a shield. Improperly installed shields may help elevate the temperature of the fabric and cause premature failure. Proper installation of the expansion joint is critical to the service life of the product and should be checked by the installer.

3.2.1 GASKET (Low Temperature <600° F.

The common gasket for the thin Texfilm/TEX-LFP materials is the PTFE joint sealant gasket tape. It is a white material usually supplied with adhesive backing for ease of installation directly to the mating flange. Remove the adhesive protective strip and apply the gasket on the cleaned duct flanges to the gas side of the mounting holes. This will prevent gas leaking through the bolt holes. Gasket size is normally 1/16” Thick X ½” Wide.

3.2.2 GASKET (High Temperature >600° F.

The high temperature joints are manufactured with a fiberglass cuff material and may not require additional gasketing. The liner to frame connection will require gasketing and a 1/8” X 3” bolt hole gasket is normally used and supplied with the joint. Spray adhesive is used to install the gasket to the mating flange. Spray both the flange and gasket and allow it to get tacky prior to positioning and pressing over the flange bolt holes.

3.2.3 FABRIC

Various fabric materials are used in the manufacturing of molded corner style expansion joints. The base material may be fiberglass-reinforced elastomer (VITON, Chlorobutyl, EPDM), fiberglass reinforced PTFE (Texfilm, LFP, PTFE) or insulated LFP with additional insulation heat bonded to the surface (Thermalam products). Elastomers and Thermalam products are self-sealing against the duct flanges. The reinforced LFP materials are relatively thin and should be installed with the PTFE gasket.

3.2.4 LINERS:

These expansion joints may be supplied with bolt-in or weld-in liners to provide erosion protection for the fabric. The bolt-in liner will mount to the upstream side of the duct flange and gasket described above may be used. Another gasket strip may be used on the fabric side of the bolt-in liner for the Option 1A joint. It also may be best to position the fabric over any one-piece liner prior to positioning the liner for factory spliced endless belts. The weld-in liner may be welded to the duct inside or the duct flange.
NOTE: Protect the fabric from weld burns with a fiberglass welding blanket or other suitable material.

3.2.5 EXPANDED METAL COVER

The expanded metal cover will install after the expansion joint has been installed. There are mounting tabs attached to the inlet frame with weld studs. The cover will mount over these studs and attached using the washers and nuts provided.

<u>Do not use a cutting torch near the fabric.</u>

4.0 MAINTENANCE

Flue Gas Solutions, Inc. fabric expansion joints require minimal maintenance attention. Fasteners should be checked after the first month of service to insure proper tightness (between 25 & 30 ft/lb. maximum). Annual spot-checking of the clamping fasteners for tightness is then required. Annual visual inspection for any surface damage is recommended. Also at this time, look for any unusual lateral joint movements indicated by excessive fabric stretching in one direction. Make sure the outer fabric surface is exposed to an ambient air environment and assure no debris collects on any fabric surface and is never insulated over.
Any questions concerning the joints installation please call Flue Gas Solutions, Inc. at (207) 655-3016

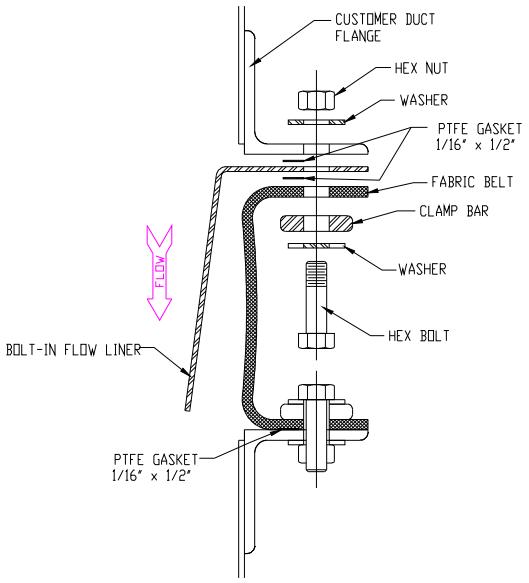

BALTEC INLET & EXHAUST SYSTEMS
BALTEC IES PTY LTD
ABN 71 124 484 108

4/35 Gilbert Park Drive, Knoxfield, Victoria, 3180 Australia
Telephone : +61 3 9763 6711 Fax : +61 3 9763 6799
www.baltecies.com.au

Expansion Joint Maintenance

This is a generalised document for all Fabric Belt-Type Expansion Joints supplied by Baltec IES. In order to ensure a long working life following installation of the expansion joint, it is recommended to adhere to the following regular maintenance and inspection items:

ITEM	PROCESS	EXECUTION PERIOD
Fabric Belt	A visual inspection of the fabric belt should be undertaken to check for any signs of punctures, tears or burning. Any defects which are discovered should be advised to Baltec IES to assess further action.	12 Months or 100 GT starts (whichever comes first)
Belt Clamping Bars	The tension of the nuts holding the belt clamping bars should be checked against specifications. Any loose nuts should be re-tensioned to ensure gas-tight sealing between the belt and frame.	12 Months or 100 GT starts (whichever comes first)
External – Paintwork	Paint on the outside of the Expansion Joint flanges is to be visually checked for any signs of blistering, flaking or corrosion. Any identified areas are to be touched up using appropriate paint.	12 Months or 100 GT starts (whichever comes first)
Internal – Liner Plates	The general condition of the expansion joint 409 stainless steel liner plates should be checked during each GT shutdown.	Every GT shutdown

End of Document

VOGT POWER INTERNATIONAL
V17460-ADXE-504-00
15-Feb-2013

INSTALLATION OPERATING & MAINTENANCE MANUAL

Manufacturer:	**Client:**
Aarding Thermal Acoustics B.V.	**Vogt Power International**
Industrieweg 59	**4000 Dupont Circle**
8071 CS Nunspeet	**Louisville, KY 40207**
The Netherlands	**USA**
Ref. Nr.: P09225	**Ref.Nr.: PO V0004344**
Document No.:	**P11247-65-0400**
Project name:	Amata City-2
Equipment:	5 Steam Vent Silencer(s)
Year of Manufacture:	2011

VOGT POWER INTERNATIONAL	
Released, Work May Proceed	
Hugle, Kathy	Nov-02-2011

VOGT POWER INTERNATIONAL
V17460-SIXE-500-00
20-Oct-2011

ATA-FO-6.055-rev1

	WARNING:	This manual should be used in conjunction with national laws. It is a mandatory part of the Steam Vent Silencer (SVS) and, according to the present laws, should be available for consultancy throughout the lifespan of the Steam Vent Silencer. The manual should be kept nearby the SVS in a safe, dry and sheltered place. It should be available for consultancy at all times. In case the manual is damaged or lost a new copy can be obtained from Aarding Thermal Acoustics B.V.

Aarding Thermal Acoustics B.V. (ATA)
P.O. Box 65
8070 AB, Nunspeet (NL)
Tel: +31-341-252635
Fax: +31-341-262112
Website: Http://www.ata-bv.com

All rights reserved. No part of this publication may be reproduced, stored in a retrieval system or transmitted in any form or by any means, without the prior permission in writing from Aarding Thermal Acoustics B.V.

Aarding Thermal Acoustics B.V. cannot accept responsibility for errors or omissions.

CONTENTS

0. Preface
   - 0.1 Purpose of the manual
   - 0.2 Focus group
   - 0.3 Lay out of the manual
1. Introduction
   - 1.1 Description of the SVS
   - 1.2 Purpose of use
   - 1.3 Operating conditions
   - 1.4 Operating personnel
2. Safety
   - 2.1 Preface
   - 2.2 Residual risk and hazards
   - 2.3 Safety devices
   - 2.4 Safety precautions
3. Installation and first start (commissioning)
   - 3.1 Preface
   - 3.2 Inspection before first use
4. Cleaning and maintenance
   - 4.1 Preface
   - 4.2 Maintenance / Inspection
   - 4.3 Inspection

APPENDIX I GA Drawing (s) (P11247-65-1010/1020/1030)
II Installation instruction for SVS (P11247-65-0401.r0)
III Storage procedure and offloading procedure

0. Preface

0.1 Purpose of the manual

This manual contains the necessary information for operation, maintenance, handling, transport, storage, erection, commissioning, repair and disassembly of the SVS.

All personnel responsible for operating and maintaining the SVS has to read and understand this installation, operating & maintenance manual (IOM). In order to prevent and reduce the risk of dangerous situations Aarding Thermal Acoustics B.V. cannot accept responsibility for dangerous situations as a result operating the SVS under conditions other than stated in Appendix I. Special attention should be given to recommendations in this manual.

0.2 Focus group

This manual is intended for personnel who will assemble, install and maintain the SVS. This manual indicates how the SVS should be used. Additionally the manual gives an indication of the maintenance intervals and it provides suggestions for proper maintenance of the material.

0.3 Lay out of the manual

This manual consists of separate chapters; each chapter has its own (separate) focus group. It goes without saying that all chapters in this manual are important, not only the chapters referring to certain tasks: persons working with the SVS in any way should be familiar with the contents of the complete manual.

In this manual the following pictograms are used:

	Hint:	This symbol indicates special information on either the best possible use of the SVS or how to facilitate operation of the SVS.

	Mind this:	This symbol indicates potential problems. Comply with the instructions in order to avoid these problems.

	WARNING:	This symbol indicates potential dangers to either the SVS or people. Comply with the instructions in order to avoid damage or injury.

1 Introduction

1.1 Description of the SVS

Blow-off silencers

For the acoustics market ATA develops sound absorbers and blow-off silencers. These sound absorbers and silencers ensure that people can live and work peacefully in the vicinity of industrial installations. When steam and gases escape under high pressure a lot of noise is made. Noise levels from 100 to 150 dB(A) are therefore not unusual. The exact moment of blow-off cannot be predicted when safety devices are used, which means that shock reactions can occur. When gases or steam are being blown off (e.g. discharging of autoclaves) the present environmental regulations require the use of a silencer or muffler. This ensures that the noise emission standard is not exceeded. Use of an ATA blow-off silencer, type AAT, ensures that the noise production is kept to an acceptable level. During the blow-off a considerable amount of energy is released within a short time. This fact imposes stringent requirements on the construction of a blow-off silencer. ATA, working in close co-operation with ATDEC and TIG, has developed the so-called “AAT- silencer”. Both the construction and the soundproofing meet the most stringent requirements. Thanks to the compact design the dimensions and the weight are both kept to a minimum. With this type of silencer acoustic insulation values as low as 60 dB(A) can be achieved.

The silencer type AAT is based on the principle of allowing gas or steam to escape through a large number of very small openings. Resulting in high-frequency sound. Often this sound lies wholly or partially above the limit of audibility - the so-called transformation principle. The remaining, undesirable sound is muffled by sound absorption.

1.2 Purpose of use

The SVS is designed for venting clean steam under conditions as stated in Appendix I. Using the SVS other than stated in this manual, can cause an unsafe working situation that is not safe for either the SVS, the steam system or the operator(s).

1.3 Operating conditions

Any application, other than specified in Appendix I or one going beyond the specified capacity is unauthorised. ATA is not liable for damages resulting from inappropriate conditions. The consequences are for the end-user.

1.4 Operating personnel

The SVS is designed using state-of-the-art technology and is in line with current safety regulations. However, the general risk of personal injury or damage to the SVS cannot be completely eliminated. Therefore the SVS may only be operated and assembled by competent and qualified personnel and only be used for the specified application. Therefore a careful study of this manual should be made before attempting to use or service the SVS, and particular attention should be paid to the safety instructions.

2 Safety

2.1 Preface

In this chapter the safety instructions in relation to the SVS will be explained. A careful study of this chapter should be made before attempting to operate or service the SVS.

	Hint:	If safety instructions mentioned in this chapter are not clear, contact ATA for more information.

The most important risk and hazards in relation to use of the SVS are summarised in § 2.2. In § 2.3 the safety devices are described with which the SVS is completed. Next in § 2.4 the safety precautions which the operator of the SVS has to adhere to are explained.

2.2 Risk and hazards

The following risk and hazards in relation to the SVS can be indicated.

- Direct or indirect contact with steam flow while steam vent is in operation.
- Direct or indirect contact with hot surfaces.
- Direct or indirect contact with hot water from drain.
- Shock reaction due to noise when the SVS starts to vent.
- Moving parts due to thermal expansion.

In the design of the SVS we reduced these above mentioned risks as much as possible; the safety devices to ensure safe operation are mentioned in § 2.3. In addition to the above the operator should follow the safety precautions stated in § 2.4.

2.3 Safety features

In order to obtain a safe working condition of the SVS the following features are included in the design of the SVS:

- SVS are normally placed on top of the boiler and the steam coming out of the SVS will be guided upwards.
- The drain is equipped with a pipe in order to connect it to the draining system.
- Suitable clearances for thermal expansion are used to minimise the risk of injury.
- The SVS is equipped with an “earthing” connection.

2.4 Safety precautions

For using the SVS in a safe way it is necessary to adhere to a number of safety precautions; the precautions are summarised below.

GENERAL

- It is advisable to apply thermal insulation on the outside of the silencer housing for personnel protection.
- Local rules and plant rules, in operation for general safety, should be adhered to.
- If the boiler is in operation; **maintain a safe distance from the SVS of minimal 10 m (30 ft).**

WARNING: Inspection, cleaning and maintenance should only be carried out during boiler maintenance periods. During these periods one is certain that the SVS will **NOT** go in to operation.

PERSONAL PROTECTION

- ATA recommends the use of safety shoes, protective gloves, ear protection, safety glasses and helmet while in close proximity to the SVS.

PREPARATIONS FOR SAFE OPERATION AND PRECUATIONS DURING INSPECTION CLEANING AND MAINTENANCE

- The SVS may only be operated or assembled by competent and qualified personnel and only be used for the specified application. Therefore a careful study of this manual should be made before attempting to install, operate or service the SVS.
- Before the SVS is put into operation verify that all safety precautions have been taken, checked and in operation.

3 Installation and first start (commissioning)

3.1 Preface

In this chapter information is given about the preparation for use of the SVS. In Appendix II the main steps for the installation are described. In § 3.2 the checkpoints are given for the inspection of the SVS prior to the commissioning of the SVS.

3.2 Inspection before first use

Check the SVS with respect to the following points:

- Check if the vent area above the silencer is free.
- Check if the piping is installed correctly. (Pipe and core element should correspond)
- Check if external insulation has been applied on piping and silencer housing. (If relevant)
- Check if operating conditions are as described in the Appendix I.

4 Cleaning and maintenance

4.1 Preface

The SVS is designed in such a manner that maintenance can be kept to a minimum.

4.2 Maintenance

	WARNING:	The SVS may only be maintained and (dis-)assembled by competent and qualified personnel. Therefore a careful study of this manual should be made before attempting to service the Steam Vent Silencer, and particular attention should be paid to the safety instructions. Maintenance work is only allowed during boiler maintenance periods.

	WARNING:	Make sure that there is no pressure build up in the SVS before starting with maintenance work. Check if the pressure in the SVS equals the ambient pressure.

4.3 Inspection

Daily

- Where practical possible before use; a visual inspection of the SVS for defects.

Once each month

Particular attention should be paid to the following points:

- Check for dirt build-up in the drainage pipe.
- Check the thermal expansion system of the inlet pipe.
- Check if fixation of the SVS still is correct.
- The presence of all the safety precautions.

Once each year

- Check if the acoustic absorption material is in place.
- Check if the SVS is working within the conditions described in the Appendix I.
- Corrosion check on silencer inlet pipe.
- Corrosion check on silencer casing.

Appendix III

Steam Vent Silencer(SVS)
Storage Procedure and Offloading Procedure

Storage Procedure:
Storage requirement for the SVS is C

Offloading Procedure

Offloading of the materials can be done by:

1. Lift Truck, the capacity depends on the weight of the silencer
2. Hoisting Crane and hoisting rope

Storage Requirements:

A = Storage Outdoor

B = Storage Under Shelter

C = Storage Indoor

D = Storage Indoor Temperature Controlled

PIPE SUPPORTS LIMITED

Unit 22, West Stone,
Berry Hill Industrial Estate,
Droitwich
WR9 9AS
United Kingdom

Telephone +44 (0) 1905 795500
Fax: +44 (0) 1905 794126
E mail: psl@pipesupports.com
www.pipesupports.com

Erection & Maintenance Manual

Variable Effort Support

Manual No: EM – VE - 01

Revision; 03

Dated; 16/08/11

Page; 1 of 7

Author; S Barry

Signed; M Collingwood

REV	DATE	DESCRIPTION	RAISED	APPRD
01	10/02/09	Address revised	AK	MC
02	15/06/11	Drawing to revision 4	FP	SJB
03	16/08/11	Format revised	AC	MC

VOGT POWER INTERNATIONAL
Released, Work May Proceed
Hugle, Kathy Jul-02-2012

VOGT POWER INTERNATIONAL
V17460-PSXE-500-00
14-May-2012

Erection & Maintenance Manual

Variable Effort Support

Index

Section	Description	Page
1.0	Introduction	3
2.0	Erection procedure	4
3.0	Maintenance	6
4.0	Storage	6
Appendix 1	Typical drawing	7

Erection & Maintenance Manual

Variable Effort Support

1.0) INTRODUCTION

This manual gives guidance and recommendations for the erection, commissioning and subsequent maintenance of variable effort supports.

Unlike their more sophisticated relatives the constant effort support, variable effort supports are simple devices that allow a degree of flexibility in the supported equipment. They are in fact a spring balance that for an increase in load, yield a corresponding change in compressed length in direct relation to the spring stiffness.

The criteria for selecting variable effort supports falls in to three general categories, firstly the load and displacement for which the support has to cater, secondly the physical arrangement of the support, be it top hung or base mounted, and finally the allowable deviation in load that the pipe can sustain.

Load and displacement are inseparable from allowable deviation since the latter is a direct function of the design load, the thermal displacement and the spring stiffness is expressed as “the change in load due to thermal displacement with respect to the design load in the operating condition”.

BS3974 sets down guidelines on the limit of deviation though generally it is determined by the pipe work stress engineer and can vary for individual support position. As a general rule it should not normally exceed 20%.

$$\text{Where: Deviation (\%)} = \frac{\text{displacement x spring stiffness x100}}{\text{Operating load}}$$

It is essential that the support is erected in the correct position; error at the erection stage can cause a re-distribution of the load and make it virtually impossible to ‘balance’ the supporting system.

When selecting the support at the design stage it is important that any additional load be added to the nominal design load of the supported part; large pipe clamps, spreader beams, the self weight of DS type tandem supports or even long hanger rods can impose significant increases in dead weight.

2.0) ERECTION:

2.1 Variable effort supports rely on the freedom of movement of the spring and its compression plate; lack of adequate protection during storage, rough handling and abuse will significantly reduce the ability of the support to perform.

2.2 The support should be carefully lifted into its nominated position and secured using appropriately sized fixing bolts.

2.3 Attachment to the supported pipe work is made via the hanger rod and pipe clamp in the case of suspension type supports and via the plinth in the case of compression type supports. The pipe work should be accurately adjusted to its correct elevation using either the turnbuckle or the height adjustment nut.

2.4 If the pipe work is to be lagged with thermal insulation after the supports have been erected, the piston plate locking nuts, which are located above and below the piston plate on either side of the spring housing, should not be retracted from their original position i.e. in contact with the piston plate until lagging is complete.

2.5 If the pipe work is to be subject to hydrostatic testing, this must take place with the piston plate locking nuts, which are located below the piston plate on either side of the spring housing, still in their original position i.e. in contact with the piston plate. Standard spring supports are designed to withstand an increased load during hydrostatic testing of up to twice the maximum load for the spring support.

2.6 Due to the variable nature of these devices and the need to support the pipe work at it's optimum load when operating it is necessary to either over support or under support when installing a variable and in effect pre-stress the pipe work such that during thermal expansion it moves to a neutral state of stress. This is achieved by allowing moments at anchor and terminal points to cater for the variance whilst the pipe is in the 'cold' state and has greater elastic durability.

2.7 Once satisfied that the pipe work is at its correct elevation the process of 'balancing' the system can commence. If the original assessment of weight distribution was correct, the pipe has been supplied to the nominal weight, valves and lagging are at their theoretical weight and all the supports are in their correct position then it is simply a case of undoing the locking nuts and walking away! However this is rarely the case.

2.8 The process of balancing the supporting system is very much an iterative one, adjustment to one support may manifest in a change at another two or three positions away. It is best to work between fixed support positions or terminal points and work towards the centre where the piping is most flexible.

2.9 To determine whether a support is in balance or not it is necessary to observe the piston plate locking nuts found on threaded rods running the full length of

the spring canister with the piston plate sandwiched between each pair. For balance these nuts should all be relatively free to be unwound away from the piston plate leaving the support in a static, self-supporting state. If this is the case for any particular support we strongly recommend that the nuts should be wound only 5mm away from the plate at this stage. This is simply a precaution to avoid the pipe work moving far away from it's set position if subsequent supports are not truly balanced.

2.10 If the support is not in balance then either the lower (spring side) locking nut or the upper locking nut will offer significant resistance to turning. Should it be that the lower nut will not rotate then this signifies that the dead weight is greater than the effort being provided by the support. To compensate for this it is either necessary to lower the pipe slightly by releasing the turnbuckle or lowering the load pad, or by raising the pipe slightly on adjacent supports. The intention being to release the dead weight sufficiently to release the locking nuts. For base mounted supports the height adjustment nut is found immediately below the load plinth. Should the upper nut be difficult to rotate then the opposite should be applied.

NB. We recommend that this adjustment should not be carried out in total isolation; at least five consecutive supports should be worked on simultaneously to avoid introducing local stresses into the pipe work.

2.11 Subsequent supports should be balanced in the same way however it is necessary to continually check back to previous supports to ensure that the effect of changing supports towards the centre of the pipe run does not alter previously balanced supports. If this is the case then suitable adjustments should be made to overcome this and return these supports back to their correct position.

2.12 When all supports are floating, the locking nuts should be backed off fully to allow the system to operate correctly.

2.13 Where the variable effort support incorporates a limit stop (Reaction force receiver), the lower locking nuts will be positioned at a distance from the spring compression plate as shown on the support detail drawing.

2.14 Prior to operating the plant we recommend that all supports are checked to ensure -

- The locking nuts are fully retracted.
- No debris has been allowed to fall into the support, especially in the spring housing.
- The support is free from visual damage and fixing bolts are firmly secured.

We also suggest that a cold survey after installation and hot survey during normal operation of the plant is carried out to record the installed elevation of the pipe work and the indicated setting of the supports.

3.0 MAINTENANCE:

3.1 Variable effort supports are designed to be maintenance free, however common sense should prevail; threaded items require greasing at intervals to suit the environment, periodic inspections are necessary to ensure the supports have not been damaged or obstructed by such items as temporary scaffolding, additional equipment or debris that may have fallen into the unit. Protective coatings should be periodically inspected and if necessary repaired.

3.2 Unfortunately due to the wide- ranging environments these devices are employed in, it is impossible to compile a fully comprehensive maintenance procedure. It should be remembered that variable effort supports are mechanisms and the health and longevity of the piping system depends on the reliable operation of the pipe supports.

4.0 STORAGE:

4.1 Supports should be handled with care and stored in a dry and dust free environment, preferably off the floor and under cover.

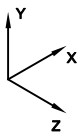

REVISIONS

SUSPENSION TYPE VARIABLE EFFORT SUPPORT

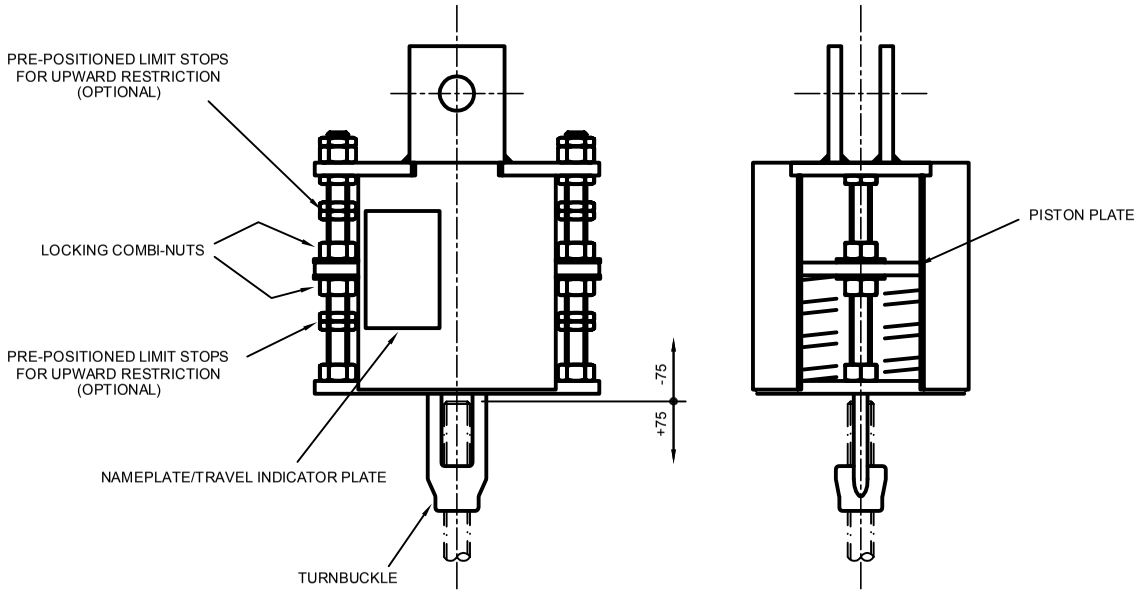

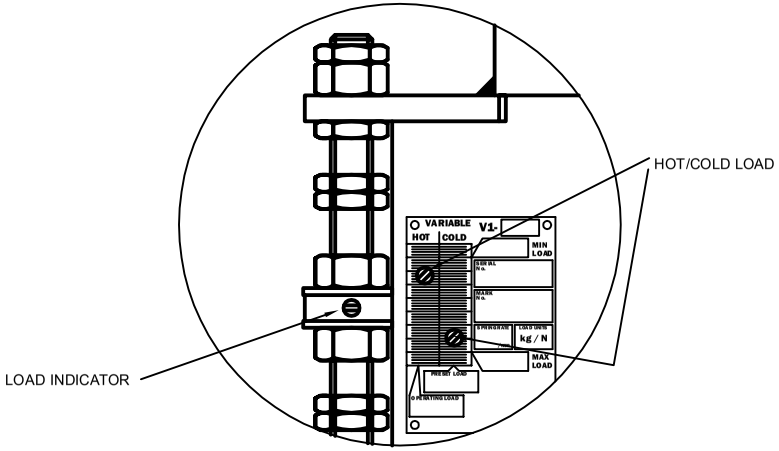

COMPRESSION TYPE VARIABLE EFFORT SUPPORT

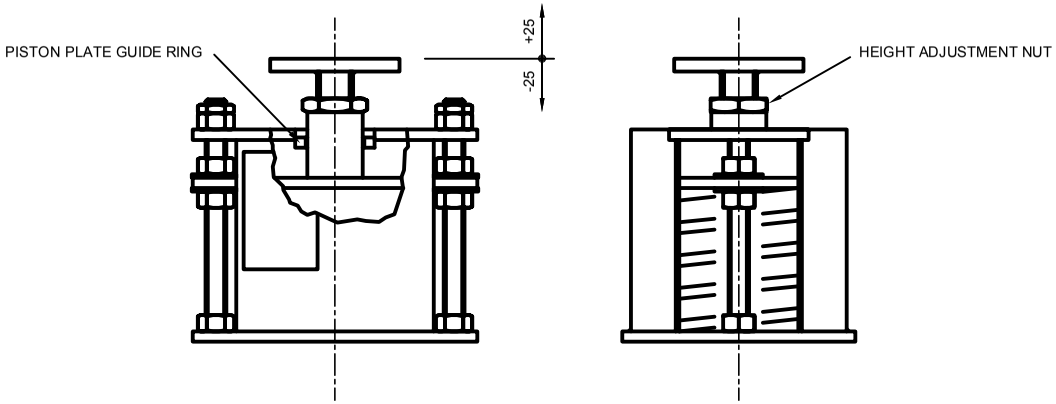

REV 4	M.HOLDEN	14.06.11
RE-DRAWN		
REV 3	M.HOLDEN	09.04.01
TEXT REVISED		
REV 2	M.HOLDEN	06.04.98
VIEW SHOWING GUIDE ADDED		
REV 1	M.HOLDEN	19.11.96
LIMIT STOPS ADDED TO DRG		

LOCATION PLAN

PIPE SUPPORTS LIMITED
UNIT 22 WEST STONE
BERRY HILL IND. ESTATE
DROITWICH
WORCESTERSHIRE
UNITED KINGDOM
WR9 9AS
Tel: +44(0)1905 795500
Fax: +44(0)1905 794126
EMail: PSL@PipeSupports.com

CUSTOMER	SEE CLIENT SPECIFICATION
PROJECT	
PIPE SYSTEM	
CUSTOMER ORDER NO.	
CONTRACT No.	
FINISH	
THREAD FORM	ISO-COARSE-METRIC
SCALE	NTS

TITLE	VARIABLE EFFORT SUPPORT	DRAWN	M.HOLDEN	DATE	17.04.98
SUPPORT MARK No		CHECKED		DATE	
No ASSEMBLIES	DRAWING No	VARIABLE PARTS		REV	4

PIPE SUPPORTS LIMITED

Unit 22 West Stone
Berry Hill Industrial Estate
Droitwich
WR9 9AS

Telephone +44 (0) 1905 795500
Fax: +44 (0) 1905 794126
E mail: psl@pipesupports.com
www.pipesupports.com

Site Storage Manual

Variable Effort Supports; Constant Effort Supports; HD PUF/Isocast Supports; Hydraulic Snubbers; Slide Bearings; Ancillaries, Rigid supports and Steel Work

Manual No; EM-SS-01

Revision; 01

Dated; 16/08/11

Page; 1 of 6

Author; AK

Signed ; M Collingwood

REV	DATE	DESCRIPTION	RAISED	APPRD
01	16/08/11	Format revised	AC	MC

VOGT POWER INTERNATIONAL
Released, Work May Proceed
Hugle, Kathy Jul-02-2012

VOGT POWER INTERNATIONAL
V17460-PSXE-501-00
14-Jun-2012

Index

Section	Description	Page
1.0	Aim	3
2.0	Scope	3
3.0	Responsibilities	3
4.0	Site Storage, Handling and Dismantling	3
5.0	Erection & Maintenance	4
6.0	Site Storage & Handling Instructions	5

1.0 Aim

1.1 The aim of this manual is to provide guidelines for site storage and handling of supports manufactured and supplied by Pipe Supports Ltd.

2.0 Scope

2.1 This manual covers the site storage & handling requirements for the following products.

- Variable Effort Supports
- Constant Effort Supports
- HD PUF/Isocast Supports
- Slide Bearings
- Hydraulic Snubber
- Ancillaries, Rigid Supports & Steel work

3.0 Responsibilities

3.1 Pipe Supports Limited (PSL) shall be responsible for ensuring that the goods are adequately packed and protected taking in to account the method and duration of shipment.

3.2 Supports shall be shipped fully assembled where ever practicable.

3.3 The Client or his agent shall assume responsibility for the goods once they have been received at the contractual delivery point.

3.4 The Client or his agent shall be responsible for ensuring that the requirements of this manual are complied with.

4.0 Site Storage; Handling & Dismantling Instructions

4.1 Supports should be handled with care and stored in a dry and dust free environment. Refer to Sec.6.0 of this manual for further guidelines specific to various products.

4.2 Variable & constant supports are factory preset at despatch condition. Do not change the load settings with out consulting the piping engineer responsible for the system.

4.3 Ensure that Pins/Bolt nuts in Structural and Pipe attachments are dismantled only during installation at site in order to avoid loss of such small parts.

4.4 Packaging should be reinstated after any Goods Inward Inspection at site until they are required for use.

4.5 Do not paint Name/Scale plates.

4.6 Refer to Support GA Drawings for the arrangement details.

4.7 Do not cut, drill or modify the support components with out consulting the piping engineer responsible for the system and PSL.

4.8 If any damage has occurred to the supports during transit, inform PSL as soon as the goods are received.

5.0 Erection & Maintenance

5.1 Care must be taken during welding of support components to the structure as to avoid damage to critical components such as springs, PTFE pads etc.

5.2 Care must be taken to not exceed the recommended torque values for tightening the clip hardware in PUF/Isocast supports.

5.3 Refer to appropriate PSL Erection & Maintenance Manuals for the precautions to be taken during Erection of these supports.

6.0 Site Storage & Handling Instructions

Product Description	Site Storage Instructions	Site Handling Instructions
Variable Effort Supports	Store in a dry dust free environment, preferably off the floor and under cover.	Handle with care to avoid damage to components, threads and protective coating. Take care not to damage the name/scale plates.
Constant Effort Supports	Store in a dry dust free environment, preferably off the floor and under cover.	Handle with care to avoid damage to components, threads and protective coating. Take care not to damage the name/scale plates.
HD PUF/Isocast Supports	Store off the floor and under cover. Protect from exposure to direct sunlight, wind and water.	Do not lift in a manner that imposes high localised pressure on the foam element or protective coating. Handle shoes only with soft slings or by hand and attach only to the steel parts of the assembly. Take care not to tear or pierce the vapour seal. Avoid Sharp blows due to hammering, dropping etc as this may cause cracking or chipping. Avoid contact with flames or temperatures in general above 160˚C.

Product Description	Site Storage Instructions	Site Handling Instructions
Slide Bearings	Store off the floor and under cover. Protect from exposure to direct sunlight, wind and water.	Handle with care to avoid damage/scratch to PTFE and polished surfaces. Avoid contact with flames or temperatures in general above 120˚C. Avoid ingress of dirt on to bearing surfaces.
Hydraulic Snubber	Store off the floor and under cover. Protect from exposure to direct sunlight, wind and water. Snubbers should be stored with the shipping plug/vent plug in the uppermost position.	Handle with care to avoid damage due to rough handling. Avoid contact with flames. Avoid sharp blows or dropping as this may cause damage to the components.
Ancillaries, Rigid Supports and Steel work	Store in a dry dust free environment, preferably off the floor and under cover.	Handle with care to avoid damage to components, threads and protective coatings.

PIPE SUPPORTS LIMITED

Unit 22, West Stone,
Berry Hill Industrial Estate,
Droitwich
WR9 9AS
United Kingdom

Telephone +44 (0) 1905 795500
Fax: +44 (0) 1905 794126
E mail: psl@pipesupports.com
www.pipesupports.com

Erection & Maintenance Manual

Rigid Struts

Manual No: EM – RS - 01

Revision; 02

Dated; 16/08/11

Page; 1 of 5

Author; M.Lewis.

Signed; M Collingwood

REV	DATE	DESCRIPTION	RAISED	APPRD
01	10/02/09	Address revised	AK	MC
02	16/08/211	Format revised	AC	MC

VOGT POWER INTERNATIONAL
Released, Work May Proceed
Hugle, Kathy Jul-02-2012

VOGT POWER INTERNATIONAL
V17460-PSXE-502-00
14-May-2012

Erection & Maintenance Manual

Rigid struts

Index

Section	Description	Page
1.0	Introduction	3
2.0	Operation	3
3.0	Stroage	3
4.0	Installation	3
5.0	Maintenance	4
Appendix 1	Typical drawing	5

Erection & Maintenance Manual

Rigid struts

1.0 INTRODUCTION

Pipe Supports Limited's range of rigid struts, figure number 511 along with associated welding clevises, figure number 512 cover loadings up to more than 90 Tonnes with lengths being up to 6 metres. The numbering system and sizes of end fittings are compatible with the other dynamic restraint components. The Fig. 511 adjustable tubular strut provides length adjustment of +/- 100 mm.

2.0 OPERATION

The tubular rigid strut provides restraint for pipe work or equipment subject to static or dynamic loading; it is operative both in tension and in compression. The end connections are provided with close fitting pins and spherical bearings which permit +/- 5 degrees of angulation.

3.0) STORAGE

Supports should be handled with care and stored in a dry and dust free environment, preferably off the floor and under cover.

4.0 INSTALLATION

4.1 The connected welding clevises and pipe clamp if applicable should be positioned as required and the welding clevis welded to the existing steelwork.

4.2 Where sideways movements are large, it may be necessary to offset the installation positions to ensure the angulation does not exceed 5 degrees. This information is given on the support detail drawing.

4.3 If the pipe work is subject to cold pull, the support drawing should state whether the strut is to be installed before or after closure of the cold pull gap.

4.4 With the connections in place, fit one end of the strut to one of the connections, and then offer up the other end to the other connection. Adjust the length of the strut to fit the distance between the connections by first releasing the locking nuts (right hand and then left hand) and then

rotating the tubular body of the strut whilst preventing both end connections from rotating. Adjustment of +/- 100mm is provided. Site holes are provided at both ends of the tubular body to check that full thread engagement is maintained.

4.5 When the strut length has been adjusted so that the second clevis pin can be inserted, insert the pin followed by the split pins and tighten the locking nuts. The legs of the split pins must be bent back to ensure they stay in place.

5.0 MAINTENANCE

5.1 The Rigid Strut is designed to be essentially maintenance free. Periodically, at a frequency to suit site conditions, the rigid struts should be inspected for signs of mechanical damage, damage to paintwork or corrosion.

EM-RS-01
Rev 0
02/02/05

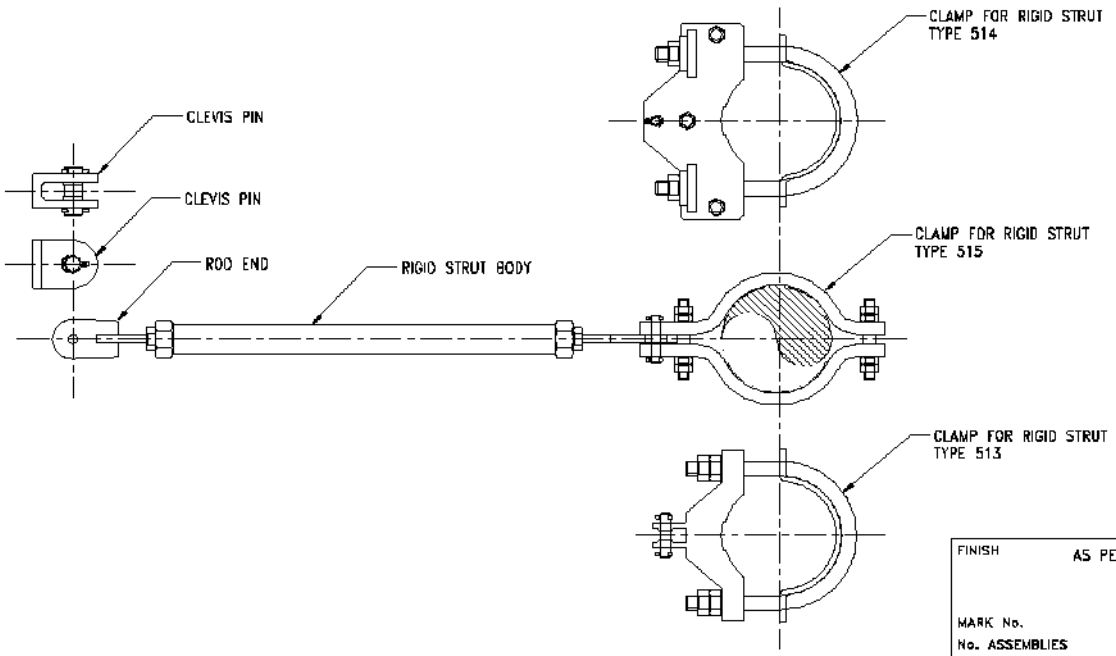

FINISH	AS PER CONTRACT SPEC.	DRAWN FSLCAD WISANU K.	DATE 15.07.04
MARK No. –		CHECKED	DATE
No. ASSEMBLIES –			
TITLE	RIGID STRUT & CLAMP	THREAD FORM –	
PROJECT	–	CLIENT ORDER No.	
CLIENT	–	CONTRACT No. –	
PIPE SUPPORTS LIMITED SALWARPE ROAD DROITWICH WORCESTERSHIRE WR9 9BH ENGLAND Tel. +44 (0)1905 795500		DRG. No. RIGID STRUT PARTS	
		SCALE NTS	REV. –

PIPE SUPPORTS LIMITED

Unit 22, West Stone,
Berry Hill Industrial Estate,
Droitwich
WR9 9AS
United Kingdom

Telephone +44 (0) 1905 795500
Fax: +44 (0) 1905 794126
E mail: psl@pipesupports.com
www.pipesupports.com

Erection & Maintenance Manual

Constant Effort Supports

Manual No; EM - CE - 01

Revision; 02

Dated; 16/08/11

Author; S J Barry

Signed ; M Collingwood

REV	DATE	DESCRIPTION	RAISED	APPRD
01	10/02/09	Address revised	AK	MC
02	16/08/11	Format revised	AC	MC

EM-CE-01
Rev 02
16/08/11

1
VOGT POWER INTERNATIONAL
Released, Work May Proceed
Hugle, Kathy | Jul-02-2012

VOGT POWER INTERNATIONAL
V17460-PSXE-503-00
14-May-2012

Erection & Maintenance Manual

Constant Effort Supports

Index

Section	Description	Page
1.0	Introduction	3
2.0	Storage	3
3.0	Erection	4
4.0	Maintenance	6
Appendix 1	Typical drawing	7

Erection & Maintenance Manual

Constant Effort Supports

1.0) INTRODUCTION

This manual gives guidance and recommendations for the erection, commissioning and subsequent maintenance of constant effort supports.

Constant effort supports deliver a nominally constant supporting effort to the point of attachment to the supported part; they replicate a very precise counter-balance mechanism. Because of this it is important that the suspended mass is reasonably close to the 'design load and not more than 20% of said load in variance with it.

Constant effort supports exhibit frictional and geometric variances from the nominal 'set' load; that stated as being the design load for the unit selected. This is usually defined as the 'deviation' and is a measure of the hysteresis of the load-displacement plot. The hysteresis of any particular support is usually within +/- 5% of the 'set's load but may be specified as +/-2.5% by special agreement.

The significance of hysteresis is that for a given range of load the support will remain static at it's set position; in order for the support to respond to changing conditions the tension generated in the hanger rod or the compression exerted on the supporting plinth must either increase or reduce by an amount slightly greater than the frictional resistance within the support. Therefore the 'balancing' of a support is a critical exercise if the support is to be set at its true mean load.

It is essential that the support is erected in the correct position; error at the erection stage can cause a re-distribution of the load and make it virtually impossible to 'balance' the supporting system.

When selecting the support at the design stage it is important that any additional load be added to the nominal design load of the supported part; large pipe clamps, spreader beams or even long hanger rods can impose significant increases in dead weight.

2.0) STORAGE;

2.1 Supports should be handled with care and stored in a dry and dust free environment, preferably off the floor and under cover.

3.0) ERECTION:

3.1 Constant effort supports are mechanisms that rely on freedom of motion; lack of adequate protection during storage, rough handling and abuse will significantly reduce the constancy of the support and may cause seizure of the mechanism.

3.2 The support should be carefully lifted into its nominated position and secured using appropriately sized fixing attachments.

3.3 Attachment to the supported pipework is made via the hanger rod and pipe clamp in the case of suspension type supports and via the plinth in the case of compression type supports. The pipework should be accurately adjusted to its correct elevation using either the turnbuckle or the height adjustment nut.

NB. It is important that the pipe is suspended naturally; sagging or hogging pipework will impose false loads at the support positions.

3.4 If the pipe work is to be lagged with thermal insulation after the supports have been erected, the piston plate locking nuts (2) which are located on both sides of the piston plate (1) on either side of the spring housing, should not be retracted from their original position i.e. remain in contact with the piston plate until lagging is complete.

3.5 If the pipe work is to be subjected to hydrostatic testing, this must take place with the piston plate locking nuts, which are located on the spring side of the piston plate on either side of the spring housing, still in their original position i.e. in contact with the piston plate.
Standard spring supports are designed to withstand an increased load during hydrostatic testing of up to twice the maximum rated load for the spring support.

3.6 Once satisfied that pipework is at its correct elevation the process of 'balancing' the system can commence. If the original assessment of weight distribution was correct; the pipe has been supplied to the nominal weight, valves and lagging/ insulation are at their theoretical weight and all the supports are in their correct position then it is simply a case of undoing the locking nuts and walking away!

3.7 The process of balancing the supporting system is very much an iterative one, adjustment to one support may manifest in a change at another two or three positions away. It is best to work between fixed support positions or terminal points and work towards the centre where the piping is most flexible.

3.8 To determine whether a support is in balance or not it is necessary to observe the piston plate locking nuts. For balance these nuts should all be relatively free to be unwound away from the piston plate leaving the support in a static, self-supporting state. If this is the case for any particular support we strongly recommend that the nuts should be wound only 5mm away from the plate at this stage. This is simply a precaution to avoid the pipe work moving far away from it's set position if subsequent supports are not truly balanced.

3.9 If the support is not in balance then either the forward (spring side) locking nut or the rear locking nut will offer significant resistance to turning. Should it be that the forward nut will not rotate then this signifies that the support is not providing sufficient effort and positive load adjustment is required. This entails increasing the distance between the main pivot pin and the pin, which transfers the spring force into the lever mechanism. This is achieved by rotating the load adjustment (3) nut clockwise when viewed from above in the case of all types except the VI (Vertical Inverted Type Support) group for which the opposite should be applied.

3.10 Subsequent supports should be balanced in the same way however it is necessary to continually check back to previous supports to ensure that the effect of changing supports towards the centre of the pipe run does not alter previously balanced supports. If this is the case then suitable adjustments should be made to overcome this and return these supports back to their correct position.

3.11 When all supports are floating, the locking nuts should be backed off fully to allow the system to operate correctly.

3.12 Where the constant effort support incorporates a limit stop (Reaction force receiver), the forward (spring side) locking nuts will be positioned at a distance from the spring compression plate, as shown on the support detail drawing.

3.13 Prior to operating the plant we recommend that all supports are checked to ensure -

- The locking nuts are fully retracted.
- No debris has been allowed to fall into the support, especially in the spring housing.
- The support is free from visual damage, all fixing bolts are secured and the rotational path of the lever mechanism is clear of obstructions.

We also suggest that a cold survey after installation and hot survey during normal operation of the plant is carried out and a record of all load adjustment settings and travel scale readings is taken.

4.0) MAINTENANCE:

4.1 Constant effort supports are designed to be maintenance free, they incorporate dry bearings and brass/ptfe thrust washers. However common sense should prevail; threaded items require greasing at intervals to suit the environment, but not longer than 2 years, periodic inspections are necessary to ensure the supports have not been damaged or obstructed by such items as temporary scaffolding, additional equipment or debris that may have fallen into the unit. Protective coatings should be periodically inspected and if necessary repaired.

4.2 Unfortunately due to the wide- ranging environments these devices are employed in, it is impossible to compile a fully comprehensive maintenance procedure. It should be remembered that constant effort supports are mechanisms and the health and longevity of the piping system depends on the reliable operation of the pipe supports.

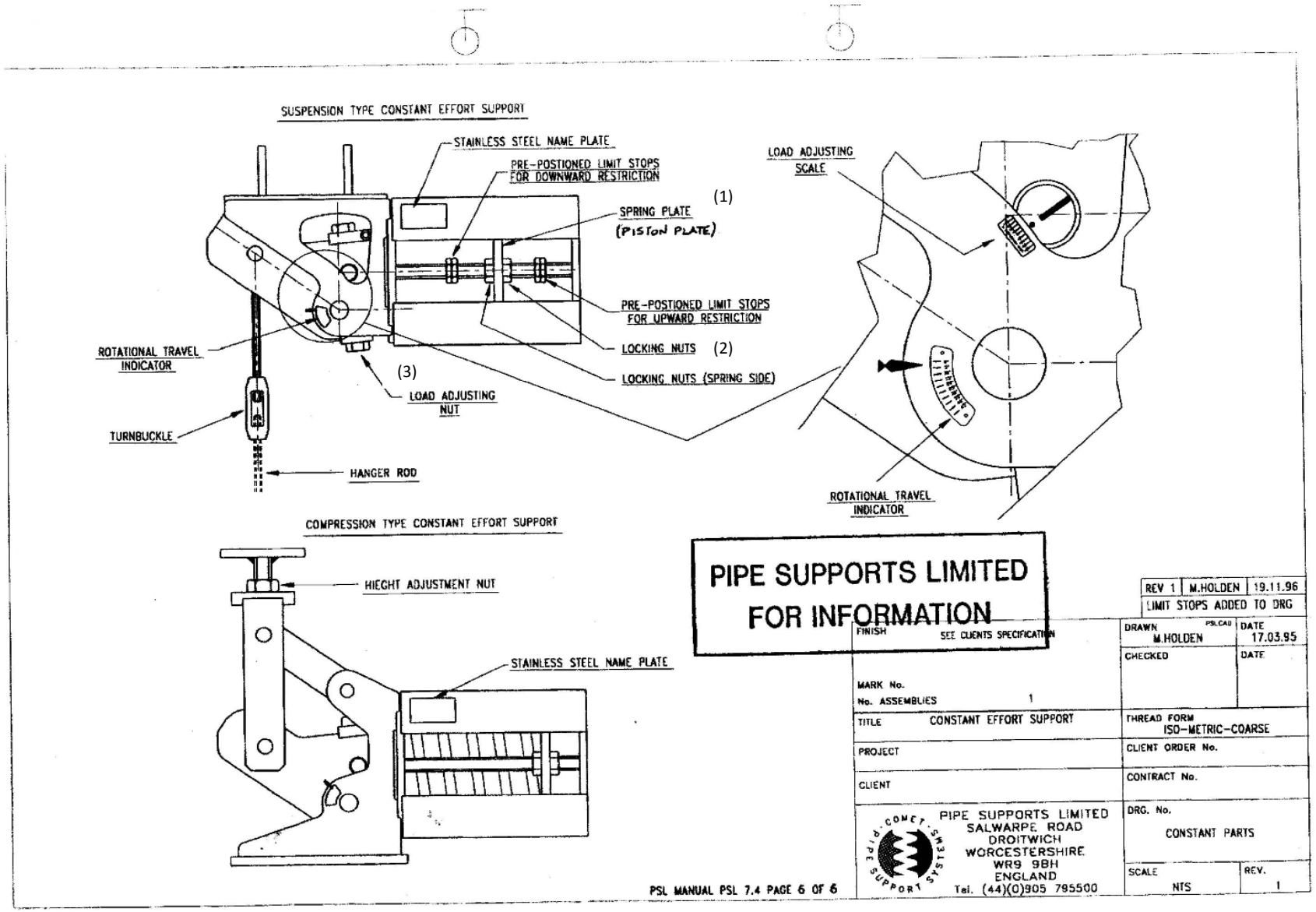
SUSPENSION TYPE CONSTANT EFFORT SUPPORT
STAINLESS STEEL NAME PLATE
PRE-POSTIONED LIMIT STOPS FOR DOWNWARD RESTRICTION
SPRING PLATE (PISTON PLATE)
(1)
PRE-POSTIONED LIMIT STOPS FOR UPWARD RESTRICTION
LOCKING NUTS (2)
LOCKING NUTS (SPRING SIDE)
ROTATIONAL TRAVEL INDICATOR
(3)
LOAD ADJUSTING NUT
TURNBUCKLE
HANGER ROD
LOAD ADJUSTING SCALE
ROTATIONAL TRAVEL INDICATOR
COMPRESSION TYPE CONSTANT EFFORT SUPPORT
HIEGHT ADJUSTMENT NUT
STAINLESS STEEL NAME PLATE
PIPE SUPPORTS LIMITED
FOR INFORMATION
REV 1 | M.HOLDEN | 19.11.96
LIMIT STOPS ADDED TO DRG
FINISH SEE CLIENTS SPECIFICATION
DRAWN M.HOLDEN
DATE 17.03.95
CHECKED
DATE
MARK No.
No. ASSEMBLIES 1
TITLE CONSTANT EFFORT SUPPORT
THREAD FORM ISO-METRIC-COARSE
PROJECT
CLIENT ORDER No.
CLIENT
CONTRACT No.
PIPE SUPPORTS LIMITED
SALWARPE ROAD
DROITWICH
WORCESTERSHIRE
WR9 9BH
ENGLAND
Tel. (44)(0)905 795500
DRG. No.
CONSTANT PARTS
SCALE NTS
REV. 1
PSL MANUAL PSL 7.4 PAGE 6 OF 6

Flow Meters and Flow Spools

Designed and Manufactured by

Fluidic Techniques and Vickery – Simms

Divisions of FTI Industries, Inc.

INSTALLATION AND OPERATION GUIDE
Document Number: FTI-IO-1

REVISION 0, Released: July 2011

VOGT POWER INTERNATIONAL	
Released, Work May Proceed	
Hugle, Kathy	Dec-27-2011

VOGT POWER INTERNATIONAL
V17460-ICXE-560-00
12-Dec-2011

Fluidic Techniques and Vickery-Simms

Divisions of FTI Industries, Inc.

Table of Contents

Legal Information 3

Section 1: Introduction 4

Section 2: Design & Materials 5

Section 3: Handling 7

Section 4: Shipping Preparation & Storage 8

Section 5: Installation 9

Section 6: Operation & Maintenance 11

Appendix A: Nameplates for Differential Pressure Type Flow Meters 12

Appendix B: CE Tags 13

Appendix C: Flow Measurement References 14

Legal Information

Warnings

This document contains notices such as Warnings and Cautions that have to be observed to ensure personal safety and to prevent damage to the equipment and other property.

Qualified Personnel

Only personnel qualified for the specific task should handle, install or operate the products described in this manual.

Proper use of products

These products should only be used for the applications as described in the Technical Design Documentation for the particular item. The product should be properly transported, stored, assembled, installed, operated and maintained to ensure that the products operate safely and without problems. The information in the Technical Design Documentation must be observed.

Liability Disclaimer

To ensure consistency with the product provided, the contents of this document have been reviewed; however, full consistency cannot be guaranteed. Any necessary corrections determined by regular review and returned comments will be included in subsequent editions.

Notes

- All details and variation in equipment or every possible contingency to be encountered during installation, operation or maintenance cannot be covered in this document. If additional information is needed, or a particular problem arises, please contact FTI. Contact information is provided below.

  Phone: 817-473-4481; Fax: 817-473-6318

  Email: ftidc@fti-industries.com

  Website: www.fluidictechniques.com …or scan the code →

- The contents of this document shall not become part of or modify any prior or existing agreement, commitment or relationship. The entire obligation of FTI is contained in the sales contract. The warranty stated in the contract between parties is the sole warranty of FTI. Except where noted in this document that an operation or procedure will result in the voiding the original warranty, any statements contained in this document do not create any new warranties or modify the existing warranty.

Section 1 INTRODUCTION

Fluidic Techniques and Vickery-Simms are divisions of FTI Industries (FTI) Incorporated and their products bear the markings of "FT" or "V-S", respectively.

These products include differential pressure type Flow Meters and Flow Spools.

Differential Pressure Type Flow Meters include various types of orifice meters, venturi meters, flow nozzles, PTC 6 Flow Nozzle Test Sections, High Head Recovery (HHR) Flow Tubes and HHR FlowPaks.

- Except for the HHR Flow Tubes and HHR FlowPaks, these meters are designed and manufactured in accordance with the specified flow measurement code or reference.
- HHR Flow Tubes and HHR FlowPaks are of a proprietary design; thus, they are designed and manufactured exclusively by FTI.

In order to perform as expected, Flow Meters must be installed properly. Proper installation includes following the guidelines of the referenced flow measurement standard including the requirements of straight pipe upstream of the flow meter and orientation of the differential pressure taps. For most differential pressure flow meters, the meter must be installed so that the direction of flow is correct. The direction of flow is indicated on the drawing and on the meter. (See Appendix A)

Flow Spools are assemblies which are designed and manufactured in accordance with the specification provided to FTI. These assemblies may be used in conjunction with other types of flow meters or may be provided as a piping section so that flow straightening devices, expanding or reducing sections may be provided.

Flow Meters and Flow Spools will be referred to in this document as "Products". Products may consist of pipe, flanges, pipe fittings, convergent and divergent sections and meter bodies. Each part description and material are listed on the drawing which should accompany these instructions.

Caution

The information provided in this document is intended to provide general information about the handling, installation and use of the products. Design and flow measurement codes, standards and references are cited in this document. These publications should be consulted to ensure that the product is properly designed and installed. This document is not intended to replace any code or site safety document. Good engineering practices should always be utilized.

Products are designed and manufactured to be installed into conduits which transport fluids. Fluids may be liquid, gas or steam. The conduits may be parts of larger assemblies or subassemblies which are components of power generating stations, chemical plants, refineries, pipeline transport systems or other type of installation where the flow of fluid must be measured.

Design Codes

Listed below are some of the codes or standards typically used for product design. Other codes or standards may be used. The code or standard utilized for a particular item is listed on the drawing for that item.

- ASME B31.1 Power piping
- ASME B31.3 Process Piping
- ASME B31.4 Pipeline Transportation Systems for Liquid Hydrocarbons and Other Liquids
- ASME B31.8 Gas Transmission and Distribution Piping Systems

Products may also be provided in accordance with the Pressure Equipment Directive, PED 97/23/EC.

Danger:

1. *The product design conditions are listed on the drawing. These conditions which include the Maximum Pressure, Maximum Temperature and Minimum Temperature should be observed or product failure may occur which may damage property, or cause injury or death to personnel.*
2. *No protection is provided against over-pressurization of the products.*

Warnings:

Materials are specified by the user; therefore, it is the responsibility of the user to determine or specify the compatibility of the materials with the process fluid.

Design Conditions

The Design Conditions are shown on the drawing as Design Pressure, Design Temperature and MDMT, which is the minimum design metal temperature. These design conditions have either been provided to FTI in a specification or determined by FTI according to operating conditions which were provided. If the design conditions are determined by FTI according to the operating conditions, then a note on the drawing will advise that these conditions have been assumed.

The design conditions are utilized to determine or verify flange ratings, wall thicknesses and hydrostatic test pressures. These conditions may also be utilized to verify the service Category in accordance with Pressure Equipment Directive, PED 97/23/EC. If the product is supplied with CE marking, a nameplate bearing the design conditions will be permanently attached. An example of the nameplate is shown in Appendix B.

The materials listed on the drawing have either been provided to FTI as part of a specification or determined by FTI according to the materials specified and the design conditions. For example, a specification for a venturi meter states that the material of construction is carbon steel with a 316 stainless steel throat section. Depending on the design conditions and Nominal Pipe Size (NPS) of the installation, the inlet cylinder of the venturi may be A/SA 106 Gr.B CS, A/SA 106 Gr.C CS or SA 516 Gr.70 CS.

Danger

It is imperative to verify that the design conditions and materials listed on the drawing are correct. If the product is installed in an application where the design conditions may be outside of the range of the conditions shown, catastrophic failure may occur resulting in personnel injury or death and damage to the product and surrounding equipment.

Warning

Design calculations are based on internal pressure only and do not consider any external loads and mechanical or thermal cycling. The user is responsible for determining externally applied loads due to earthquakes, pipe movements and other environmental conditions, as well as fatigue.

Warning

User is responsible for verifying that the materials used are chemically compatible for fluid service.

Warnings

1) *Never insert an object into any internal part of the product for lifting or handling. Inserting a chain, strap, or fork to lift product can damage internal surfaces which are critical to the proper operation of the product and voids the warranty.*

2) *Proper lifting techniques should always be used during handling and installation of the product. Failure to properly lift or support the meter can result in personnel injury and damage to the product which voids the warranty.*

3) *Inserting foreign objects into the branch connections may damage the product and void the warranty. For differential pressure type flow meters, the edge of the pressure tap hole where the hole goes through the pipe, flange or body is critical to the proper performance of the meter.*

4) *In accordance with certain code requirements, stress relief is required for some products. The stress relief may be required to relieve the stresses induced by welding (Post Weld Heat Treatment, PWHT). Exercise care to perform proper preheat and PWHT when welding fixtures for lifting or handling.*

Flanges

The outer or user ends of the products may have flanges for bolting into the system.

Caution: **Improper handling may damage the flange faces which could prevent the flanges from sealing when placed into service.**

Weld Ends

The outer ends or user ends may be provided with weld preparations so that the product may be welded into the system.

Caution: **Improper handling may damage the welding preparations which could cause problems in the fit up and welding when installing the product into the system**.

Branch connections

These may be supplied as fittings such as weld-o-lets, sock-o-lets or thread-o-lets. These branch connections may be supplied with short pieces of pipe (nipples) installed.

Caution - **The product should be handled so that the branch connections and nipples or valves, if installed, are not damaged.**

Caution –**Do not lift or handle the product by the branch connections or nipples or valves.**

1) *The drawing contains information about the steps taken at FTI to preserve the product. Unless otherwise required by the specification, exterior surfaces except for stainless steel parts will be coated with primer. The interior will be coated with a corrosion inhibitor.*
2) *Protective covers will be provided for flange faces.*
3) *The ends of products which are prepared for welding into the system will be coated with a weldable coating such as Deoxaluminite. After coating, these ends will be covered by plastic caps.*
4) *Plastic plugs will be installed in open branch connections.*
5) *These preparations are not intended for sustained exterior climates. Care should be taken to minimize exposure to exterior climates. The interior of the products should be protected against the moisture and foreign objects.*
6) *All meters must be stored indoors, and out of the weather, between shipping receipt and installation.*

The product must be installed properly to perform as expected.

For differential pressure flow meters, the flow measurement standard is indicated on the drawing. Requirements for the length of straight pipe upstream of the meter, limitations of changes in diameter and orientation of the differential pressure taps are included in these standards. These requirements must be fulfilled to meet the published uncertainties of the meters.

HHR Flow Tubes and HHR FlowPaks are proprietary items; therefore, are not listed in flow measurement standards.

1. The published installation requirements for venturi meters should be followed for HHR Flow Tubes.
2. No additional straight pipe lengths are required upstream of the HHR FlowPak.

The **Direction of Flow** may be critical to proper operation of the product. Before installing, verify the direction of flow on the product and the drawing. (See Appendix A)

A list of flow measurement standards is shown in Appendix B.

Warning

To avoid damage to internal surfaces and obstruction of the differential pressure connections, the product should be installed in systems which are free of debris and foreign objects after all flushing or steam blows.

Warning

User is responsible for ensuring that all branch connections, including but not limited to those used for pressure, temperature and differential pressure connections, and inspection ports, are properly sealed. These connections may be threaded, socket weld or butt weld.

For Products with flanged connections

Warnings:

1. The flange classification has been verified in accordance with the design conditions and materials specified to FTI as shown on the drawing. It is the user's responsibility to verify that this information is correct before placing the flanges into service.
2. It is the responsibility of the user to ensure that the bolting and gaskets are the correct size and material for the service.
3. It is the responsibility of the user to ensure that the correct torque has been used before placing the flanges into service and after any thermal cycling.

For Products with Welded connections

Warnings:

1. Welding should be performed only by qualified welders using qualified welding procedures
2. The user is responsible for any stress relieving required due to welding performed outside of the FTI Facility, in other words, field welding.
3. The user is responsible for all nondestructive examination which is required due to field welding.

Any instrumentation should be properly installed in accordance with the manufacturer's instruction and any applicable code including flow measurement codes.

Caution – Before placing the product into service, verify the following:

1) *Ports have been properly sealed*
2) *For flanged products, the bolts have been properly tightened to the correct torque*
3) *For products welded into the system, the welds have been completed and tested*

Requirements for flow meter operation are described in explicit detail in the flow measurement codes, standards and references. These publications should be consulted to ensure proper operation of the product. The minimum requirements are that the products be installed in circular conduits of the same diameter. The conduits should be flowing full. For liquid service, the line should be vented to remove any gases entrapped gases. Similarly, liquids should be drained from lines for gas service before placing the line in operation.

Requirements for the operation of flow spools depend on the intended purpose of the spool. If the purpose is another type of flow meter such as an ultrasonic flow meter, then the instructions for the particular meter should be consulted.

Since the products are mechanical devices with no moving parts, no standard maintenance is required. Performance of flow meters should be observed and recorded to determine trends which may indicate that the product is not functioning properly. This may be the result of wear due to erosion, corrosion or damage due to foreign objects. If the installation permits, the internal surfaces of the products may be periodically inspected for wear such as erosion or corrosion or any damage to the surfaces. If feasible, orifice plates may be periodically removed and inspected. The inspection frequency will depend on the service.

As with other piping products in the system, the product should be routinely inspected by nondestructive examination.

Warnings:

1) ***Surface temperature of the product may be hot or cold which can cause personal injury.***
2) ***Contents of the product may be pressurized during operation or testing. The product should be depressurized before any activity or operation which may result in pressure release. Inadvertent pressure release may cause injury to personnel and property.***
3) ***During operation, the product should be filled with fluid(s). Caution should be used if the fluid(s) is(are) unstable and decomposition is possible.***

For Differential Pressure Type Flow Meters

Example of Nameplate

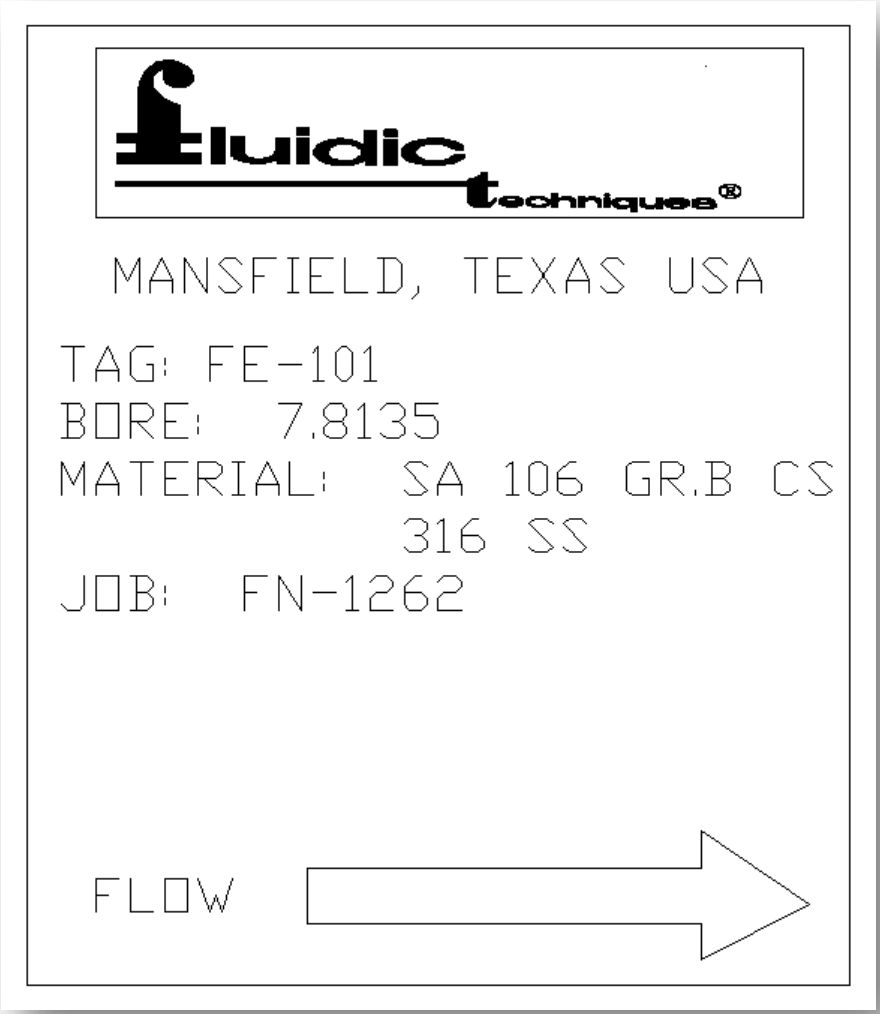

Examples of CE Tags

For Category 1

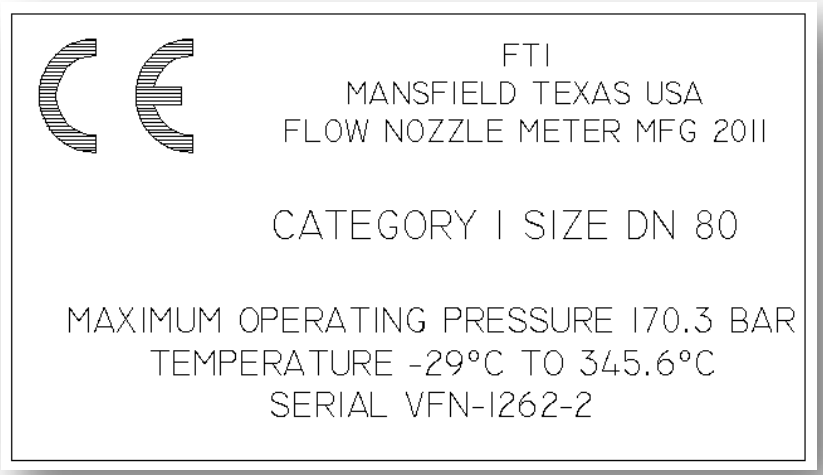

For Categories 2 – 3, the Notifified Body ID number is added

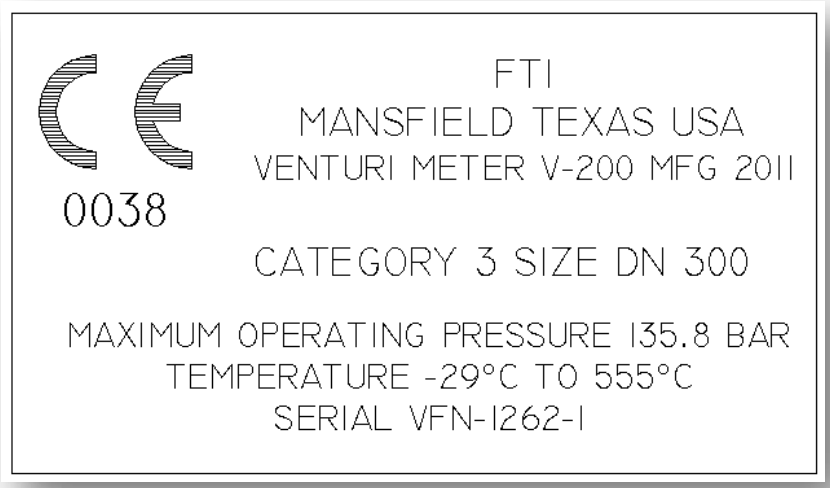

Appendix C Flow Measurement References

AGA Report No. 3, Orifice Metering of Natural Gas • Part 1: General Equations & Uncertainty Guidelines • Part 2: Specification and Installation Requirements • Part 3: Natural Gas Applications
AGA Report No. 9, Measurement of Gas by Multipath Ultrasonic Meters
ASME Fluid Meters, Their Theory and Application
ASME MFC-3M: Measurement of Fluid Flow in Pipes Using Orifice, Nozzle and Venturi
ASME MFC-14M: Measurement of Fluid Flow Using Small Bore Precision Orifice Meters
ASME PTC 4.4: Gas Turbine Heat Recovery Steam Generators
ASME PTC 6: Steam Turbines
ASME PTC 19.5: Flow Measurement
ISO 5167: Measurement of fluid flow by means of pressure differential devices inserted in circular cross-section conduits running full • Part 1: General principles and requirements • Part 2: Orifice plates • Part 3: Nozzles and Venturi nozzles • Part 4: Venturi tubes

TWR Lighting, Inc.

Enlightened Technology[S.M]

4300 WINDFERN RD SUITE 100 - HOUSTON TX 77041-8943
VOICE (713) 973-6905 - FAX (713) 973-9352
web: www.twrlighting.com

IMPORTANT!!!

PLEASE TAKE THE TIME TO FILL OUT THIS FORM COMPLETELY. FILE IT IN A SAFE PLACE. IN THE EVENT YOU EXPERIENCE PROBLEMS WITH OR HAVE QUESTIONS CONCERNING YOUR CONTROLLER, THE FOLLOWING INFORMATION IS NECESSARY TO OBTAIN PROPER SERVICE AND PARTS.

MODEL # AA0M3XFRSSIND

SERIAL # _____

PURCHASE DATE _____

PURCHASED FROM _____

M.2011.A.AA0M3XFRSSIND
NEW 08/04/11

VOGT POWER INTERNATIONAL	
Released, Work May Proceed	
Hugle, Kathy	Oct-20-2011

VOGT POWER INTERNATIONAL
V17460-ICXE-525-00
12-Oct-2011

TWR Lighting, Inc.

Enlightened Technology℠

AA0M3XFRSSIND CONTROLLER

TABLE OF CONTENTS

1.0 GENERAL INFORMATION 1

2.0 INSTALLATION 2
- 2.1 MOUNTING THE CONTROLLER CABINET 2
- 2.2 EXTERNAL PHOTOCELL WIRING 3
- 2.3 POWER WIRING 3
- 2.4 SIDELIGHT WIRING 3
- 2.5 SIDELIGHT ALARM WIRING 4

3.0 THEORY OF OPERATION 6
- 3.1 POWER SUPPLY 6
- 3.2 SIDELIGHTS 6

4.0 MAINTENANCE GUIDE 7
- 4.1 RED OBSTRUCTION LIGHTING 7
- 4.2 L-810 LAMP REPLACEMENT 7
- 4.3 CONTROLLER 7
- 4.4 PHOTOCELL 7

5.0 MAJOR COMPONENTS PARTS LIST

6.0 SUGGESTED SPARE PARTS LIST

WARRANTY & RETURN POLICY

RETURN MERCHANDISE AUTHORIZATION (RMA) FORMS

TWR Lighting, Inc.

Enlightened Technology℠

AA0M3XFRSSIND CONTROLLER

APPENDIX

CHASSIS LAYOUT.....1273-R

CHASSIS SCHEMATIC……1273-S

L-810 OL-2 SIDELIGHT ASSEMBLY DETAIL.....310 (REV A)

AA0 TOWER LIGHTING KIT..... T1463

JUNCTION BOX .....100089 (REV A)

WARRANTY & RETURN POLICY

RETURN MERCHANDISE AUTHORIZATION (RMA) FORMS

TWR Lighting, Inc.

Enlightened Technology℠

AA0M3XFRSSIND CONTROLLER

1.0 GENERAL INFORMATION

The TWR Lighting, Inc. Model AA0M3XFRSSIND Controller is for applications of three (3) L-810 double obstruction light fixtures with the option of transferring between the primary and secondary lamp.

The obstruction lights burn steady. Each fixture requires two (2) 116 watt 230V AC bulbs (116A21TS230V).

A by-pass switch (SW1) allows the controller to be turned on during daylight hours without covering the photocell.

The photocell is a 3 blade, twist to lock type.

Power supplied to the controller shall be 230V AC 50 Hz single phase.

Controller functions that are monitored by remote alarms in the form of dry contact closures (Form C) are as follows:

POWER FAILURE Monitors 230V AC to the controller. Alarms in the event of power failure, or tripped circuit breaker.

OBSTRUCTION LIGHTS Will give an alarm when a main lamp within any of the OL2 fixtures fails, and that particular indicator will turn on.

2.0 INSTALLATION INSTRUCTIONS

2.1 MOUNTING THE CONTROLLER CABINET

(Refer to drawing 1273-R)

2.1.1 The power supply control cabinet can be located at the base of the structure, or in an equipment building. Mounting footprints are showing on drawing 1273-R. Power wiring to the control cabinet should be in accordance with local methods and National Electrical Codes (NEC).

2.1.2 If the control cabinet is mounted inside an equipment building, the photocell's S/S enclosure should be mounted vertically outside the building above the eaves facing north. Wiring from the photocell socket to the control cabinet should consist of one (1) each; red, black, and white wires. The white wire is connected to the socket terminal marked "COM," the black wire is connected to the socket terminal marked "B," and the red wire is connected to the socket terminal marked "R." As above, the photocell should be positioned so that it does not "see" ambient light, which would prevent it from switching to the nightmode.

2.1.3 If the control cabinet is mounted outside an equipment building, the photocell's S/S enclosure should be mounted vertically so the photocell is above the control cabinet. Care must be taken to assure that the photocell does not "see" any ambient light that would prevent it from switching into the nightmode. The photocell wiring is the same as in 1.1.1.

2.1.4 The wiring from the photocell, the service breaker, and the sidelights should enter the control cabinet through the water-tight connectors in the bottom of the cabinet. Inside the cabinet, the connections will be made on the terminal strip and circuit breakers located at the bottom of the chassis. These connections are made as follows:

2.2 EXTERNAL PHOTOCELL WIRING

(Refer to drawing 1273-R)

2.2.1 Connect the BLACK wire from the photocell to terminal block (TB2) marked “L.”

2.2.2 Connect the RED wire from the photocell to terminal block (TB2) marked “SSR.”

2.2.3 Connect the WHITE wire from the photocell to terminal block (TB2) marked “N.”

2.3 POWER WIRING

(Refer to drawing 1273-R)

2.3.1 Power wiring to the control cabinet should be in accordance with local methods and National Electrical Codes (NEC).

2.3.2 Circuit breaker needs to be rated at 15 amps.

2.3.3 Connect incoming 230V AC “HOT” to terminal block (TB1) marked “L.”

2.3.4 Connect neutral to one (1) of the terminal blocks (TB1) marked “N.”

2.3.5 Connect the AC ground to the ground lug located to the left of TB2.

2.4 SIDELIGHT WIRING

(Refer to drawing 1273-R)

2.4.1 Connect the wire from the main lamp of the first OL2 fixture to the circuit breaker marked “S1P.”

2.4.2 Connect the wire from the secondary lamp of the first OL2 fixture to the circuit breaker marked “S1S.”

2.4.3 Connect the wire from the main lamp of the second OL2 fixture to the circuit breaker marked “S2P.”

2.4.4 Connect the wire from the secondary lamp of the second OL2 fixture to the circuit breaker marked “S2S.”

2.4.5 Connect the wire from the main lamp of the third OL2 fixture to the circuit breaker marked “S3P.”

2.4.6 Connect the wire from the secondary lamp of the third OL2 fixture to the circuit breaker marked “S3S.”

2.4.7 Connect the neutral wire(s) to the terminal block (TB1) marked “N.”

2.4.8 Connect the ground wires to the ground lug located to the right of the circuit breakers.

2.5 <u>SIDELIGHT ALARM WIRING</u>
(Refer to drawings 1273-R and 1273-S)

2.5.1 Independent contact closures are provided for: Power Failure, OL2 Main Lamp Burnouts.

2.5.2 Alarm wiring. To utilize the dry contacts, the customer will need four (4) pairs of wires to interface with the alarm device. Connect customer alarm commons to terminal block TB4, terminal #1. The remaining wires from each pair will terminate as follows:

2.5.2.1 POWER FAILURE Connect alarm wire to terminal block TB4, terminal #2, for normally open, or terminal #3, for normally closed monitoring.

2.5.2.2 S1P ALARM Connect alarm wire to terminal block TB4, terminal #4, for normally open, or terminal #5, for normally closed monitoring.

2.5.2.3 S2P ALARM Connect alarm wire to terminal block TB4, terminal #6, for normally open, or terminal #7, for normally closed monitoring.

2.5.2.4 S3P ALARM Connect alarm wire to terminal block TB4, terminal #8, for normally open, or terminal #9, for normally closed monitoring.

3.0 THEORY OF OPERATION

3.1 POWER SUPPLY

230V AC enters the controller from the circuit breaker panel, and PL1 indicator will be on. Line sits at the PRD waiting to be energized, and also keeps the power failure relay K1 energized. When the 6390-FAA photocell is activated, line energizes the coil of the PRD. This can also be accomplished by using the photocell by-pass switch (SW1).

3.2 SIDELIGHTS

Line (LD) is sent to modules M1 – M3, and through the toridal sensing coils. M1 – M3 are the current sensors for all of the main lamps. If the main lamp within an OL2 fixture burns out, then that particular module will send 230V to the secondary lamp, along with a failure indicator, as well as the onboard relay coil, which will cause a contact closure for that fixture, and a secondary indicator will turn on for that particular failure.

Once the cause of the failure has been corrected, the unit will need to be reset by shutting off the service breaker to the unit.

4.0 MAINTAINANCE GUIDE

4.1 RED OBSTRUCTION LIGHTING

The only required maintenance needed to be performed is replacement of the lamps in the L-810 fixture. Lamps should be replaced after being operated for not more than 75 percent of the rated life, or immediately upon failure, as per Advisory Circular 70/7460-1K. By following these instructions, maximum safety and performance can be achieved.

TOOLS REQUIRED: NONE

4.2 L-810 LAMP REPLACEMENT

4.2.1 Unclasp the two (2) latches and allow the bail to recline backward.

4.2.2 Lift the lens up and over the lamp, allowing the lens to hang from the safety cable.

4.2.3 Unscrew the lamp counter clockwise and remove.

4.2.4 Install the new lamp by screwing the lamp clockwise.

4.2.5 Re-install the lens, making sure it is seated properly on the base.

4.2.6 Re-clasp the two (2) latches

4.3 CONTROLLER

No scheduled maintenance is required. Perform on an as needed basis only.

4.4 PHOTOCELL

The photocell is a sealed unit. No maintenance is needed nor required, other than replacement as needed.

5.0 MAJOR COMPONENTS PARTS LIST

QTY	PART NUMBER	DESCRIPTION
1	6390-FAA	120 – 240V AC PHOTOCELL
1	A1614CHNFSS	STAINLESS STEEL ENCLOSURE
7	8WA1204	TERMINAL BLOCK (TB1 & TB2)
6	S261-D1	1 amp CIRCUIT BREAKER (S1P – S3S)
2	8WA1808	END STOP
1	STJ01002	PHOTOCELL BYPASS SWITCH (SW1)
1	V275LA20A	METAL OXIDE VARISTOR (MOV 1, MOV 2)
1	9KE-240V	SPDT 240V AC RELAY (K1)
3	CM-250	SIDELIGHT ALARM MODULES (M1 – M3)
3	9KE1LAMP-240	240V 1 LAMP RELAY (K2 – K4)
1	PRD7AYO-240V	POWER RELAY 240V (PRD)
1	19411235M	GREEN LED INDICATOR FOR POWER ON (PL1)
3	19411230M	RED LED INDICATOR FOR SIDELIGHT PRIMARY FAILURE (PL2 – PL4)
3	19411230M	RED LED INCIATOR FOR SIDELIGHT SECONDARY “ON” (PL5 – PL7)
1	LWC201512SS	STAINLESS STEEL PHOTOCELL ENCLOSURE
1	43109	PHOTOCELL RECEPTACLE
1	A4491	PHOTOCELL DIECAST RECEPTACLE MOUNT
2	TERMBLK141-10	10 PART TERMINAL BLOCK (TB3, TB4)
4	PB27E122	OCTAL RELAY SOCKETS

6.0 SUGGESTED SPARE PARTS LIST

QTY	PART NUMBER	DESTRIPTION
1	6390-FAA	120 – 240V AC PHOTOCELL
1	CM-250	SIDELIGHT ALARM MODULES (M1 – M3)
1	9KE-240V	SPDT 240V AC RELAY (K1)
1	9KE1LAMP-240	240V 1 LAMP RELAY (K2 – K4)

TWR Lighting, Inc.

Enlightened Technology S.M

AA0M3XFRSSIND CONTROLLER

Warranty & Return Policy

TWR Lighting, Inc. ("TWR") warrants its products (other than "LED Product") against defects in design, material (excluding incandescent bulbs) and workmanship for a period ending on the earlier of two (2) years from the date of shipment or one (1) year from the date of installation.

TWR Lighting, Inc. ("TWR") warrants its "LED Product" against defects in design, material and workmanship for a period of five (5) years from the date of shipment. TWR, at its sole option, will, itself, or through others, repair, replace or refund the purchase price paid for "LED Product" that TWR verifies as being inoperable due to original design, material or workmanship. All warranty replacement "LED Product" is warranted only for the remainder of the original warranty of the "LED Product" replaced. Replacement "LED Product" will be equivalent in function, but not necessarily identical, to the replaced "LED Product."

TWR Lighting, Inc. ("TWR") warrants its "LED Product" against light degradation for a period of five (5) years from the date of installation. TWR, at its sole option, will, itself, or through others, repair, replace or refund the purchase price paid for "LED Product" that TWR verifies as failing to meet 70% of the minimum intensity requirements as defined in the FAA Advisory Circular 150/5345-43E dated 10/19/95. All warranty replacement "LED Product" is warranted only for the remainder of the original warranty of the "LED Product" replaced. Replacement "LED Product" will be equivalent in function, but not necessarily identical, to the replaced "LED Product."

Replacement parts (other than "LED Product") are warranted for 90 days from the date of shipment.

Conditions not covered by this Warranty, or which might **void** this Warranty are as follows:

- Improper Installation or Operation
- Misuse
- Abuse
- Unauthorized or Improper Repair or Alteration
- Accident or Negligence in Use, Storage, Transportation, or Handling
- Any Acts of God or Nature
- **Non-OEM Parts**
  The use of non-OEM parts or modifications to original equipment design will void the manufacturer warranty and could invalidate the assurance of complying with FAA requirements as published in Advisory Circular 150/5345-43.

Field Service – Repairs are warranted for 90 days from the date of service, except where TWR has made recommendations that were not adhered to that may cause premature failure on previous repairs. Labor, Travel, and Tower Climb are not covered under warranty. Customer shall be obligated to pay for all incurred charges not related to warranty. All warranty repairs are performed by trained TWR personnel, or dispatched through an extensive network of certified and insured Service Representatives.

TWR Lighting, Inc.

Enlightened Technology S.M

AA0M3XFRSSIND CONTROLLER

Return Policy

Return Terms – You must first contact our Customer Service Department at **713-973-6905** to acquire a Return Merchandise Authorization (RMA) number in order to return the product(s). Please have the following information available when requesting an RMA number:

- The contact name and phone number of the tower owner
- The contact name and phone number of the contractor
- The site name and number
- The part number(s)
- The serial number(s) (if any)
- A description of the problem
- The billing information
- The Ship To address

This RMA number must be clearly visible on the outside of the box. **If the RMA number is not clearly labeled on the outside of the box, your shipment will be refused. Please ensure the material you are returning is packaged carefully.** The warranty is null and void if the product(s) are damaged in the return shipment.

All RMAs must be received by TWR LIGHTING, INC., 4300 WINDFERN RD #100, HOUSTON TX 77041-8943, within 30 days of issuance.

Upon full compliance with the Return Terms, TWR will replace, repair and return, or credit product(s) returned by the customer. It is TWR's sole discretion to determine the disposition of the returned item(s).

Replacements – Replacement part(s) will be shipped and billed to the customer for product(s) considered as Warranty, pending return of defective product(s). When available, a certified reconditioned part is shipped as warranty replacement with a Return Merchandise Authorization (RMA) number attached. Upon receipt of returned product(s), inspection, testing, and evaluation will be performed to determine the cause of defect. The customer is then notified of the determination of the testing**.**

- Product(s) that is deemed defective and/or un-repairable and covered under warranty - a credit will be issued to the customer's account.
- Product(s) found to have no defect will be subject to a **$60.00 per hour testing charge (1 hour minimum), which will be invoiced to the customer.** At this time, the customer may decide to have the tested part(s) returned, and is responsible for the return charges.
- Product(s) under warranty, which the customer does not wish returned, the customer will be issued a credit against the replacement invoice.

TWR Lighting, Inc.

Enlightened Technology S.M

AA0M3XFRSSIND CONTROLLER

Warranty & Return Policy

(continued)

Repair & Return – A Return Merchandise Authorization (RMA) will be issued for all part(s) returned to TWR for repair. Upon receipt of returned product(s), inspection, testing and evaluation will be performed to determine the cause of defect. The customer is then notified of the determination of the testing. If the returned part(s) is deemed un-repairable, or the returned part(s) is found to have no defect, the customer will be subject to a **$60.00 per hour testing charge (1 hour minimum), which will be invoiced to the customer.** Should the returned parts be determined to be repairable, a written estimated cost of repair will be sent to the customer for their written approval prior to any work being performed. In order to have the tested part(s) repaired and/or returned, the customer must issue a purchase order and is responsible for the return shipping charges.

Return to Stock – Any order that is returned to TWR for part(s) ordered incorrectly by the customer, or unneeded upon receipt, the customer is required to pay a **20% restocking fee**. A credit will be issued once it is determined that the Return Terms are met.

Credits – Credits are issued once it is determined that all of the Warranty and Return Terms are met. All credits are processed on Fridays. In the event a Friday falls on a Holiday, the credit will be issued on the following Friday.

Freight – All warranty replacement part(s) will be shipped via ground delivery and paid for by TWR. Delivery other than ground is the responsibility of the customer.

REMEDIES UNDER THIS WARRANTY ARE LIMITED TO PROVISIONS OF REPLACEMENT PARTS AND REPAIRS AS SPECIFICALLY PROVIDED. IN NO EVENT SHALL **TWR** BE LIABLE FOR ANY OTHER LOSSES, DAMAGES, COSTS OR EXPENSES INCURRED BY THE CUSTOMER, INCLUDING, BUT NOT LIMITED TO, LOSS FROM FAILURE OF THE PRODUCT(S) TO OPERATE FOR ANY TIME, AND ALL OTHER DIRECT, INDIRECT, SPECIAL, INCIDENTAL, OR CONSEQUENTIAL DAMAGES, INCLUDING ALL PERSONAL INJURY OR PROPERTY DAMAGE DUE TO ALLEGED NEGLIGENCE, OR ANY OTHER LEGAL THEORY WHATSOEVER. THIS WARRANTY IS MADE BY **TWR** EXPRESSLY IN LIEU OF ALL OTHER WARRANTIES, WHETHER EXPRESSED OR IMPLIED. WITHOUT LIMITING THE GENERALITY OF THE FORGOING, **TWR** MAKES NO WARRANTY OF MERCHANTABILITY OR FITNESS OF THE PRODUCT(S) FOR ANY PARTICULAR PURPOSE. **TWR** EXPRESSLY DISCLAIMS ALL OTHER WARRANTIES.

TWR Lighting, Inc.

Enlightened Technology℠

AA0M3XFRSSIND CONTROLLER

RETURN MERCHANDISE AUTHORIZATION (RMA) FORM

RMA#:_____DATE:_____

CUSTOMER:_____

_____

CONTACT:_____PHONE NO.:_____

ITEM DESCRIPTION (PART NO.):_____

_____

MODEL NO.:_____SERIAL NO.:_____

ORIGINAL TWR INVOICE NO.:_____DATED:_____

DESCRIPTION OF PROBLEM:_____

_____

_____

_____

SIGNED_____DATE NEEDED_____

RETURN ADDRESS:_____

_____

PLEASE RETURN PRODUCT TO: 4300 WINDFERN RD #100 HOUSTON TX 77041-8943

TWR Lighting, Inc.

Enlightened Technology℠

AA0M3XFRSSIND CONTROLLER

RETURN MERCHANDISE AUTHORIZATION (RMA) FORM

RMA#:_____DATE:_____

CUSTOMER:_____

_____

CONTACT:_____PHONE NO.:_____

ITEM DESCRIPTION (PART NO.):_____

_____

MODEL NO.:_____SERIAL NO.:_____

ORIGINAL TWR INVOICE NO.:_____DATED:_____

DESCRIPTION OF PROBLEM:_____

_____

_____

_____

SIGNED_____DATE NEEDED_____

RETURN ADDRESS:_____

_____

PLEASE RETURN PRODUCT TO: 4300 WINDFERN RD #100 HOUSTON TX 77041-8943

TWR Lighting, Inc.

Enlightened Technology℠

AA0M3XFRSSIND CONTROLLER

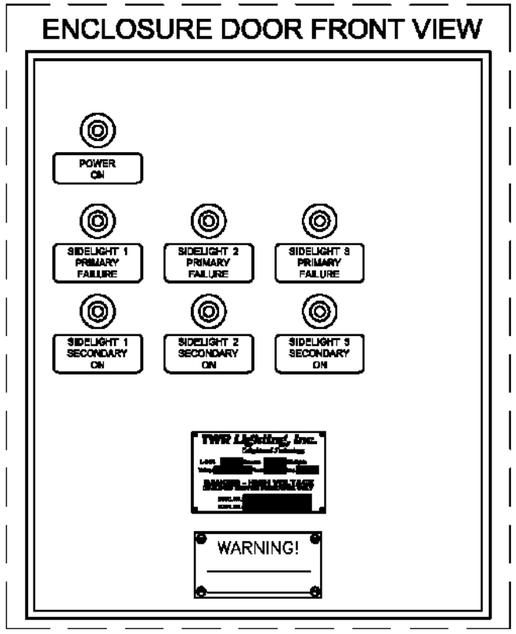

SCHEMATIC TAG	DESCRIPTION
PL1	POWER ON INDICATOR
PL2	SIDELIGHT 1 PRIMARY FAILURE (GREEN)
PL3	SIDELIGHT 2 PRIMARY FAILURE (RED)
PL4	SIDELIGHT 3 PRIMARY FAILURE (RED)
PL5	SIDELIGHT 1 SECONDARY ON (RED)
PL6	SIDELIGHT 2 SECONDARY ON (RED)
PL7	SIDELIGHT 3 SECONDARY ON (RED)

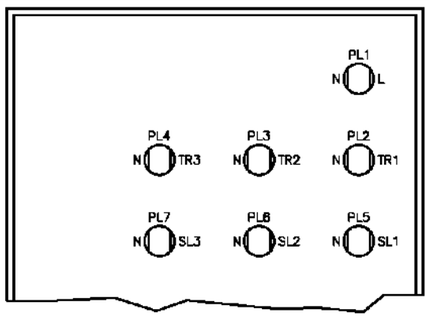

ENCLOSURE DOOR BACK VIEW

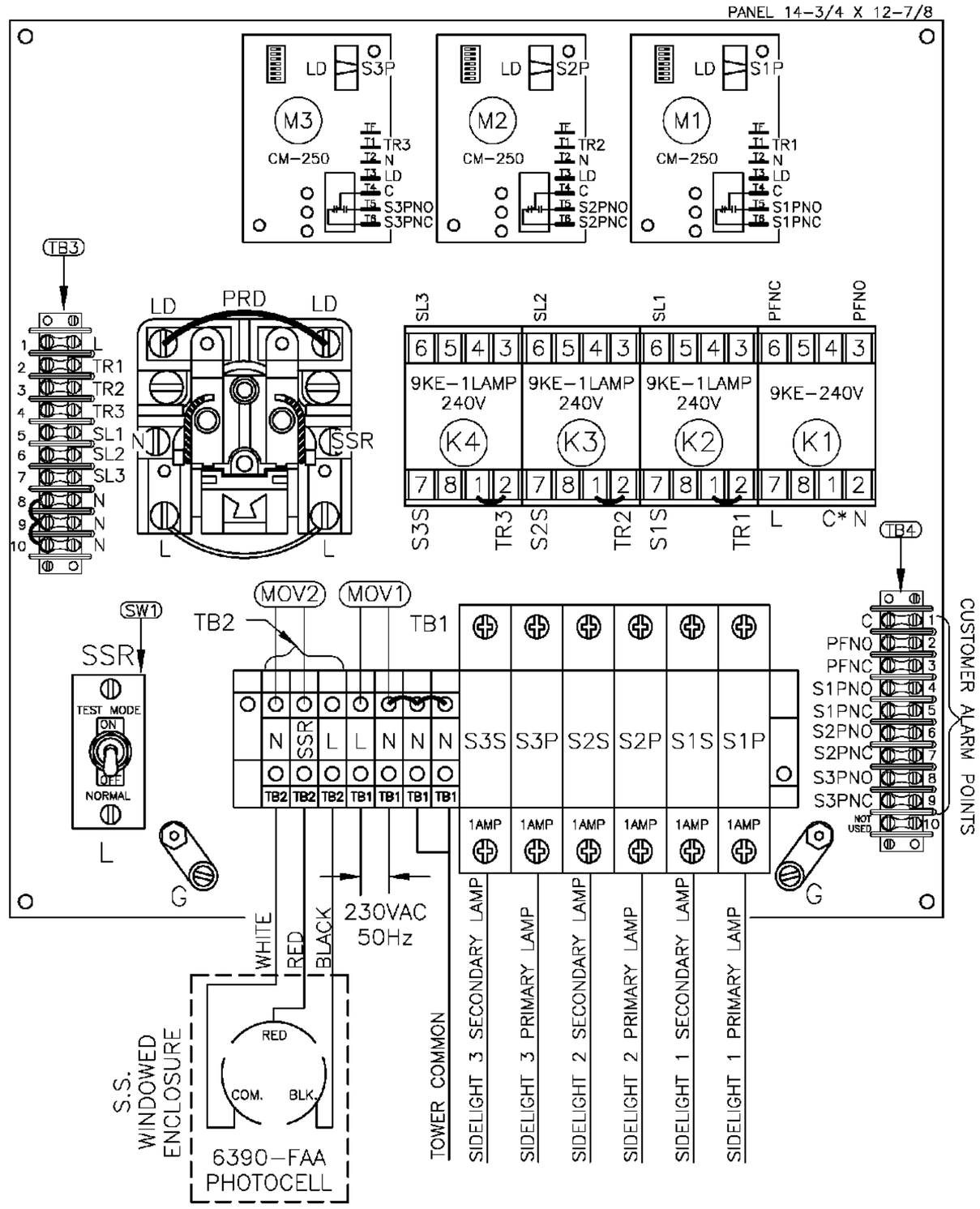

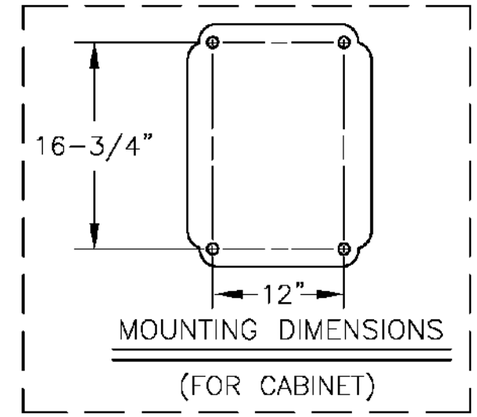

NOTES:

1. WIRES ARE CONNECTED LETTER TO LETTER. (EXAMPLE) L TO L TO L.

*CUSTOMER ALARM POINTS

C = ALARM COMMON
NC = NORMALLY CLOSE
NO = NORMALLY OPEN
PFNO/PFNC = POWER FAILURE
S1PNO = SIDELIGHT 1 PRIMARY FAILURE NO
S1PNC = SIDELIGHT 1 PRIMARY FAILURE NC
S2PNO = SIDELIGHT 1 PRIMARY FAILURE NO
S2PNC = SIDELIGHT 1 PRIMARY FAILURE NC
S3PNO = SIDELIGHT 1 PRIMARY FAILURE NO
S3PNC = SIDELIGHT 1 PRIMARY FAILURE NC
* ALARM OUTPUTS ARE FORM C

VOGT JOB #V17460

AA0M3XFRSSIND CHASSIS LAYOUT

PROD DEPT	TWR Lighting, Inc. Enlightened Technology		
SERV DEPT			
ENGINEER			
DRAWN BY E.A.SALAZAR		SHEET SIZE B	SHEET QTY. 1 OF 1
DATE 08/04/2011	SCALE N.T.S.	DWG. NO. 1273-R V17460	

The use of non-OEM parts or modifications to original equipment design will void the manufacturer warranty and could invalidate the assurance of complying with FAA requirements as published in Advisory Circular 150/5345-43.
NOTICE: The drawings and photographic images contained herein are the sole property of TWR Lighting, Inc. All information contained herein that is not generally known shall be considered confidential except to the extent the information has been previously established. The drawings and photographic images contained herein may not be reproduced, copied or used as the basis for manufacture or sale or production or any other purpose without the expressed written permission of TWR Lighting, Inc.

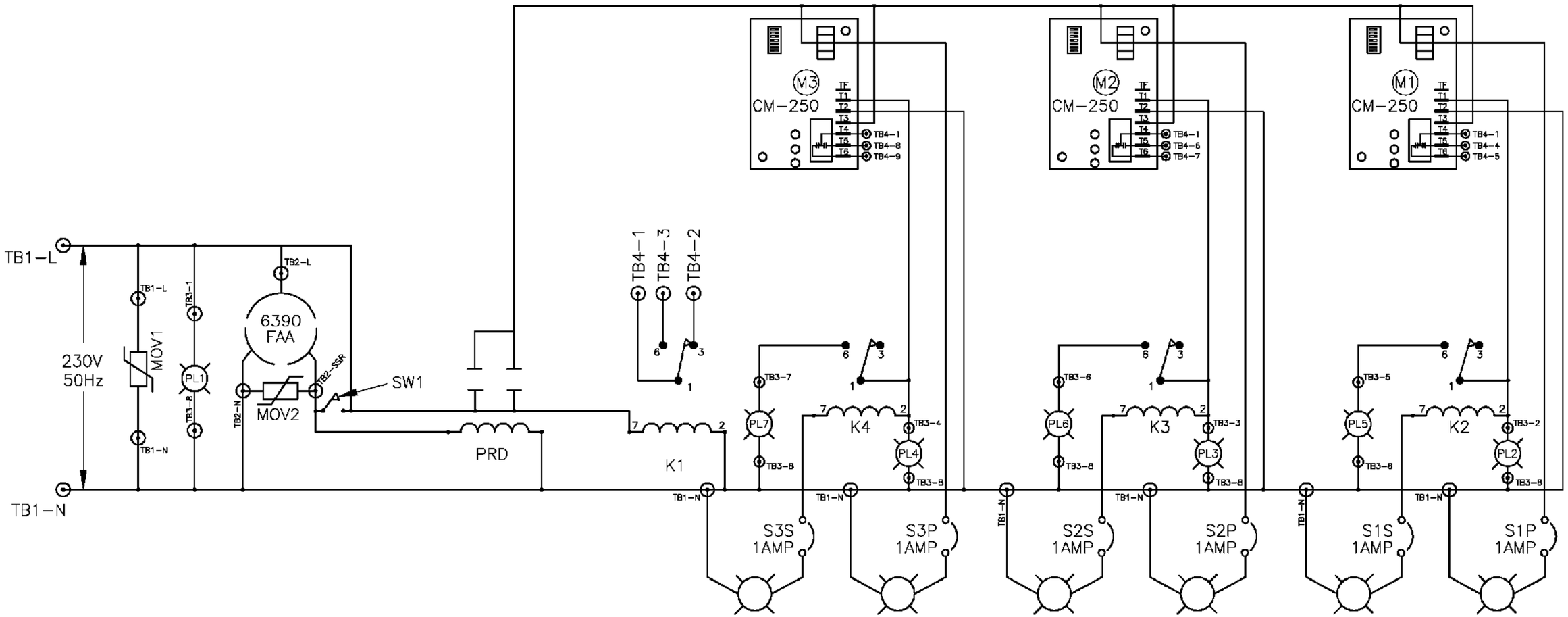

230V 116 WATT SIDELIGHT LAMPS

VOGT JOB #17460

AAOM3XFRSSIND SCHEMATIC LAYOUT

PROD DEPT	**TWR Lighting, Inc.** *Enlightened Technology*
SERV DEPT	
ENGINEER	
DRAWN BY E.A.SALAZAR	SHEET SIZE B / SHEET QTY. 1 OF 1
DATE 08/05/2011 / SCALE N.T.S.	DWG. NO. 1273-S V17460

The use of non-OEM parts or modifications to original equipment design will void the manufacturer warranty and could invalidate the assurance of complying with FAA requirements as published in Advisory Circular 150/5345-43.

NOTICE: The drawings and photographic images contained herein are the sole property of TWR Lighting, Inc. All information contained herein that is not generally known shall be considered confidential except to the extent that information has been previously established. The drawings and photographic images contained herein may not be reproduced, copied or used as the basis for manufacture or sale or prescription or any other purpose without the expressed written permission of TWR Lighting, Inc.

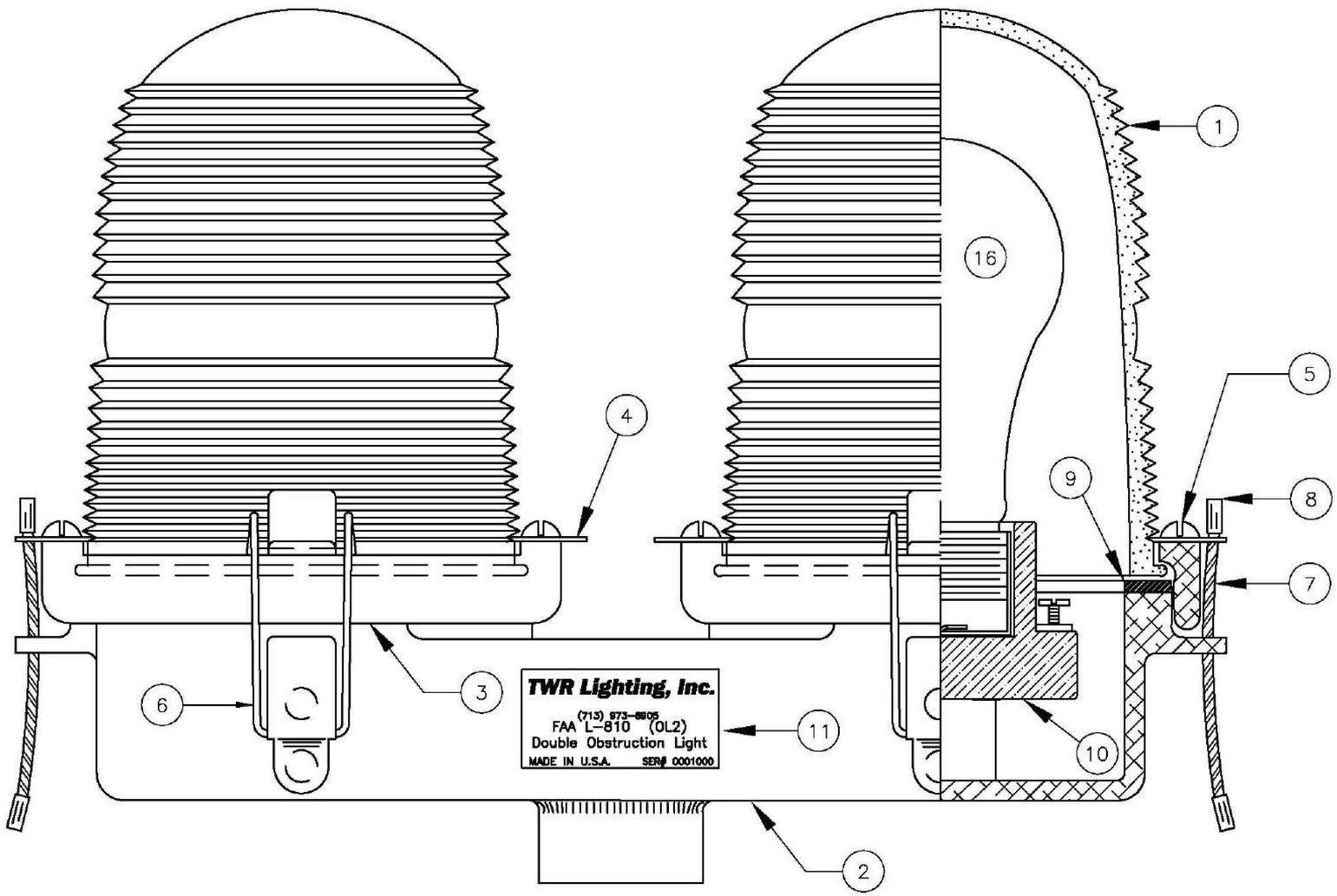

	ITEM NO	QTY.	TWR PART NUMBER	DESCRIPTION
	1	2	AP35222	RED SIDELIGHT GLASS
	2	1	OL2C	DOUBLE SIDELIGHT BODY
	3	2	106C	LENS HOLDER RING
	4	4	12V245	OL LENS CLIP
	5	4	832X14PH	8–32 X 1/4" PH S.S. SLOT
	6	4	HC255SS	SIDELIGHT LATCHES
	7	2	7X7SS	1/16 7 X 7 S.S. WIRE
	8	4	A1A	STAKON CRIMP
	9	2	OLG	OL GASKET
	10	2	19062	SIDELIGHT RECEPTACLE
	11	1	100324	OL2 SERIAL NUMBER LABEL
*	12	8	18PRSS	1/8 POP RIVETS
*	13	1	A314	3/4" CONDUIT LOCKNUT
*	14	4	104C	WHITE TEFLON WASHER
*	15	4	832X34PH	8–32 X 3/4" S.S. PH SLOT
~	16	2	116A21TS	116W–120V LAMP (TYP.)

*=PART NOT SHOWN
~=PART SOLD SEPARATELY

NOTE:
1. FAA APPROVED LIGHT USES THE 116A21TS LAMP. OTHER LAMPS ARE AVAILABLE TO MEET YOUR APPLICATION.

OL2

3/4" OL–2 SIDELIGHT
ASSEMBLY DETAIL (PART #OL2)

PROD DEPT
SERV DEPT
ENGINEER

TWR Lighting, Inc.
Enlightened Technology

DRAWN BY E.A.SALAZAR
SHEET SIZE B
SHEET QTY. 1 OF 1
DATE 10/30/96
SCALE N.T.S.
DWG. NO. 310

DATE:	LTR.	REVISION
11/08/96	A	REVISED ITEM #15,#16

The use of non-OEM parts or modifications to original equipment design will void the manufacturer warranty and could invalidate the assurance of complying with FAA requirements as published in Advisory Circular 150/5345-43.
NOTICE: The drawings and photographic images contained herein are the sole property of TWR Lighting, Inc. All information contained herein that is not generally known shall be considered confidential except to the extent the information has been previously established. The drawings and photographic images contained herein may not be reproduced, copied or used as the basis for manufacture or sale or promotion or any other purpose without the expressed written permission of TWR Lighting, Inc.

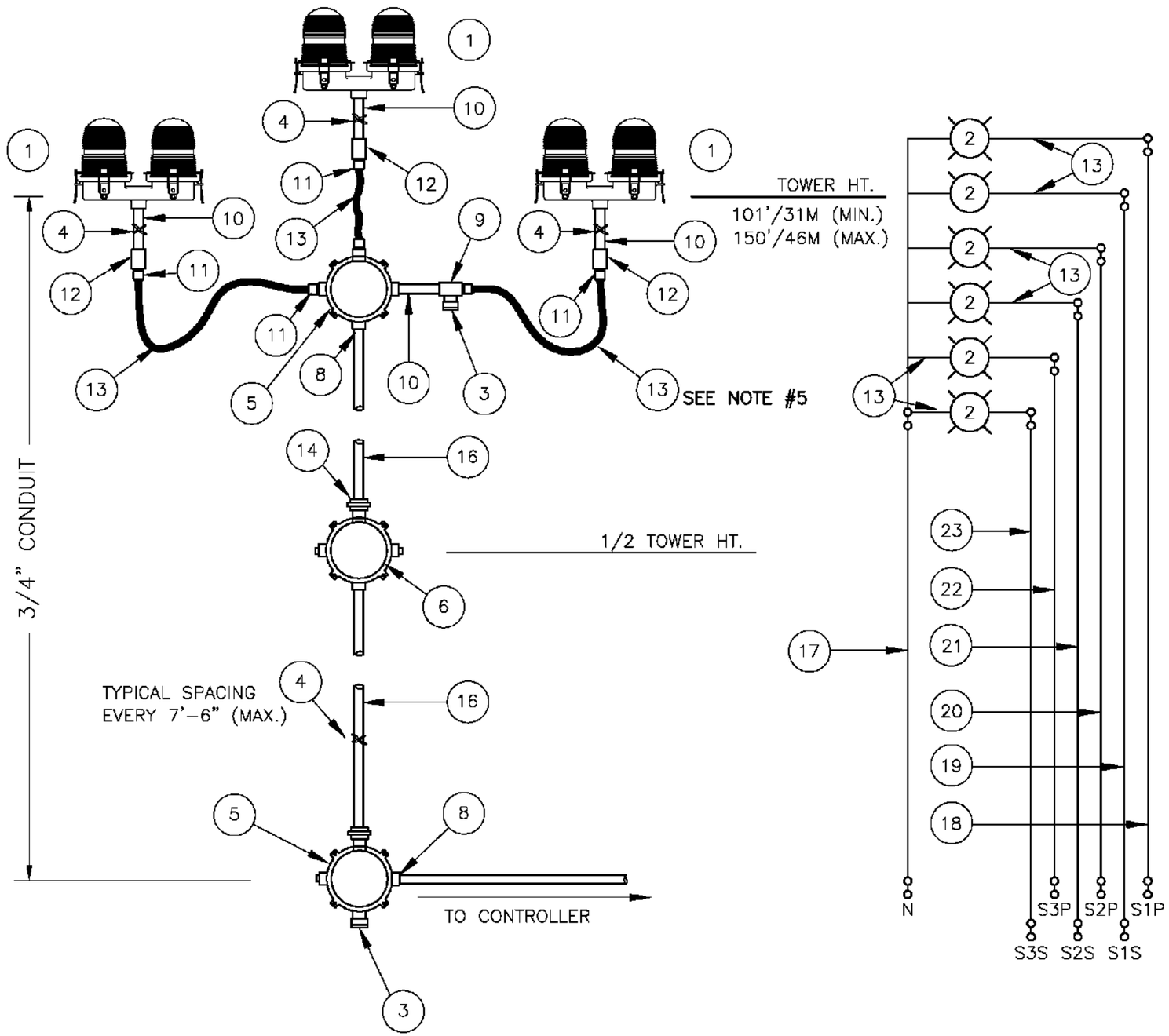

TOWER WIRING AND ASSEMBLY

BILL OF MATERIALS

ITEM NO.	QTY.	TWR PART NO.	DESCRIPTION
1	3	OL2	DOUBLE OBSTRUCTION LIGHT
2	6	116A21TS230V	116 WATT 230 VOLT LAMP
3	2	5012902	BREATHER
4	1	SS10012	WRAPLOCK
5	2	JB5/7	3/4" JUNCTION BOX
6	1	JB0	3/4" STRAIN RELIEF BOX
7	1	PIPDOP	4 oz. PIPE DOPE
8	7	A314	3/4" CONDUIT LOCKNUTS
9	1	T27CG	3/4" CONDULET W/ COVER AND GASKET
10	3	N34T12	3/4" X 12" CONDUIT NIPPLE
11	6	CGB295SA	3/4" CORD CONNECTOR 0.50 – 0.625
12	3	CPLG34	3/4" CONDUIT COUPLING
13	90'	STCABLEOB	OBSTRUCTION LIGHT CABLE
14	2	UNY205	3/4" UNION
15	1	AA0M3XFRSSIND	AA0M3XFRSSIND ALARMED CONTROLLER
16	160'	CONDUIT34	3/4" CONDUIT (TWR HT. + 30'/9M)
17	160'	12THHNWHT	#12 THHN WHITE WIRE
18	160'	12THHNBLK	#12 THHN BLACK WIRE
19	160'	12THHNBLK	#12 THHN BLACK WIRE
20	160'	12THHNBLK	#12 THHN BLACK WIRE
21	160'	12THHNBLK	#12 THHN BLACK WIRE
22	160'	12THHNBLK	#12 THHN BLACK WIRE
23	160'	12THHNBLK	#12 THHN BLACK WIRE

* = ITEM NOT SHOWN

NOTES:

1) CONDUIT SIZE BASED ON USING TYPE THHN WIRE.
2) USE RIGID GALVANIZED STEEL CONDUIT.
3) BREATHERS ALLOW FOR CIRCULATION OF AIR TO PREVENT CONDENSATION.
4) LIGHTS SHOULD BE SPACED 120° APART.
5) GROUND GREEN WIRE TO THE JUNCTION BOX.

VOGT PROJECT #17460

AA0 LIGHTING KIT ALARMED

TWR Lighting, Inc.

APP'D	ENGINEER	CHK'D BY
DRAWN BY E.A.SALAZAR	SHEET SIZE B	SHEET QTY. 1 OF 1
DATE 01/17/2010	SCALE N.T.S.	DRAWING NO. T1463V17460

NOTICE: This drawing is the property of TWR Lighting, Inc. All information contained herein that is not generally known shall be confidential except to the extent the information has been previously established. This drawing may not be reproduced, copied or used as the basis for manufacture or sale without written permission.

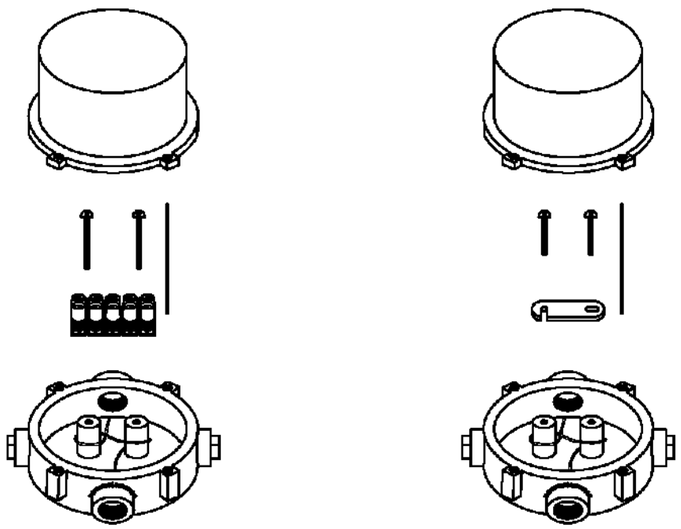

JB-5 AND JB-0
3/4" JUNCTION BOX

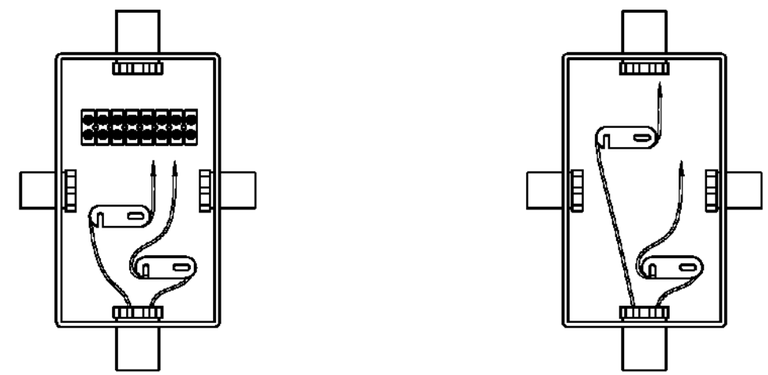

JB-8 AND JB-8SR
1" JUNCTION BOX

USING THIS JUNCTION BOX METHOD SPACING IS 100 FEET MAXIMUM.

AWG WIRE SIZE	MAX. NUMBER WIRES IN 3/4" CONDUIT	MAX. NUMBER WIRES IN 1" CONDUIT	WIRE AREA SQ. INCHES	WEIGHT PER 100 FEET
12 THHN	16	26	0.0117	2.50
10 THHN	10	17	0.0184	4.10
8 THHN	6	9	0.0373	6.70
6 THHN	4	7	0.0519	10.30
4 THHN	2	4	0.0845	16.20

NOTES:

1) DRAWING ILLUSTRATES METHOD OF STRAIN RELIEVING WIRE. USE THIS METHOD ON ALL JUNCTION BOXES.
2) THE NATIONAL ELECTRICAL CODE–ARTICLE 300–19–B3 REQUIRES CONDUCTORS IN A VERTICAL CONDUIT BE SUPPORTED TO RELIEVE STRAIN ON TERMINAL BLOCK CONNECTIONS.
3) SKETCH ILLUSTRATES METHOD OF STRAIN RELIEVING A SINGLE CONDUCTOR. SEVERAL CONDUCTORS MAY BE GROUPED TOGETHER.
4) CONDUCTORS MAY BE MIXED BUT SHOULD NOT TAKE UP MORE THAN 40% OF CONDUIT'S INSIDE AREA.

DATE:	LTR.	REVISION
9/29/00	A	UPDATED NOTES

JUNCTION AND STRAIN RELIEF BOXES

PROD DEPT
SERV DEPT
ENGINEER

TWR Lighting, Inc.
Enlightened Technology

DRAWN BY	SHEET SIZE	SHEET QTY.
G.D. SEBEK	B	1 OF 1
DATE 07/26/93	SCALE N.T.S.	DWG. NO. 100089

The use of non-OEM parts or modifications to original equipment design will void the manufacturer warranty and could invalidate the assurance of complying with FAA requirements as published in Advisory Circular 150/5345-43.
NOTICE: The drawings and photographic images contained herein are the sole property of TWR Lighting, Inc. All information contained herein that is not generally known shall be considered confidential except to the extent the information has been previously established. The drawings and photographic images contained herein may not be reproduced, copied or used as the basis for manufacture or sale or production or any other purpose without the expressed written permission of TWR Lighting, Inc.

TWR Lighting, Inc.

Enlightened Technology[S.M.]

EQUIPMENT HANDLING & STORAGE RECOMMENDATIONS

12/05/2011

Vogt Power Project Number: V17460- AMATA CITY 2

Vogt Power PO Number: V4378

TWR Lighting, Inc. Sales Order Numbers: 126169 and 126720

TWR Lighting, Inc. recommends that the equipment for this project is not double stacked and is stored in a dry area.

VOGT POWER INTERNATIONAL	
Released, Work May Proceed	
Hugle, Kathy	Dec-27-2011

VOGT POWER INTERNATIONAL
V17460-ICXE-526-00
06-Dec-2011

Handling, Storage, Packaging, Preservation and Delivery Minimum Supplier Requirements

Quality Manufacturing Manual

1.0 *Scope*

1.1 This instruction covers the ATCOSL requirements for the Handling, Storage, Packaging, Preservation and Delivery of all equipment.

2.0 *Purpose*

2.1 The purpose of this instruction is to provide the supplier with the minimum ATCO Structures & Logistics requirements.

2.2 Any special requirements will be described in the contract documents.

3.0 *Responsibility*

3.1 It is the responsibility of the supplier to implement these instructions for all equipment.

4.0 *Instruction*

4.1 Handling

4.1.1 Suppliers will be responsible for providing temporary lifting lugs or devices to suit their own handling requirements. These temporary devices must not deform or damage the equipment and must be removed prior to shipment.

4.1.2 Lifting lugs shown on the ATCO Structures & Logistics drawings are provided for installation use only. Use of these lugs by the supplier is entirely at their own risk.

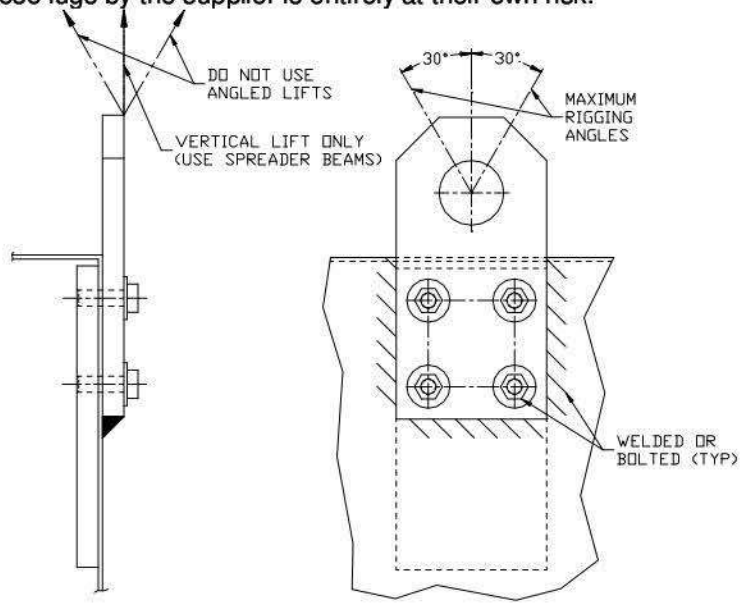

- Note: Unless otherwise directed by ATCO Structures & Logistics' Engineering Department, any pre-engineered lifting lugs included on the fabrication drawings can be utilized as shown above by the manufacturer.

4.1.3 Suppliers requiring special handling techniques may contact ATCOSL for engineering direction on an as required basis.

4.1.4 Shipping braces and beams must be installed during all handling when specified by the ATCO Structures & Logistics drawings. All temporary items should be painted yellow.

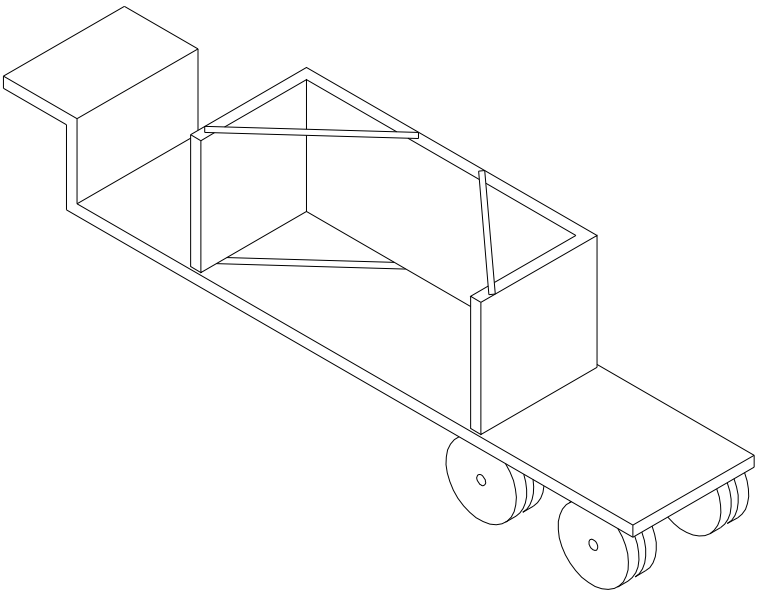

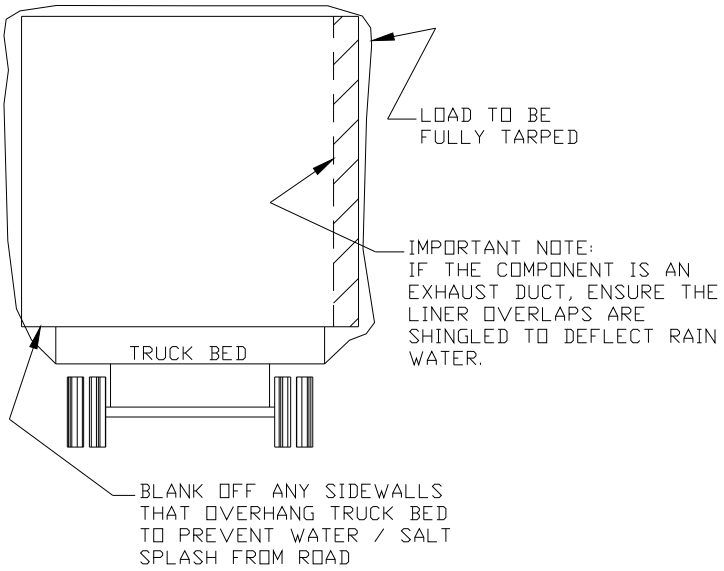

- Important Note: Temporary shipping beams/braces must be positively secured to prevent loosening during transportation. (Use lock nuts, plastic caps or upset threads)
- Under no circumstances shall the insulation be allowed to become wet during storage or transportation.

4.2 Storage

4.2.1 Storage may be required for periods of up to 3 months on the supplier's property.

4.2.2 Preferred storage is climate controlled, under roof (if available).

4.2.3 Insulation in lined ducts must be kept dry at all times. Store ducting with liners protected against rain or fully tarp while in storage.

4.2.4 Outdoor storage shall provide for "high and dry" storage of the products and consist of a secure, fully fenced compound with gated access.

4.2.5 Damage to products due to vandalism or animals (rodents, etc) will be the responsibility of the sub-supplier.

4.2.6 Refer to the contract documents for special requirements (if applicable).

4.3 Packaging

(See also 4.5 **Delivery** for associated instructions)In general, all loose ship items shall be crated.

4.3.1 G.T. Intake Systems

To maintain compliance with the critical cleanliness requirements for G.T. Intake Systems, special attention is needed to provide adequate protection and sealing of the components, during transportation.

4.3.1.1 Complete Assemblies/Small Ducts

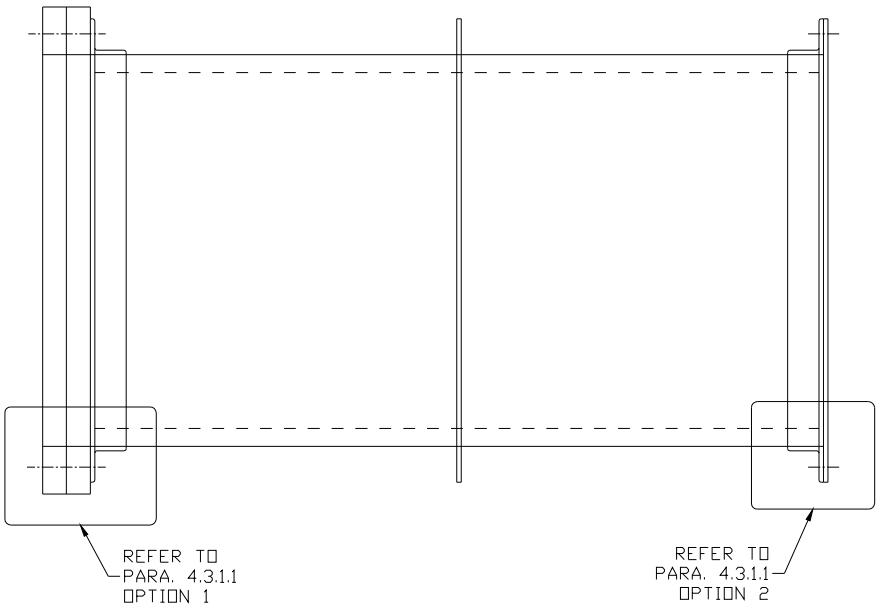

Option 1

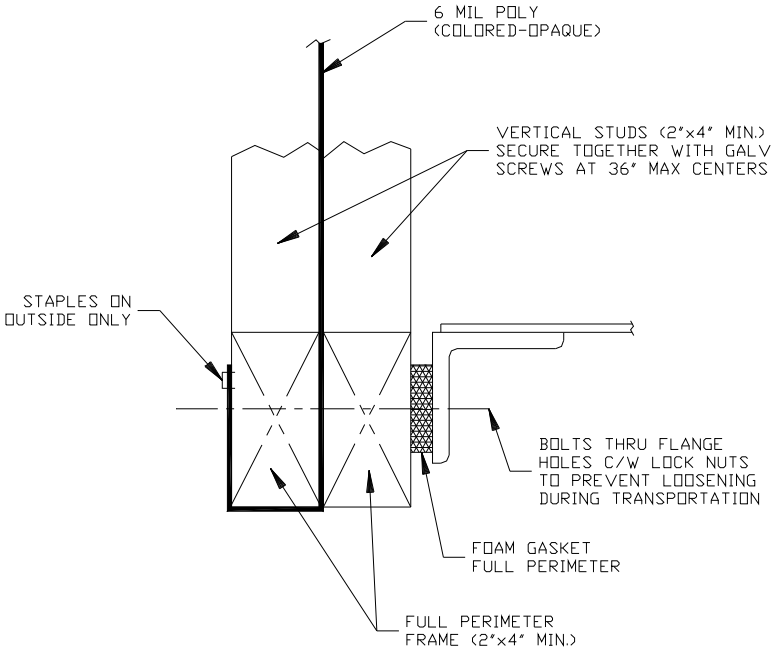

Option 2

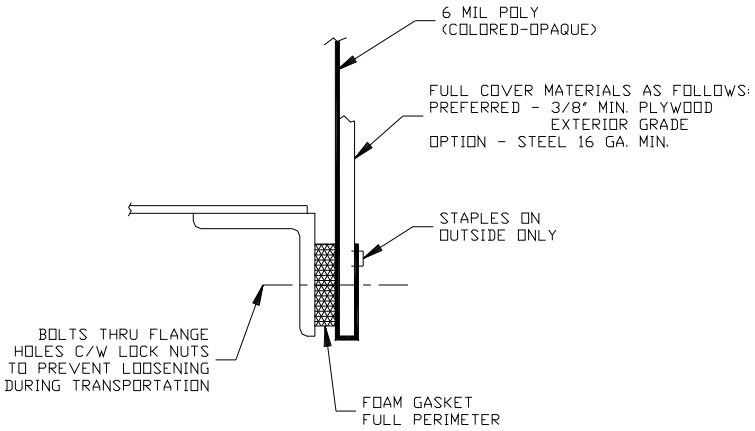

Option 3

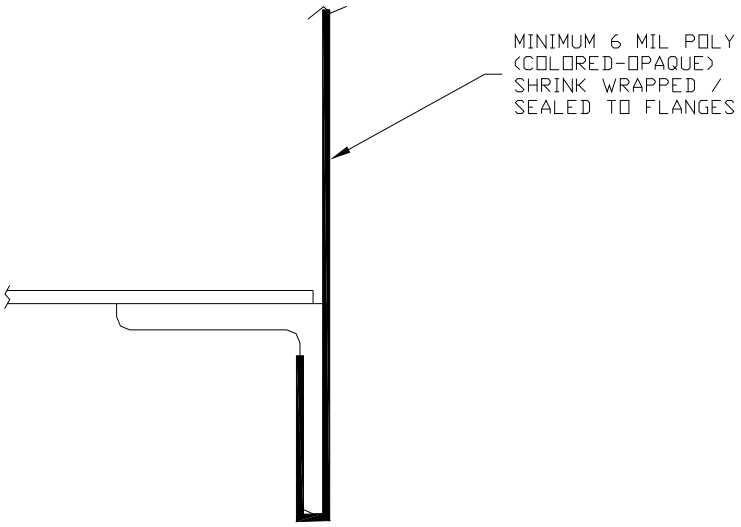

4.3.1.2 **Field Assembled Sections** (Side section thru typical ducting)

Option 1

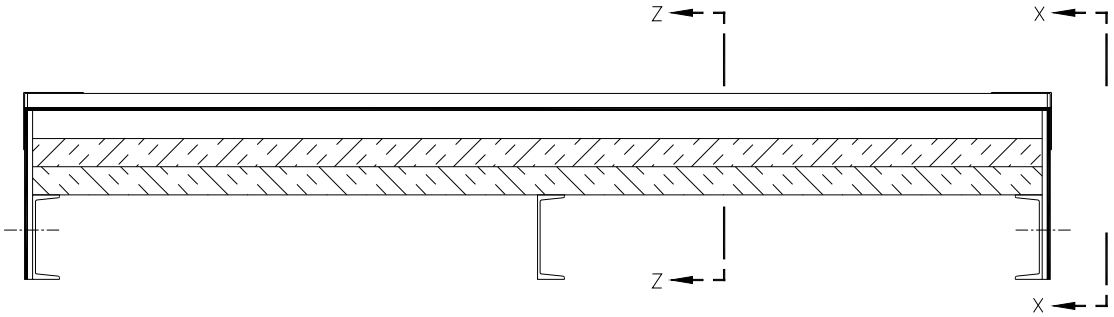

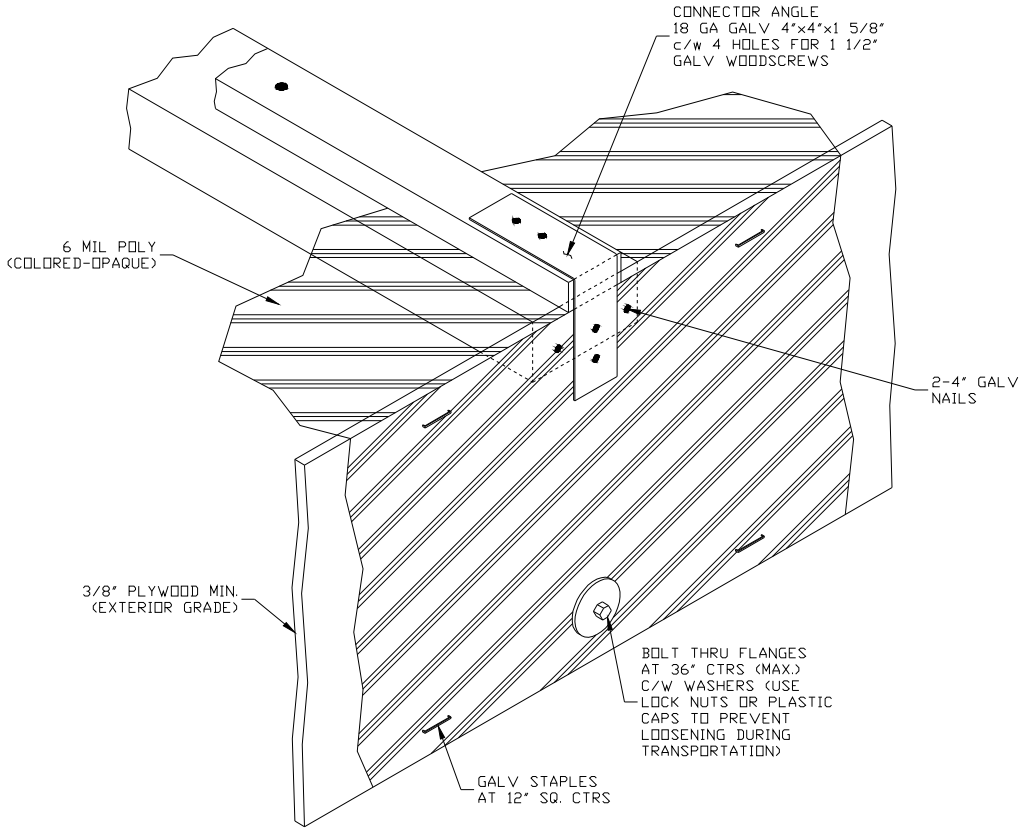

ISO VIEW X-X

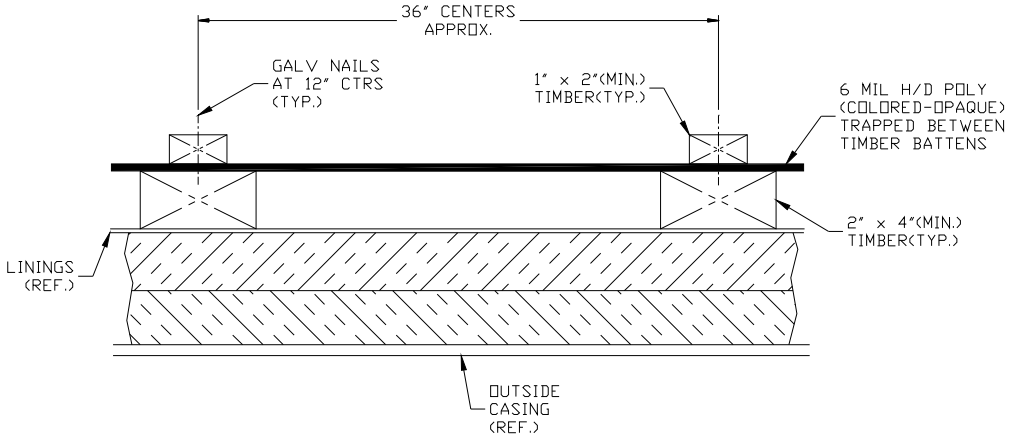

SECTION Z-Z

Option 2

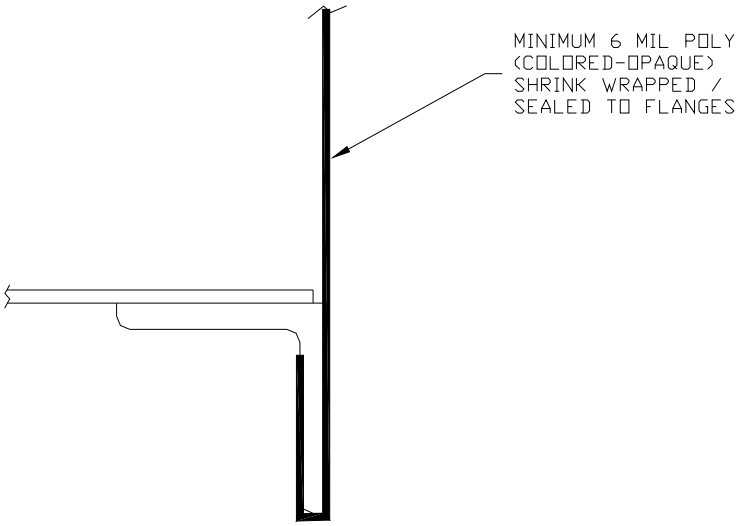

Intake Shrink Wrapped

4.3.2 G.T. Exhaust Systems

4.3.2.1 Complete Assemblies/Small Ducts

Package per instruction 4.3.1.1. Alternatively, the open ends of the ducts may be sealed with 6 mil "shrink-wrap" (without timber framing – as per 4.3.1.1 option 3)

4.3.2.2 Field Assembled Sections

4.3.2.2.1 **Domestic or within Continent Shipments** (Road only)

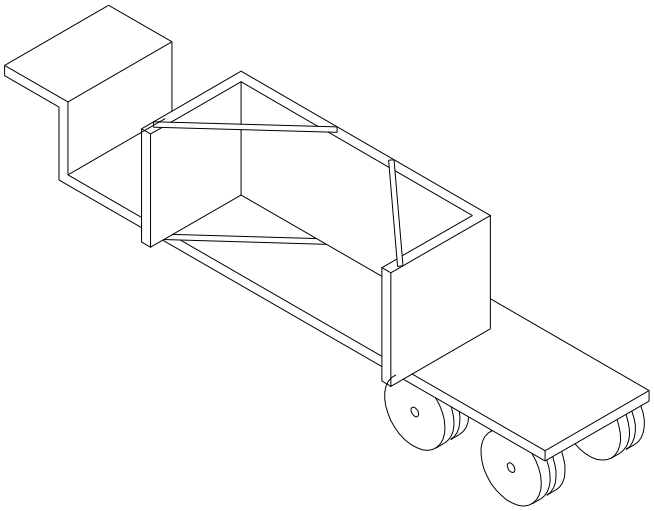

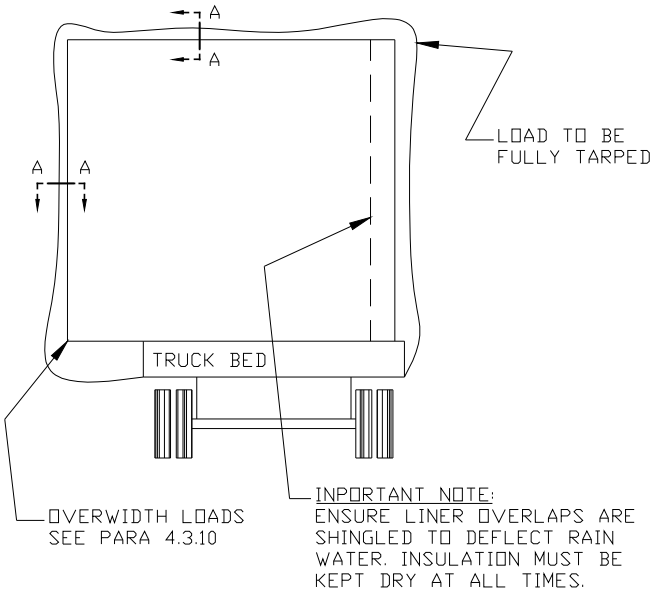

SECTION A-A

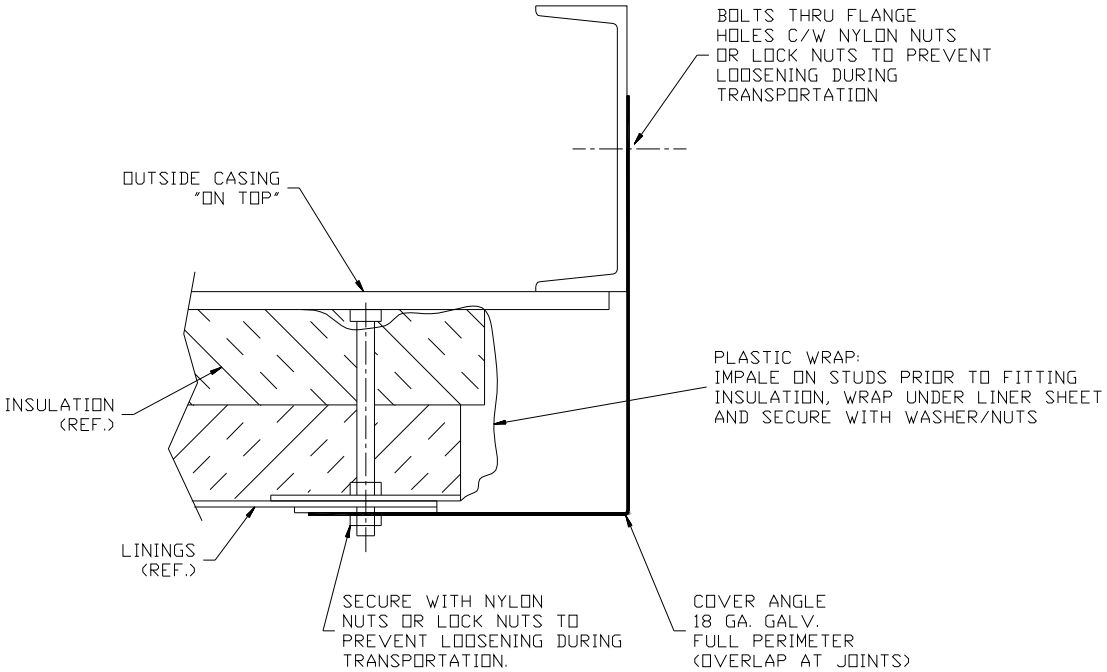

Controlled Document

4.3.2.2.2 **Out of Continent Shipments** (Ocean freight)
Package per instruction 4.3.2.2.1 Sections can be "nested" to save space, but must be tarped to ensure insulations remains dry.

4.3.3 **Silencer Baffles** (When shipped loose for field installation) shall be loaded by the manufacturer on a truck in a staggered pattern to facilitate easy off-loading

4.3.3.1 All baffles, shipped loose for field installation shall have adhesive stickers, see figure 1, affixed to each baffle. A letter size copy of this sticker will also be attached to the bills of lading.

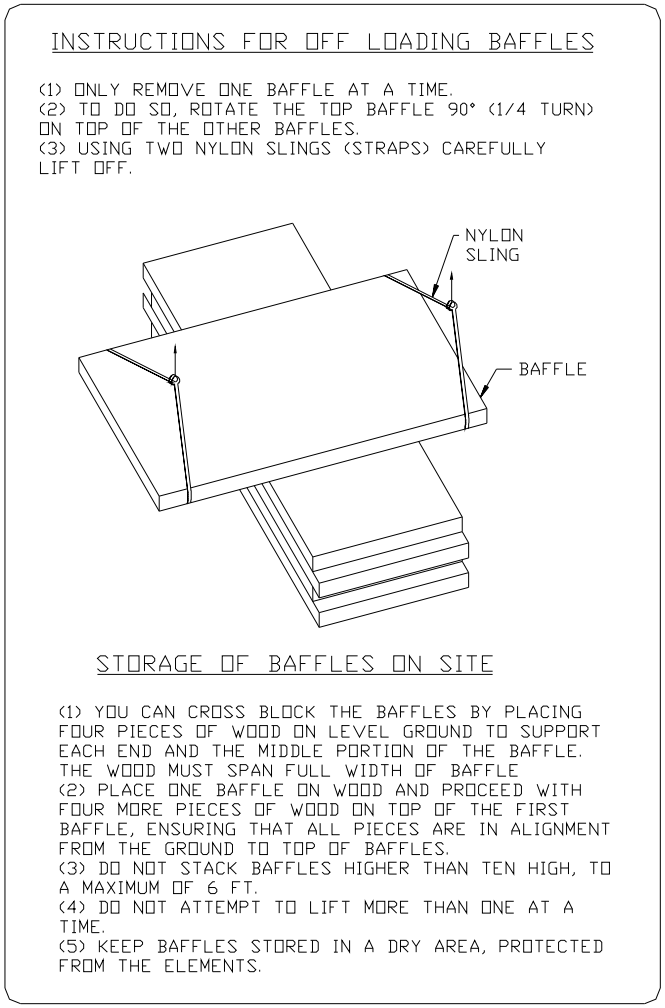

Figure 1

Baffles are supplied with individual shrink-wrap coverings but this is not 100% waterproof
Stacked Baffles should be completely covered with tarps during storage.

4.3.3.2 **Domestic Shipments** (Road only)
Each baffle to be individually "shrink-wrapped" with 6 mil poly. Breather holes to be provided in the edges of the membrane to prevent condensation (3 – 2" dia. per side min). Ship on flatbed trailer and secure with nylon straps.

4.3.3.3 **Out of Continent Shipments** (Ocean freight)
Package per instruction 4.3.3.2 except; ship in freight containers (open top with tarp cover preferred). Baffles should be shipped "on edge" with lifting eyebolts positioned on top.

4.3.4 Steelwork/Platforms
Block and band together to allow manageable lifting and handling.

4.3.5 Ventilation/Miscellaneous Ducts
Packaging per instruction 4.3.2.1.

4.3.6 Openings in Enclosures, Plenums, etc.
Package per instruction 4.3.1.1. (See 4.3.1.1. option 2). Except for roof openings, where the cover must be pitched from one edge to the opposite edge to shed water.

4.3.7 Doors
Doors must be positively secured. Padlock or secure door from inside to prevent accidental opening during transportation.

4.3.8 Windows
Protect from stone chips by covering with corrugated paper and poly, taped or mechanically fastened into position. – Mark "GLASS" on outside surface of covering.

4.3.9 Fans/Dampers/Expansion Joints
Packaging supplied by the sub-vendor must be appropriate for the conditions anticipated. Generally, open framed crates with base skids should be used. Fans should have shrink-wrap covers. Dampers should have loose wrap 6 mil poly within the crate.

4.3.10 Over width Loads
Care must be taken to ensure that equipment that overhangs the trailer is adequately protected. It is essential that road salts, grit, snow, etc. not be allowed to spray up onto insulated linings, perforated linings or any other internal surface, and insulation must be kept dry at all times.

4.4 Preservation

4.4.1 Suppliers will be responsible for providing protection for all products or surfaces susceptible to corrosion. – Verify with ATCOSL prior to applying any non-specified finishes or coatings.

4.4.2 Refer to the contract documents for any special requirements.

4.4.3 Preservation of Flanges

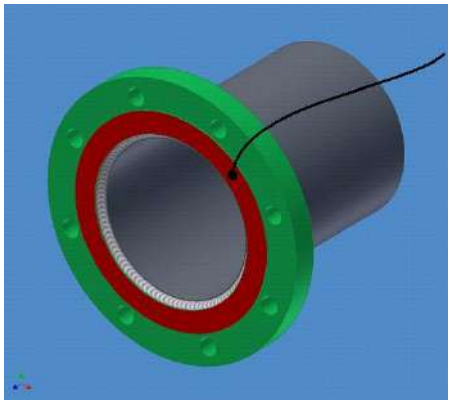

This surface must be protected with a rust preventing substance ie. Tectyle/Cosmoline. It shall also have a cover attached to the flange face to protect it from damage. Covers can be of wood or plastic. Wood covers have to be attached using nuts, bolts and washers. Plastic covers should be specifically designed for the purpose.

4.4.4 In general, flanges that are purchased are coated with a black or green acrylic paint, if for any reason the flange is not painted it must be painted on the edge and back with a suitable primer.

4.5 Delivery (See also 4.3 Packaging for associated instructions)

4.5.1 Supplier may be responsible for the transportation of the equipment to the destination. Refer to the contract documents for details.

4.5.2 Suppliers will be responsible for the condition of the equipment until it is received and accepted by the job site or client, if para. 4.5.1 is applicable.

4.5.3 Suppliers are responsible for ensuring that all braces, covers, non welded liner bolts, packaging, hardware, etc. are positively attached for shipping and cannot vibrate loose during delivery.

5.0 *References*

- Material Data Sheets

RECORD OF REVISION			
Rev Level	**Description of Revision**	**Author**	**Revision Date**
A	Initial Issue	T. Martin	1997-01-28
B	Revised entire document	T. Martin	1999-08-18
C	Instruction number was QM-STD-0004	T. Martin	1999-09-15
D	Revised 4.3.3 Paragraphs	R. Skeard	2001-10-15
E	General Revision	R. Skeard	2002-09-24
F	Revised 4.3.3	R. Skeard	2002-10-07
G	General Revision	R. Skeard	2003-02-12
H	Added Pipe protection	V. Balge	2004-02-12
I	Name and Logo change	D. Johnston	2010-01-28
J	Name and Logo change	D. Johnston	2010-06-23

Handling, and Long Term Storage. (Over 3months, up to 48 months)

Quality Manufacturing Manual

1.0 Scope

1.1 This instruction covers the ATCO Structures & Logistics requirements for the handling, and long term storage of all equipment.

2.0 Purpose

2.1 The purpose of this instruction is to provide the client or end user with the minimum ATCO Structures & Logistics requirements.

2.2 Any special requirements will be described in the contract documents.

3.0 Responsibility

3.1 It is the responsibility of the client or end user to implement these instructions for all equipment.

4.0 Instruction

4.1 Handling

4.1.1 Lifting lugs shown on the ATCO Structures & Logistics drawings are provided for installation use only. Use of these lugs by the client or end user must be as per the contract lifting drawings or as a minimum as shown below. Spreader beams if required are not supplied by ATCOSL.

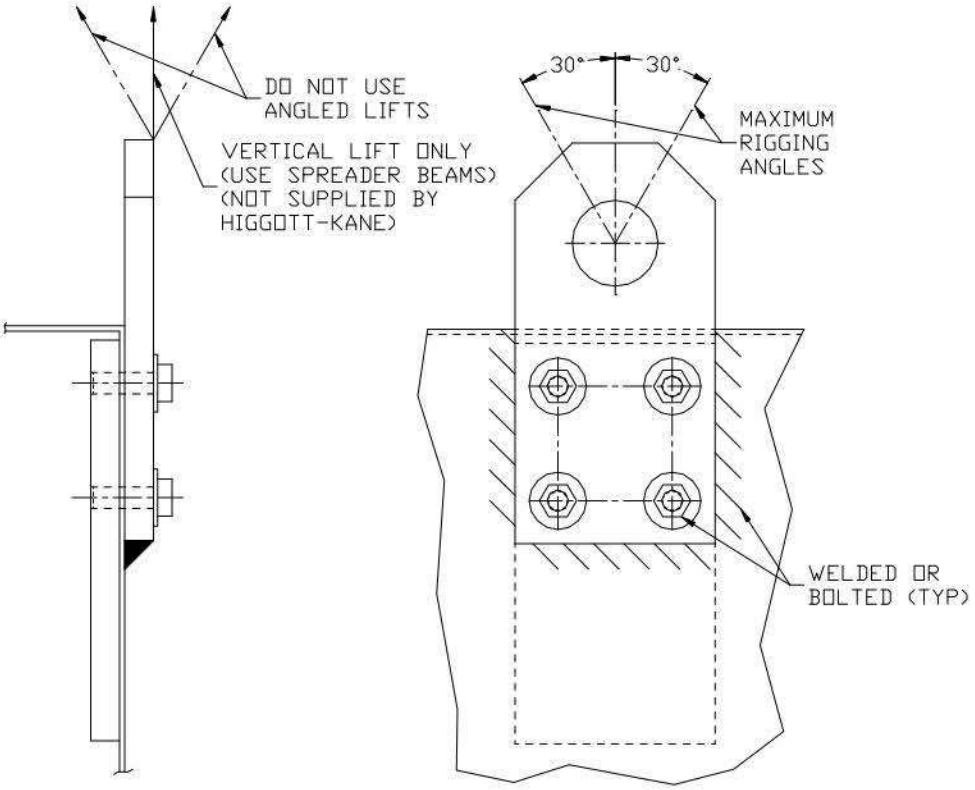

4.1.2 Client or end user requiring special handling techniques may contact ATCO Structures & Logistics for engineering direction on an as required basis.

4.1.3 Shipping braces and beams must be installed during all handling when specified by the ATCO Structures & Logistics drawings. All temporary items should be painted yellow. Braces must be positively secured with nylon nuts or locknuts to prevent loosening during transportation.

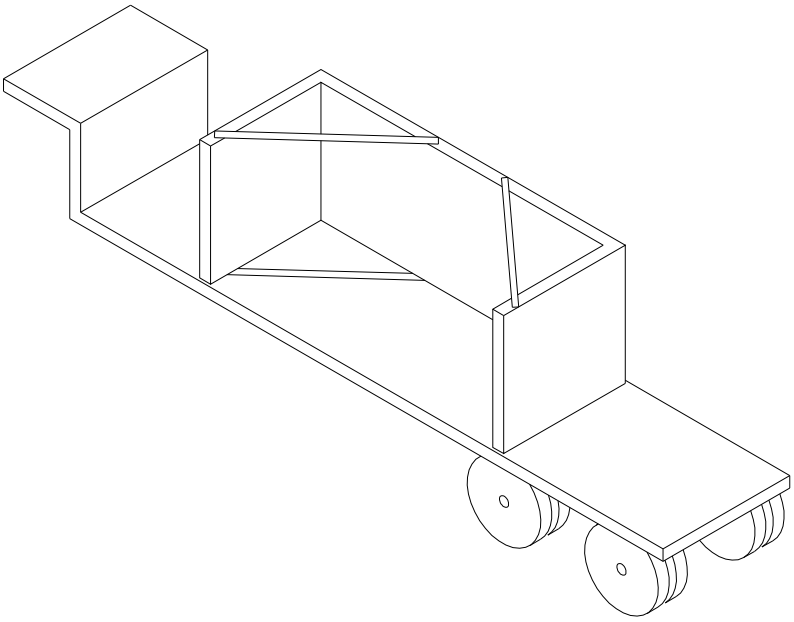

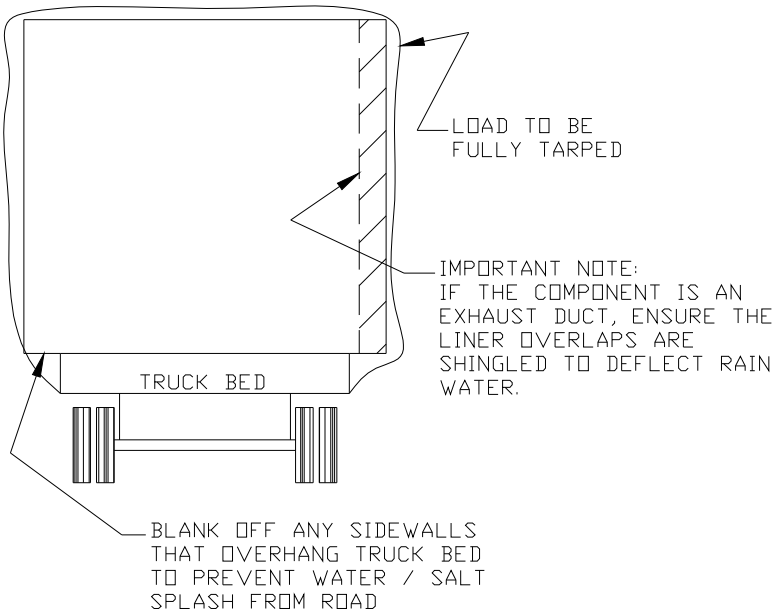

4.1.4 Every precaution shall be taken to ensure that the insulation is not allowed to become wet during handling / storage or transportation.

4.2 Storage

4.2.1 Storage may be required for periods of up to 48 months from contract delivery date.

4.2.2 Insulation in lined ducts must be kept as dry as possible at all times. Store ducting with liners protected against rain or fully tarp while in storage.

4.2.3 Outdoor storage shall provide for “high and dry” storage of the products and consist of a secure, fully fenced compound with gated access.

4.2.4 Damage to products due to vandalism or accidents will be the responsibility of the client / end user.

4.2.5 Painted surfaces are warranted for 12 months, unless contract specifies otherwise.
Damage due to handling, accidents, vandalism or acid rain is not covered under this warranty.
Damage to paint color due to U.V exposure or acid rain is not covered under this warranty.
Painted surfaces should be inspected every 6 months.

4.2.6 Areas of components, protected by weldable primer are not subject to this warranty. Some minor corrosion is expected in these areas and will require surface preparation and painting after field welding.

4.2.7 Stainless steel surfaces should be protected at all times with tarps or covers.

4.2.8 Refer to the contract documents for special requirements (if applicable).

4.3 Weather Protection

The following components are supplied prepackaged for storage up to 3 months from manufacture. For long term storage and U.V. protection, the components should be fully tarped. Tarps should be overlapped and tied down securely. Horizontal surfaces should be peaked for drainage.

4.3.1 G.T. Intake Systems

To maintain compliance with the critical cleanliness requirements for G.T. Intake Systems, special attention is needed to provide adequate protection and sealing of the components, during storage.

4.3.1.1 Complete Assemblies/Small Ducts

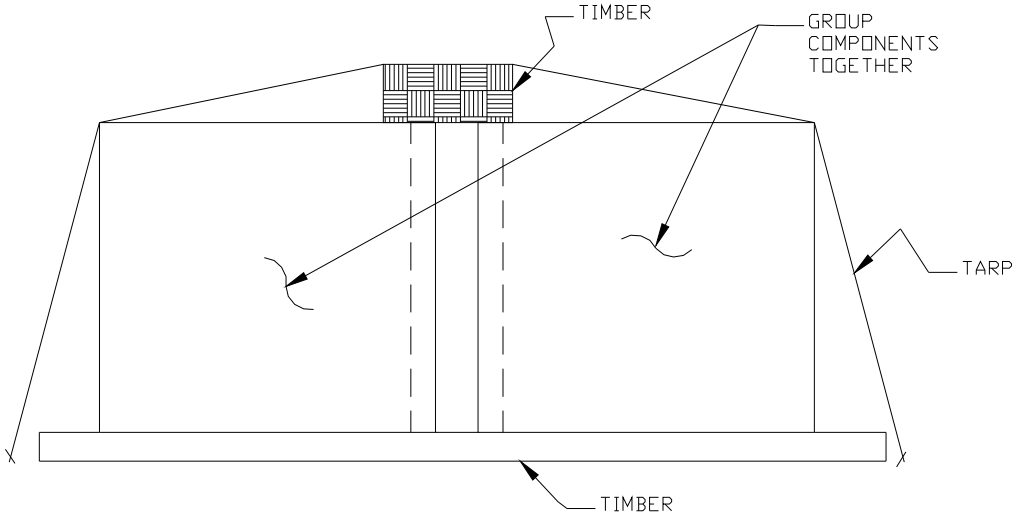

4.3.1.2 Large field assembled sections

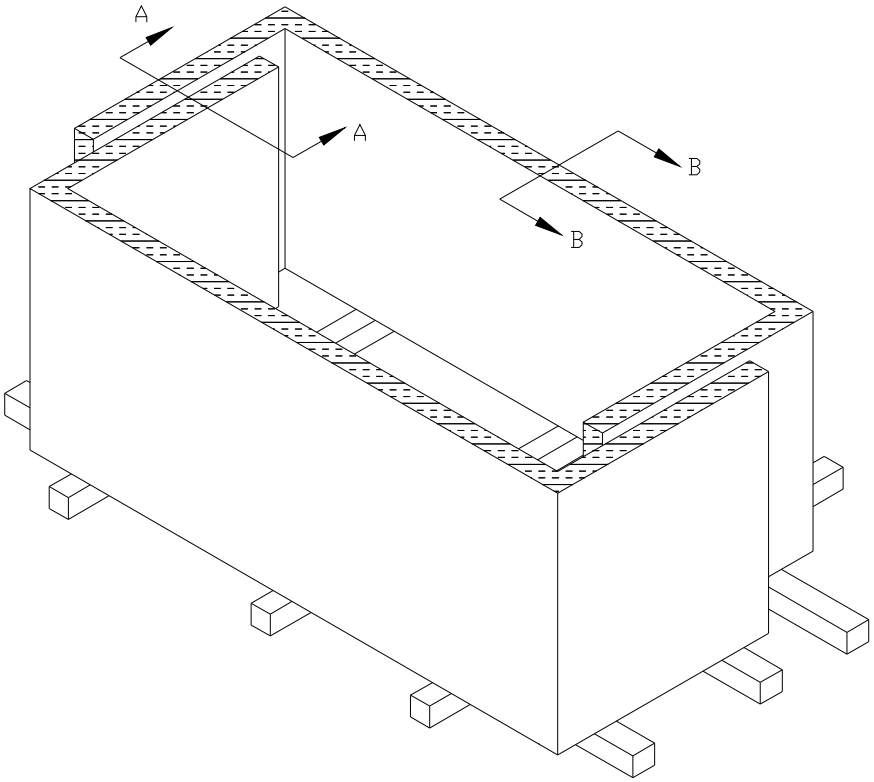

COMPONENTS SHOULD BE
NESTED FOR PROTECTION

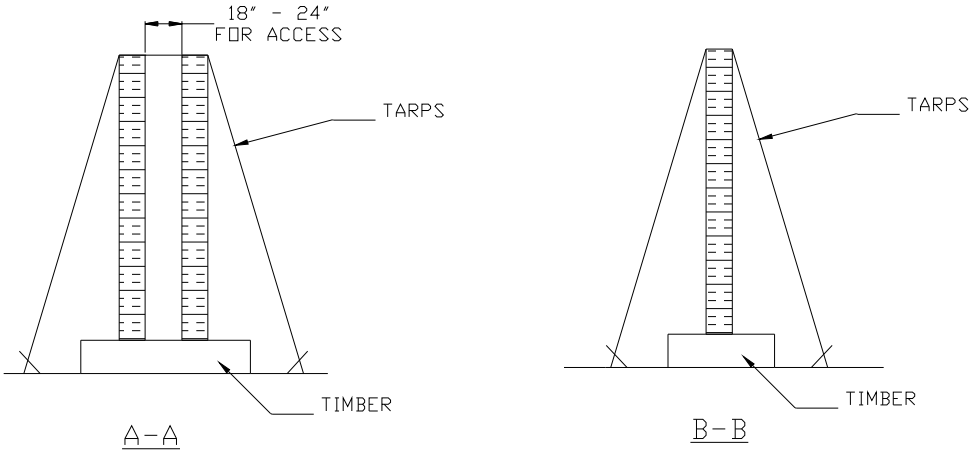

4.3.1.3 Inspection of the stored components should take place every 6 months by the client / end user with a brief written report issued to ATCO Structures & Logistics.

4.3.1.4 If any original covers or poly sealing membranes are damaged, they must be repaired to maintain the original system protection.

4.3.2 G.T. Exhaust Systems

4.3.2.1 **Complete Assemblies/Small Ducts**
Storage per instruction 4.3.1.1.

4.3.2.2 **Large Field Assembled Sections**
Storage as per instruction 4.3.1.2

4.3.3 Silencer Baffles

(When shipped loose for field installation) shall be loaded by the manufacturer on a truck in a staggered pattern to facilitate easy off-loading

4.3.3.1 All baffles, shipped loose for field installation shall have adhesive sticker, see figure 1, affixed to each baffle. A letter size copy of these stickers will also be attached to the bills of lading. Handling and storage shall comply with these instructions

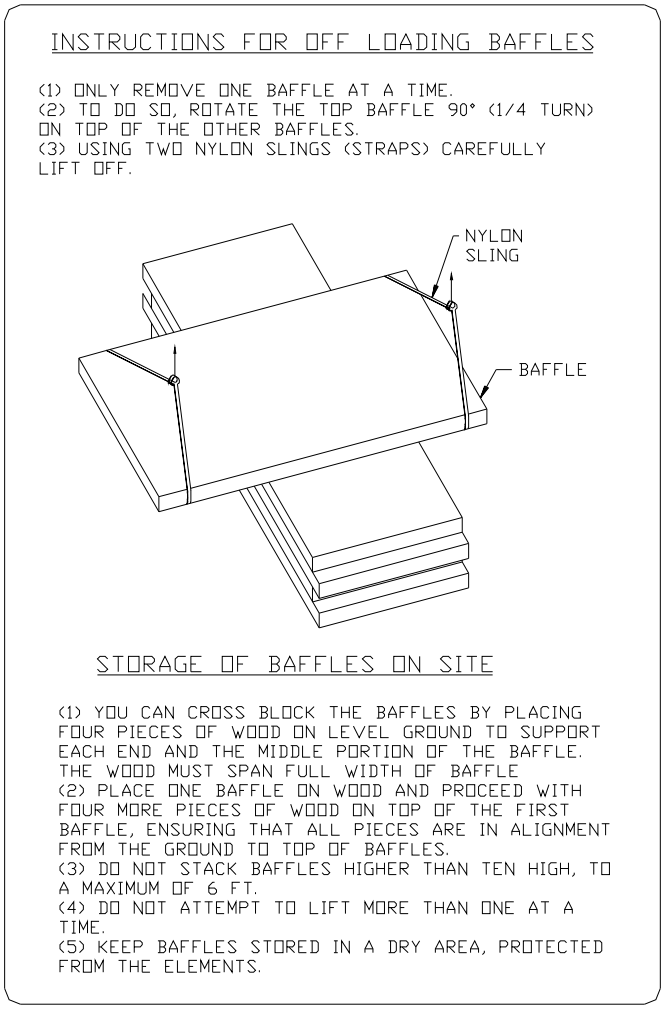

Figure 1

Baffles are supplied with individual shrunk-wrapped coverings, but this is not 100% waterproof. Stacked baffles should be completely covered with tarps during storage.

4.3.3.2 If baffles are shipped installed in the silencer casings, the entire assembly shall be tarped and stored as per 4.3.1.1

4.3.4 Steelwork/Platforms
Block high and dry and store separated to allow for inspection access. Tarps are not required.

4.3.5 Ventilation/Miscellaneous Ducts
Store per instruction 4.3.1.1.

4.3.6 Enclosures, Plenums, etc.
Store high and dry on timbers and provide full tarp as per 4.3.1.1

4.3.7 Doors
Doors must be positively secured. Padlock or secure door from inside to prevent accidental opening during storage or handling.

4.3.8 Windows
Protect from stone chips by covering with corrugated paper and poly, taped or mechanically fastened into position. Mark “GLASS” on outside of covering.

4.3.9 Fans/Dampers/Expansion Joints or other electro/mechanical components shall be stored indoors in a climate-controlled environment. All long-term storage instructions from the OEM shall be adhered too.

4.3.10 Hardware / Gaskets should be stored, unopened in the original packing crate and covered with tarps.

4.3.11 Bundles of insulation shall be neatly stacked high and dry and covered with tarps.

4.4 Preservation

4.4.1 Client / end user will be responsible for providing protection for all products or surfaces susceptible to corrosion. Any scratches, dings or other damage to the paint or primer shall be touched up suitable for length of storage.

4.4.2 Refer to the contract documents for any special requirements.

4.5 Delivery

4.5.1 Client / end user may be responsible for the transportation of the equipment to the destination. Refer to the contract documents for details.

4.5.2 Client / end user will be responsible for the condition of the equipment during shipment, until it is received and accepted by the job site or client, if paragraph 4.5.1 is applicable.

4.5.3 Client / end user is responsible for ensuring that all braces, covers, non welded liner bolts, packaging, hardware, doors etc. are positively attached for shipping and cannot vibrate loose during delivery.

5.0 ***References***

RECORD OF REVISION			
Rev Level	**Description of Revision**	**Author**	**Revision Date**
A	Initial Issue	R. Skeard	2003-02-12
B	Name and Logo change	D. Johnston	2010-01-28
C	Name and Logo change	D. Johnston	2010-06-23